# CONSTRUCTION INFRASTRUCTURE DRAWINGS

# PARKER RIDGE

## 82 SCHOOL STREET
## ROLESVILLE, NORTH CAROLINA 27571

PSP-23-02
CID-23-06

| SITE DATA TABLE | | |
|---|---|---|
| OWNER | W. HAROLD PARKER JR./ ROLESVILLE DEVELOPMENT, LLC | |
| DEVELOPER | LENNAR OF CAROLINAS, LLC | |
| PIN # | AREA (SF) | AREA (AC) |
| 1758988411 | 2,592,300 | 59.51 |
| 1758983710 | 17,121 | 0.39 |
| 1758884270 E | 310,215 | 7.12 |
| 1758884270 W | 865,243 | 19.86 |
| GROSS AREA | 3,784,879 | 86.89 |
| PARCEL A - PARK EXPANSION AREA | 65,340 | 1.50 |
| NET AREA | 3,719,539 | 85.39 |
| IMPERVIOUS EXISTING | 2,885 | 0.07 |
| IMPERVIOUS PROPOSED | 1,819,937 | 41.78 |
| PREVIOUS ZONING | RL | |
| USE | VACANT / AG | |
| FUTURE LAND USE DESIGNATION (ROLESVILLE COMP PLAN) | HDR | |
| CURRENT ZONING | RH/RM CLUSTER CONDITIONAL | |
| PROPOSED USE | RESIDENTIAL | |
| SETBACKS MINIMUM RM (CLUSTER) | SINGLE-FAMILY DETACHED | |
| FRONT | 20' | |
| SIDE | 5' | |
| CORNER SIDE | 10' | |
| REAR | 20' | |
| MIN FRONT LOT WIDTH | 40' | |
| MIN LOT AREA | 5,000 SF | |
| MIN LOT AREA PROPOSED: | 5,021 SF | |
| RM-CZ CLUSTER (SINGLE FAMILY DETACHED) | | |
| | AREA (SF) | AREA (AC) |
| FINAL TRACT AREA | 2,521,614 | 57.89 |
| TOTAL UNITS | 161 | |
| PROPOSED DENSITY (DU/AC) | 2.8 | |
| MAXIMUM DENSITY (DU/AC) | 5 | |
| PUBLIC GREENWAY (EST. 30' ESTM WIDTH) | 150,754 | 3.46 |
| CLUSTER OPEN SPACE PROVIDED 12% | 252,161 | 5.79 |
| PROVIDED OPEN SPACE | 1,431,382 | 32.86 |
| MAX BUILDING HEIGHT | 35 | ft |
| SETBACKS MINIMUM RH - CZ (TOWNHOMES) | | |
| FRONT | 15' | |
| PARKING SETBACK FOR TOWNHOMES* | 19' | |
| BUILDING SEPARATION | 30' | |
| SIDE | 10' | |
| CORNER SIDE | 15' | |
| REAR | 15' | |
| MIN FRONT LOT WIDTH | 20' | |
| MIN LOT AREA | 2,000 SF | |
| MIN LOT AREA PROPOSED: | 2,054 SF | |
| RH-CZ (TOWNHOMES) | | |
| | AREA (SF) | AREA (AC) |
| FINAL TRACT AREA | 1,197,925 | 27.50 |
| GROSS TRACT AREA | 628,146 | 14.42 |
| NOTE: SEE PHASING PLAN (C2-7) FOR MAP VIEW OF GROSS TRACT AREA | | |
| LOT AREA | 330,922 | 7.60 |
| TOTAL UNITS | 114 | |
| PROPOSED DENSITY (DU/AC) | 4.1 | |
| MAXIMUM DENSITY (DU/AC) | 9 | |
| MAX BUILDING HEIGHT | 35 | ft |

### IMPERVIOUS AREA CALCULATIONS

| POST-DEVELOPMENT IMPERVIOUS AREAS | # | UNIT |
|---|---|---|
| PAVEMENT | 23.07 | AC |
| SIDEWALK | 3.35 | AC |
| LOTS - TOWNHOMES | 5.7 | AC |
| LOTS - SINGLE-FAMILY (MAX.) | 9.66 | AC |
| | 41.78 | AC |

### OPEN SPACE CALCULATIONS

| RH DISTRICT OPEN SPACE CALCULATIONS | | |
|---|---|---|
| RH DISTRICT AREA | 27.50 | AC |
| REQUIRED OPEN SPACE (15%) | 4.13 | AC |
| PROVIDED OPEN SPACE | 10.97 | AC |
| REQUIRED ACTIVE OPEN SPACE (50% OF OPEN SPACE) | 2.06 | AC |
| PROVIDED ACTIVE OPEN SPACE | 2.13 | AC |
| REQUIRED PASSIVE OPEN SPACE | 2.06 | AC |
| PROVIDED PASSIVE OPEN SPACE | 8.84 | AC |

| RM CLUSTER DISTRICT OPEN SPACE CALCULATIONS | | |
|---|---|---|
| RM CLUSTER DISTRICT AREA | 57.89 | AC |
| REQUIRED TOTAL OPEN SPACE (12%) | 6.95 | AC |
| PROVIDED TOTAL OPEN SPACE | 18.57 | AC |
| REQUIRED ACTIVE OPEN SPACE (50% OF REQUIRED OPEN SPACE) | 3.47 | AC |
| PROVIDED ACTIVE OPEN SPACE | 3.51 | AC |
| REQUIRED PASSIVE OPEN SPACE | 3.47 | AC |
| PROVIDED PASSIVE OPEN SPACE | 15.06 | AC |

**PARKING CALCULATIONS**

| WEST SIDE | | | | DRIVEWAY | GUEST | OFFSITE | TOTAL | TOTAL |
|---|---|---|---|---|---|---|---|---|
| STREET | # UNITS | SINGLE DW | DOUBLE DW | PROVIDED | REQD | REQD | REQD | PROVIDED |
| TREE MOSS CT | 38 | 24 | 14 | 52 | 10 | 34 | 86 | 90 |
| ALLEY 2 | 8 | 0 | 8 | 16 | 3 | 2 | 18 | 19 |
| ALLEY 3 | 9 | 0 | 9 | 18 | 7 | 3 | 21 | 25 |
| **EAST SIDE** | | | | | | | | |
| CARVED STONE CT | 13 | 7 | 6 | 19 | 4 | 11 | 30 | 31 |
| ALLEY 4 | 12 | 0 | 12 | 24 | 3 | 3 | 27 | 27 |
| ALLEY 1 | 20 | 0 | 20 | 40 | 5 | 5 | 45 | 45 |
| GRANITE KNOLL CT | 14 | 8 | 6 | 20 | 4 | 12 | 32 | 32 |
| FUTURE CLUBHOUSE* | | | | | | | 6 | 6 |
| **TOTAL** | | | | **189** | **36** | **70** | **265** | **275** |

PARKING REQUIRED IS 2/DU + 0.25 GUEST SPACES /DU
*PROPOSED CLUBHOUSE IS 1,000 SF &MINIMUM PARKING IS 5 + 1/1000 SF FOR OUTDOOR RECREATION ROUNDED UP.

| WATER AND SEWER INFRASTRUCTURE QUANTITIES | | | |
|---|---|---|---|
| | PHASE 1A | PHASE 1B | PHASE 2 |
| NUMBER OF LOTS | 55 | 142 | 78 |
| LOT NUMBERS BY PHASE | 1 TO 55 | 56 TO 197 | 198 TO 275 |
| LIVABLE BUILDINGS | 55 | 142 | 78 |
| OPEN SPACE? | YES | YES | YES |
| PUBLIC WATER (LF) | 2235 | 4491 | 2576 |
| PUBLIC SEWER (LF) | 863 | 4293 | 2206 |
| WATER SERVICE STUBS | 56 | 143 | 78 |
| SEWER SERVICE STUBS | 55 | 143 | 78 |

TOWN OF ROLESVILLE CASE NUMBER: PSP23-02
PREVIOUS REZONING APPLICATION: MA22-03

TOWN OF ROLESVILLE
1ST SUBMITTAL: JUNE 1, 2023
FINAL SUBMITTAL: MARCH 4, 2024

WAKE COUNTY
1ST SUBMITTAL: OCTOBER 12, 2023
FINAL SUBMITTAL: JANUARY 12, 2024

CID REVISION (ROLESVILLE)
1ST SUBMITTAL: JANUARY 2, 2025
2ND SUBMITTAL: MARCH 24, 2025

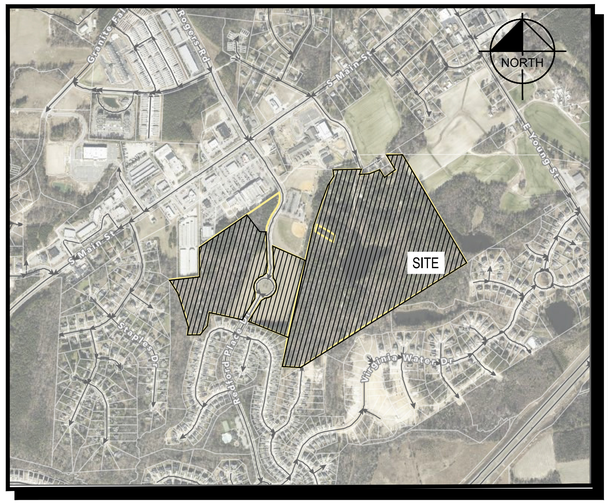


SITE LOCATION MAP
NOT TO SCALE

Rolesville
Genuine Community • Capital Connection • Est. 1837
Planning

CID-23-06 / Construction Infrastructure Drawing / Parker Ridge
**APPROVED**
Date: March 12, 2024

Town of Rolesville Planning Department

***ATTENTION CONTRACTORS***

The ***Construction Contractor*** responsible for the extension of water, sewer, and/or reuse, as approved in these plans, is responsible for ***contacting*** the ***Public Utilities Department*** at ***(919) 996-4540*** at least ***twenty four hours*** prior to beginning any of their construction.

***Failure*** to notify both ***City Departments*** in advance of beginning construction, will result in the issuance of ***monetary fines***, and require reinstallation of any water or sewer facilities not inspected as a result of this notification failure.

***Failure*** to call for ***Inspection***, ***Install a Downstream Plug***, have ***Permitted Plans*** on the ***Jobsite***, or any other ***Violation of City of Raleigh Standards*** will result in a ***Fine and Possible Exclusion*** from future work in the ***City of Raleigh***.

CORPUD APPROVAL CONDITION:
CONVEYANCE OF SEWAGE FROM LOTS WITHIN PHASES 1B AND 2A ARE RELYING ON IMPROVEMENTS TO THE HARRIS CREEK INTERCEPTOR THAT ARE BEING DESIGNED BY MCADAMS (THE POINT) AND AMERICAN ENGINEERING (KALLAS FALLS). THE PLAN SET BY MCADAMS IS TITLE HARRIS CREEK INTERCEPTOR IMPROVEMENTS AND HAS AN ASSIGNED PERMIT NUMBER OF S-4979. THE PLAN SET BY AMERICAN ENGINEERING IS TITLED HARRIS CREEK SANITARY SEWER REPLACEMENT AND HAS AN ASSIGNED PERMIT NUMBER OF S-5037. LOTS WITHIN PARKER RIDGE PHASES 1B AND 2A WILL NOT BE RECORDED AND THE ONSITE WATER/SEWER UTILITIES WILL NOT BE ACCEPTED BY RALEIGH UNTIL THE HARRIS CREEK INTERCEPTOR IMPROVEMENTS UNDER PERMITS S-4979 AND S-5037 ARE APPROVED, INSTALLED AND ACCEPTED BY RALEIGH FOR MAINTENANCE.

CONDITION NO. 13 OF ZONING CASE MA 22-03 WILL BE FULFILLED BY A PAYMENT IN LIEU OF CONSTRUCTION OF THE IMPROVEMENTS DESCRIBED IN CONDITION NO. 13. THE ENGINEER'S OPINION OF THE PROBABLE CONSTRUCTION COST SHALL BE SUBMITTED TO THE TOWN PRIOR TO THE ISSUANCE OF THE 105TH BUILDING PERMIT. PAYMENT OF 125% OF THE PROBABLE CONSTRUCTION COST SHALL BE SUBMITTED BY THE ISSUANCE OF THE 138TH BUILDING PERMIT. THE AMOUNT PAID WILL BE FURTHER ADJUSTED BASED ON THE CONSUMER PRICE INDEX (CPI) CHANGE FROM THE TIME OF SUBMISSION OF THE ENGINEER'S OPINION OF THE PROBABLE CONSTRUCTION COST TO THE TIME OP PAYMENT.

### PARKER RIDGE SUBDIVISION ZONING CONDITIONS

1. DEVELOPMENT OF THE PROPERTY SHALL BE IN SUBSTANTIAL CONFORMANCE WITH THE ACCOMPANYING EXHIBIT C CONCEPT PLAN, LOCATIONS SHOWN FOR COMMITTED ELEMENTS INCLUDING, BUT NOT LIMITED TO GREENWAYS, STREETS, AND OPEN AREAS SHOWN ON EXHIBIT C, ARE CONCEPTUAL AND PROVIDED FOR ILLUSTRATION AND CONTEXT ONLY. FINAL LOCATIONS OF ELEMENTS SHALL BE DETERMINED AT SUBSEQUENT STAGES OF APPROVAL. DEVELOPER SHALL BE ENTITLED TO A CREDIT AGAINST THE PROJECT'S PARKS AND RECREATION FEES FOR THE COSTS TO CONSTRUCT PUBLIC GREENWAYS.
2. THE FOLLOWING USES SHALL BE PROHIBITED ON THE PORTION OF THE PROPERTY ZONED RESIDENTIAL HIGH DENSITY (THE "RH PARCEL"):
   A. LIVE-WORK UNIT
   B. RESIDENTIAL CARE (ALF, ILF, CCF)
   C. TELECOMMUNICATIONS TOWER
3. THE RH PARCEL SHALL HAVE A MAXIMUM OF 120 TOWNHOUSE DWELLINGS.
4. THE FOLLOWING USES SHALL BE PROHIBITED ON THE PORTION OF THE PROPERTY ZONED RESIDENTIAL MEDIUM DENSITY (THE "RM PARCEL"):
   A. TELECOMMUNICATIONS TOWER
5. THE RM PARCEL SHALL HAVE A MAXIMUM OF 170 SINGLE-FAMILY DETACHED DWELLINGS.
6. A SINGLE FAMILY DETACHED HOME SHALL BE DEVELOPED AND DONATED AS PART OF WOUNDED WARRIOR HOMES. OPERATION COMING HOME, OPERATION FINALLY HOME, OR SIMILAR ORGANIZATION PROVIDING HOMES TO VETERANS. DEVELOPER SHALL BE ENTITLED TO A WAIVER OF ALL TOWN OF ROLESVILLE PERMIT FEES FOR THIS HOME.
7. THE DEVELOPMENT SHALL INCLUDE AT LEAST ONE POLLINATOR GARDEN. THE POLLINATOR GARDEN SHALL BE A LANDSCAPED GARDEN IN WHICH AT LEAST SEVENTY FIVE PERCENT (75%) OF ALL PLANTS, EXCLUDING GRASSES, ARE NATIVE MILKWEEDS AND OTHER NECTAR-RICH FLOWERS.
8. PERIMETER BUFFERS SHALL BE PROVIDED AS SHOWN ON THE CONCEPT PLAN. TYPE 3 AND TYPE 4 PERIMETER BUFFERS MAY INCLUDE 6' FENCES INSTEAD OF WALLS.
9. ALL SINGLE FAMILY DETACHED DWELLINGS SHALL HAVE THE FOLLOWING FEATURES:
   A. A 2 CAR GARAGE;
   B. ALL GARAGE DOORS SHALL HAVE WINDOWS;
   C. GROUND FLOOR ELEVATION AT THE FRONT DOOR SHALL BE A MINIMUM OF 12" ABOVE AVERAGE GRADE ACROSS THE FRONT FAÇADE OF THE HOUSE.
   D. A MINIMUM 24" STONE OR MASONRY WATER TABLE ALONG THE FRONT ELEVATION;
   E. IF MASONRY IS NOT THE PREDOMINANT FIRST FLOOR FINISH, THEN THE FRONT ELEVATION SHALL HAVE 2 TYPES OF SIDING. FOR EXAMPLE, HORIZONTAL SIDING MAY BE COMBINED WITH SHAKE/BOARD AND BATTEN;
   F. ROOF PITCHES ON THE MAIN ROOF WILL HAVE A PITCH BETWEEN 5 ON 12 AND 12 ON 12;
   G. ROOF MATERIALS SHALL BE ASPHALT SHINGLES, METAL, COPPER OR WOOD;
   H. MINIMUM 12" FRONT OVERHANGS;
   I. A COVERED STOOP OR PORCH AT LEAST 20 SF AND 5 FT DEEP;
   J. ALL WINDOWS ON FRONT FACADES SHALL HAVE SHUTTERS OR WINDOW TRIM;
   K. A MINIMUM 64 SF REAR PATIO;
   L. AT LEAST ONE WINDOW ON EACH SIDE ELEVATION;
   M. NO SINGLE FAMILY DETACHED HOME SHALL BE CONSTRUCTED WITH A FRONT ELEVATION OR COLOR PALETTE THAT IS IDENTICAL TO THE HOME ON EITHER SIDE OF IT OR DIRECTLY ACROSS FROM IT; AND
   N. A VARIED COLOR PALETTE SHALL BE USED THROUGHOUT THE SUBDIVISION.
10. ALL TOWNHOUSE DWELLINGS SHALL HAVE THE FOLLOWING FEATURES:
   A. A 1 OR 2 CAR GARAGE;
   B. A MINIMUM 24" STONE OR MASONRY WATER TABLE ALONG THE FRONT ELEVATION;
   C.IF MASONRY IS NOT THE PREDOMINANT FIRST FLOOR FINISH, THEN THE FRONT ELEVATION SHALL HAVE 2 TYPES OF SIDING. FOR EXAMPLE, HORIZONTAL SIDING MAY BE COMBINED WITH SHAKE/BOARD AND BATTEN;
   D. ROOF MATERIALS SHALL BE ASPHALT SHINGLES, METAL, COPPER OR WOOD;
   E. MINIMUM 12" FRONT OVERHANGS;
   F. A COVERED STOOP OR PORCH AT LEAST 20 SF AND 5 FT DEEP;
   G. SHUTTERS OR WINDOW TRIM SHALL BE ON FRONT FAÇADE WINDOWS;
   H. A MINIMUM 64 SF REAR PATIO SHALL BE PROVIDED ON FRONT LOADED TOWNHOUSES;
   I. AT LEAST ONE WINDOW ON EACH SIDE ELEVATION (EXCLUDING INTERIOR UNITS);
   J. NO TOWNHOUSE SHALL BE PAINTED A COLOR THAT IS IDENTICAL TO THE HOME ADJACENT ON EITHER SIDE OF IT; AND
   K. A VARIED COLOR PALETTE SHALL BE USED THROUGHOUT THE SUBDIVISION.
11. THE DEVELOPER SHALL OFFER TO DEDICATE THE SECTION OF LAND LABELED AS "PARCEL - A - TOWN OF ROLESVILLE PARK EXPANSION" ON THE CONCEPT PLAN FOR USE AS A PUBLIC PARK. THIS LAND SHALL COUNT TOWARD OPEN SPACE REQUIREMENTS FOR THE OVERALL DEVELOPMENT.
12. THE PROJECT SHALL HAVE A PUBLIC GREENWAY STUBBED TO THE 307 S. MAIN STREET PROPERTY LINE NEAR "ACCESS C". AS SHOWN ON THE "PARKER RIDGE TRAFFIC IMPACT ANALYSIS" PREPARED BY STANTEC CONSULTING SERVICES, INC., DATED FEBRUARY 2, 2023 (THE "TIA"), NOTWITHSTANDING THE FOREGOING, THE PROJECT SHALL NOT HAVE A PUBLIC STREET ACCESS TO SCHOOL STREET.
13. DEVELOPER SHALL DESIGN AND CONSTRUCT: (1) THE PUBLIC COLLECTOR STREET IDENTIFIED AS ACCESS D IN THE TIA THAT EXTENDS THE STREET NETWORK WITHIN THE DEVELOPMENT THROUGH WAKE COUNTY PIN 1768-09-8727 (THE "CAMPUS SITE") TO E YOUNG STREET ("ACCESS D ROUTE"); AND (2) A NORTHBOUND LEFT TURN LANE WITH 75 FEET OF FULL-WIDTH STORAGE AND APPROPRIATE TAPER FROM YOUNG STREET TO ACCESS D AS RECOMMENDED BY THE TIA ("TURN LANE") (ACCESS D ROUTE AND TURN LANE ARE COLLECTIVELY REFERRED TO AS THE "YOUNG STREET CONNECTION"). THE YOUNG STREET CONNECTION SHALL BE DESIGNED AND CONSTRUCTED TO TOWN OF ROLESVILLE AND NCDOT STANDARDS AND ACCESS D SHALL BE LOCATED IN SUBSTANTIAL CONFORMANCE WITH THE CORRIDOR SHOWN IN THE ATTACHED EXHIBIT E. THE STREET SECTION FOR ACCESS D SHALL BE CONSTRUCTED AS SHOWN IN THE ATTACHED EXHIBIT F. DEVELOPER SHALL BE RESPONSIBLE FOR ALL COSTS TO DESIGN AND CONSTRUCT THE YOUNG STREET CONNECTION (THE "COSTS") AND DEVELOPER SHALL BE ENTITLED TO A CREDIT AGAINST THE PROJECT'S TRANSPORTATION IMPACT FEES FOR THE COSTS. CONSTRUCTION OF THE YOUNG STREET CONNECTION SHALL COMMENCE PRIOR TO APPROVAL OF THE 105TH DWELLING UNIT BUILDING PERMIT FOR THE PROJECT AND SHALL BE COMPLETE NOT LATER THAN APPROVAL OF THE 138TH DWELLING UNIT BUILDING PERMIT FOR THE PROJECT.

WHILE IT IS ANTICIPATED THAT THIS CONDITION WILL BE CLARIFIED BY A FORMAL DEVELOPMENT AGREEMENT, REIMBURSEMENT AGREEMENT, OR OTHER WRITTEN AGREEMENT BETWEEN THE DEVELOPER AND THE TOWN, THE ABSENCE OF SUCH A SUBSEQUENT WRITTEN AGREEMENT SHALL NOT BE DEEMED TO INVALIDATE THIS CONDITION. THIS CONDITION IS SUBJECT TO THE FOLLOWING CAVEATS:

- IN THE EVENT THE CAMPUS SITE, AN APPROVED ALIGNMENT WITHIN THE EXHIBIT E CORRIDOR, OR NECESSARY RIGHTS-OF-WAY, EASEMENTS, OR OTHER PROPERTY RIGHTS ARE MADE UNAVAILABLE TO THE PROJECT, THIS CONDITION SHALL BE DEEMED EXTINGUISHED.
- IN THE EVENT THE TOWN COMMENCES DESIGN AND/OR DEVELOPMENT OF ANY PART OF THE YOUNG STREET CONNECTION, THE DEVELOPER'S OBLIGATIONS FOR DESIGN AND/OR DEVELOPMENT, AS APPROPRIATE, FOR THOSE PORTIONS OF THE YOUNG STREET CONNECTION SHALL BE DEEMED EXTINGUISHED. FOR PURPOSES OF CLARITY, DEVELOPER SHALL REMAIN ENTITLED TO A CREDIT AGAINST THE PROJECT'S TRANSPORTATION IMPACT FEES FOR REMAINING COSTS.

"PROJECT" SHALL MEAN "PARKER RIDGE" AS DESCRIBED BY MA 22-03 AND ANX 22-06.
"DEVELOPER" SHALL MEAN LENNAR CAROLINAS LLC, AND ITS SUCCESSORS AND ASSIGNS.

### CITY OF RALEIGH - PLANS AUTHORIZED FOR CONSTRUCTION

Plans for the proposed use have been reviewed for general compliance with applicable codes. This limited review, and authorization for construction is not to be considered to represent total compliance with all legal requirements for development and construction. The property owner, design consultants, and contractors are each responsible for compliance with all applicable City, State and Federal laws. This specific authorization below is not a permit, nor shall it be construed to permit any violation of City, State or Federal Law. All Construction must be in accordance with all Local, State, and Federal Rules and Regulations.

Electronic Approval: This approval is being issued electronically. This approval is valid only upon the signature of a City of Raleigh Review Officer below. The City will retain a copy of the approved plans. Any work authorized by this approval must proceed in accordance with the plans kept on file with the City. This electronic approval may not be edited once issued. Any modification to this approval once issued will invalidate this approval.

City of Raleigh Development Approval _____

City of Raleigh Review Officer _____

**Water and Sewer Permits (If applicable)**

The City of Raleigh consents to the connection and extension of the City's **Public Sewer System** as shown on this plan. The material and Construction methods used for this project shall conform to the standards and specifications of the City's Public Utilities Handbook.
**City of Raleigh Public Utilities Department Permit #** S-5439

The City of Raleigh consents to the connection and extension of the City's **Public Water System** as shown on this plan. The material and Construction methods used for this project shall conform to the standards and specifications of the City's Public Utilities Handbook.
**City of Raleigh Public Utilities Department Permit #** W-4107

**EROSION CONTROL, STORMWATER AND FLOODPLAIN MANAGEMENT**
**APPROVED**
EROSION CONTROL ☐ S-_____
STORMWATER MGMT. ☐ S-_____
FLOOD STUDY ☐ S-_____
DATE_____
WAKE COUNTY NORTH CAROLINA
ENVIRONMENTAL CONSULTANT SIGNATURE

811
Know what's below.
Call before you dig.

### PROJECT OWNER AND CONSULTANT INFORMATION

| DEVELOPER: | ENGINEER: | BOUNDARY SURVEYOR: | TOPOGRAPHIC SURVEYOR: |
|---|---|---|---|
| LENNAR CORPORATION<br>1100 PERIMETER PARK DRIVE, SUITE 112<br>MORRISVILLE, NC 27560<br>(919) 863-6461<br><br>CONTACT: MICHAEL TAYLOR, PE LEED AP | BGE, INC<br>5400 WADE PARK BOULEVARD<br>RALEIGH, NORTH CAROLINA 27607<br>(919) 276-0111<br><br>CONTACT: DEBRA FERM, P.E. | JOHNSON, MIRMIRAN & THOMPSON, INC.<br>9201 ARBORETUM PARKWAY SUITE 310<br>RICHMOND, VA 23236<br>(804) 267-1258<br><br>CONTACT MICHAEL ZMUDA, L.S., P.S. | ADVANCED CIVIL DESIGN, INC.<br>51 KILMAYNE DRIVE SUITE 102<br>CARY, NC 27511<br>(919) 460-2024<br><br>CONTACT: JAMES WHITACRE, P.E., L.S. |

| SHEET LIST TABLE | |
|---|---|
| SHEET NUMBER | SHEET TITLE |
| C0-0 | COVER SHEET |
| C0-1 | GENERAL NOTES |
| C0-2 | NCG01 STABILIZATION NOTES |
| C1-0 | EXISTING CONDITIONS (1 OF 4) |
| C1-1 | EXISTING CONDITIONS (2 OF 4) |
| C1-2 | EXISTING CONDITIONS (3 OF 4) |
| C1-3 | EXISTING CONDITIONS (4 OF 4) |
| C1-4 | OVERALL DEMOLITION PLAN |
| C1-5 | ENLARGED DEMOLITION PLAN (1 OF 6) |
| C1-6 | ENLARGED DEMOLITION PLAN (2 OF 6) |
| C1-7 | ENLARGED DEMOLITION PLAN (3 OF 6) |
| C1-8 | ENLARGED DEMOLITION PLAN (4 OF 6) |
| C1-9 | ENLARGED DEMOLITION PLAN (5 OF 6) |
| C1-10 | ENLARGED DEMOLITION PLAN (6 OF 6) |
| C2-0 | OVERALL SITE PLAN |
| C2-1 | ENLARGED SITE PLAN (1 OF 6) |
| C2-2 | ENLARGED SITE PLAN (2 OF 6) |
| C2-3 | ENLARGED SITE PLAN (3 OF 6) |
| C2-4 | ENLARGED SITE PLAN (4 OF 6) |
| C2-5 | ENLARGED SITE PLAN (5 OF 6) |
| C2-6 | ENLARGED SITE PLAN (6 OF 6) |
| C2-7 | PHASING PLAN |
| C2-8 | SIGNAGE AND STRIPING PLAN |
| C3-0 | OVERALL UTILITY PLAN |
| C3-1 | ENLARGED UTILITY PLAN (1 OF 6) |
| C3-2 | ENLARGED UTILITY PLAN (2 OF 6) |
| C3-3 | ENLARGED UTILITY PLAN (3 OF 6) |
| C3-4 | ENLARGED UTILITY PLAN (4 OF 6) |
| C3-5 | ENLARGED UTILITY PLAN (5 OF 6) |
| C3-6 | ENLARGED UTILITY PLAN (6 OF 6) |
| C4-0 | OVERALL GRADING PLAN |
| C4-1 | ENLARGED GRADING PLAN (1 OF 6) |
| C4-2 | ENLARGED GRADING PLAN (2 OF 6) |
| C4-3 | ENLARGED GRADING PLAN (3 OF 6) |
| C4-4 | ENLARGED GRADING PLAN (4 OF 6) |
| C4-5 | ENLARGED GRADING PLAN (5 OF 6) |
| C4-6 | ENLARGED GRADING PLAN (6 OF 6) |
| C4-7 | STORM SEWER TABLE (1 OF 2) |
| C4-8 | STORM SEWER TABLE (2 OF 2) |
| C5-0 | OVERALL PHASE 1 EROSION CONTROL |
| C5-1 | ENLARGED PHASE 1 EROSION CONTROL PLAN (1 OF 6) |
| C5-2 | ENLARGED PHASE 1 EROSION CONTROL PLAN (2 OF 6) |
| C5-3 | ENLARGED PHASE 1 EROSION CONTROL PLAN (3 OF 6) |
| C5-4 | ENLARGED PHASE 1 EROSION CONTROL PLAN (4 OF 6) |
| C5-5 | ENLARGED PHASE 1 EROSION CONTROL PLAN (5 OF 6) |
| C5-6 | ENLARGED PHASE 1 EROSION CONTROL PLAN (6 OF 6) |
| C5-7 | OVERALL PHASE 2 EROSION CONTROL PLAN |
| C5-8 | ENLARGED PHASE 2 EROSION CONTROL PLAN (1 OF 6) |
| C5-9 | ENLARGED PHASE 2 EROSION CONTROL PLAN (2 OF 6) |
| C5-10 | ENLARGED PHASE 2 EROSION CONTROL PLAN (3 OF 6) |
| C5-11 | ENLARGED PHASE 2 EROSION CONTROL PLAN (4 OF 6) |
| C5-12 | ENLARGED PHASE 2 EROSION CONTROL PLAN (5 OF 6) |
| C5-13 | ENLARGED PHASE 2 EROSION CONTROL PLAN (6 OF 6) |
| C5-14 | OVERALL PHASE 3 EROSION CONTROL PLAN |
| C5-15 | ENLARGED PHASE 3 EROSION CONTROL PLAN (1 OF 6) |
| C5-16 | ENLARGED PHASE 3 EROSION CONTROL PLAN (2 OF 6) |
| C5-17 | ENLARGED PHASE 3 EROSION CONTROL PLAN (3 OF 6) |
| C5-18 | ENLARGED PHASE 3 EROSION CONTROL PLAN (4 OF 6) |
| C5-19 | ENLARGED PHASE 3 EROSION CONTROL PLAN (5 OF 6) |
| C5-20 | ENLARGED PHASE 3 EROSION CONTROL PLAN (6 OF 6) |
| C6-0 | CARVED STONE CT PLAN AND PROFILE |
| C6-1 | CAVALERA WAY PLAN AND PROFILE |
| C6-2 | GRANITE KNOLL CT PLAN AND PROFILE (1 OF 2) |
| C6-3 | GRANITE KNOLL CT PLAN AND PROFILE (2 OF 2) |
| C6-4 | STONE OVERLOOK CT PLAN AND PROFILE |
| C6-5 | WATER NEST DR PLAN AND PROFILE |
| C6-6 | TREE MOSS CT PLAN AND PROFILE |
| C6-7 | QUARRY POND CT PLAN AND PROFILE |
| C6-8 | ZANNING DR PLAN AND PROFILE |
| C6-9 | LONG MELFORD DRIVE PLAN AND PROFILE (1 OF 5) |
| C6-10 | LONG MELFORD DRIVE PLAN AND PROFILE (2 OF 5) |
| C6-11 | LONG MELFORD DRIVE PLAN AND PROFILE (3 OF 5) |
| C6-12 | LONG MELFORD DRIVE PLAN AND PROFILE (4 OF 5) |
| C6-13 | LONG MELFORD DRIVE PLAN AND PROFILE (5 OF 5) |
| C6-14 | ALLEY 1 PLAN AND PROFILE |
| C6-15 | ALLEY 2 PLAN AND PROFILE |
| C6-16 | ALLEY 3 PLAN AND PROFILE |
| C6-17 | ALLEY 4 PLAN AND PROFILE |
| C6-18 | GW1A GREENWAY PLAN AND PROFILE (1 OF 2) |
| C6-19 | GW1A GREENWAY PLAN AND PROFILE (2 OF 2) |
| C6-20 | GW2 GREENWAY PLAN AND PROFILE (1 OF 2) |
| C6-21 | GW2 GREENWAY PLAN AND PROFILE (2 OF 2) |
| C6-22 | GW3 GREENWAY PLAN AND PROFILE (1 OF 1) |
| C6-23 | GW4 GREENWAY PLAN AND PROFILE (1 OF 2) |
| C6-24 | GW4 GREENWAY PLAN AND PROFILE (2 OF 2) |
| C6-25 | SEWER OUTFALL 1 AND 2 PLAN AND PROFILE |
| C6-26 | SEWER OUTFALL 3 AND 4 PLAN AND PROFILE |
| C6-27 | SEWER OUTFALL 6 PLAN AND PROFILE |
| C7-0 | SCM 1 PLAN AND PROFILE |
| C7-1 | SCM 2 PLAN AND PROFILE |
| C7-2 | SCM 3 PLAN AND PROFILE |
| C7-3 | SCM 4 PLAN AND PROFILE |
| C7-4 | CULVERT 1 PLAN |
| C7-5 | CULVERT 2 PLAN |
| C7-6 | CULVERT 3 PLAN |
| C7-7 | CULVERT 4 PLAN |
| C7-8 | SCM DETAILS |
| C8-0 | SITE DETAILS (1 OF 3) |
| C8-1 | SITE DETAILS (2 OF 3) |
| C8-2 | SITE DETAILS (3 OF 3) |
| C8-3 | EROSION CONTROL DETAILS (1 OF 2) |
| C8-4 | EROSION CONTROL DETAILS (2 OF 2) |
| C8-5 | SEWER DETAIL |
| C8-6 | STORM DETAILS (1 OF 2) |
| C8-7 | STORM DETAILS (2 OF 2) |
| C8-8 | WATER DETAIL (1 OF 2) |
| C8-9 | WATER DETAIL (2 OF 2) |
| C9-0 | OPEN SPACE PLAN |
| C9-1 | OPEN SPACE DETAILS (1 OF 2) |
| C9-2 | OPEN SPACE DETAILS (2 OF 2) |
| L1-0 | OVERALL LANDSCAPE PLAN |
| L1-1 | ENLARGED LANDSCAPE PLAN (1 OF 6) |
| L1-2 | ENLARGED LANDSCAPE PLAN (2 OF 6) |
| L1-3 | ENLARGED LANDSCAPE PLAN (3 OF 6) |
| L1-4 | ENLARGED LANDSCAPE PLAN (4 OF 6) |
| L1-5 | ENLARGED LANDSCAPE PLAN (5 OF 6) |
| L1-6 | ENLARGED LANDSCAPE PLAN (6 OF 6) |
| L1-7 | SCM PLANTINGS |
| L2-0 | LANDSCAPE DETAILS |
| L3-0 | OVERALL TREE CONSERVATION PLAN |
| L3-1 | ENLARGED TCA PLAN (1 OF 6) |
| L3-2 | ENLARGED TCA PLAN (2 OF 6) |
| L3-3 | ENLARGED TCA PLAN (3 OF 6) |
| L3-4 | ENLARGED TCA PLAN (4 OF 6) |
| L3-5 | ENLARGED TCA PLAN (5 OF 6) |
| L3-6 | ENLARGED TCA PLAN (6 OF 6) |
| L4-0 | SITE LIGHTING PLAN (GRID) |
| L4-1 | SITE LIGHTING PLAN (NO GRID) |

| REV | DATE | DESCRIPTION |
|---|---|---|
| 4 | 03/24/2025 | SUBPHASING, SEWER, & CURB TYPES |
| 3 | 11/04/2024 | AMENITY CENTER REVISIONS |
| 2 | 06/06/2024 | RETAINING WALL LOCATION REVISION |
| 1 | 06/04/2024 | STORM STRUCTURE REVISIONS |
| 0 | 04/08/2024 | EROSION CONTROL REVISION |

DESIGNED BY: DF/CD
DRAWN BY: DF/JWM
REVIEWED BY: DF

BGE
5438 WADE PARK BLVD, SUITE 420
RALEIGH NC 27607
WWW.BGEINC.COM
NC LICENSE #C-4397


LENNAR CORPORATION
1100 PERIMETER PARK DRIVE, SUITE 112
MORRISVILLE / NORTH CAROLINA / 27560

PARKER RIDGE
82 SCHOOL STREET
ROLESVILLE / NORTH CAROLINA / 27571

COVER SHEET

NORTH CAROLINA PROFESSIONAL SEAL 042892 ENGINEER DEBRA M. FERM
DocuSigned by: FDC3607483B9C4...
3/25/2025

FILE NUMBER: 8430-03
DATE: 3/24/2025
C0-0

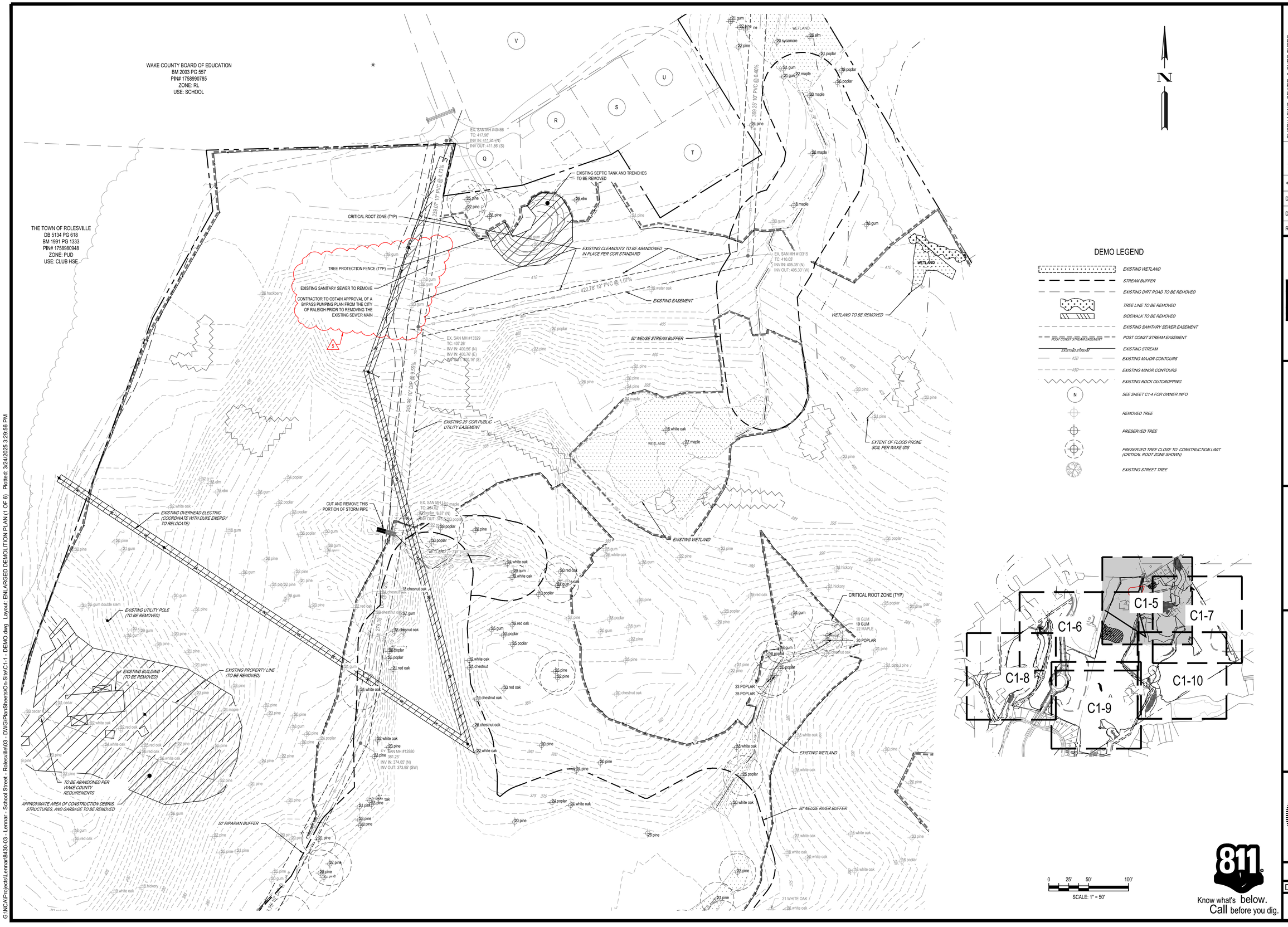


| REV | DATE | DESCRIPTION |
|---|---|---|
| 5 | 03/24/2025 | SUBPHASING, SEWER, & CURB TYPES |
| 4 | 11/04/2024 | AMENITY CENTER REVISIONS |
| 3 | 06/05/2024 | RETAINING WALL LOCATION REVISION |
| 2 | 06/04/2024 | STORM STRUCTURE REVISIONS |
| 1 | 04/08/2024 | EROSION CONTROL REVISION |

DESIGNED BY: DF/CD

DRAWN BY: DF/JWM

REVIEWED BY: DF

BGE
5438 WADE PARK BLVD, SUITE 420
RALEIGH NC 27607
WWW.BGEINC.COM
NC LICENSE #C-4397



LENNAR CORPORATAION
1100 PERIMETER PARK DRIVE, SUITE 112
MORRISVILLE / NORTH CAROLINA / 27560

PARKER RIDGE
82 SCHOOL STREET
ROLESVILLE / NORTH CAROLINA / 27571

# ENLARGED DEMOLITION PLAN (1 OF 6)

NORTH CAROLINA PROFESSIONAL ENGINEER SEAL 022892 DEBRA M. TERRY
Signed by:
Debra Terry
F2C3B9B9B9B9B4B...
3/25/2025

FILE NUMBER: 8430-03

DATE: 3/24/2025

C1-5


## LEGEND

- PROPOSED CURB AND GUTTER
- PROPOSED RETAINING WALL
- PROPOSED HANDICAP PAVEMENT MARKING
- PROPOSED SIGN
- PROPOSED ACCESSIBLE RAMP
- PROPOSED STANDARD DUTY CONCRETE SIDEWALK
- PROPOSED ASPHALT MULTI-USE PATH
- PROPOSED EASEMENT
- SDE — PROPOSED STORM EASEMENT
- PROPOSED ROW
- PROPOSED SETBACK
- PROPOSED PHASELINE
- PROPOSED BUFFER
- EXTENT OF FLOOD PRONE SOIL PER WAKE GIS
- TREE TO PRESERVE
- SIGHT DISTANCE TRIANGLE
- SINGLE FAMILY LOT
- OPEN SPACE
- PERIMETER BUFFER
- NEUSE RIVER BUFFER

## SHEET KEY

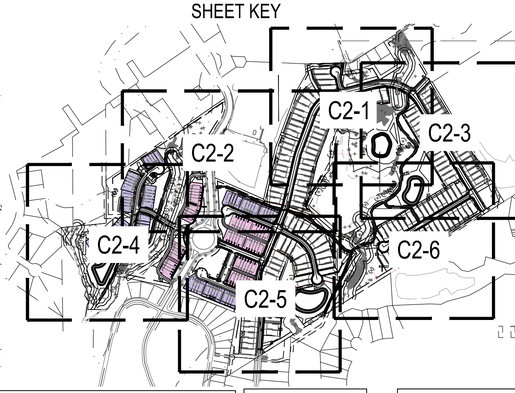


| CURVE TABLE | | | | | |
|---|---|---|---|---|---|
| NUMBER | DELTA ANGLE | RADIUS | ARC LENGTH | CHORD DIRECTION | CHORD DISTANCE |
| C1 | 72°50'50" | 300.00' | 381.42' | S67°20'50"E | 356.25' |
| C2 | 56°09'00" | 230.00' | 225.40' | N48°09'20"E | 216.49' |
| C3 | 7°01'20" | 230.00' | 28.19' | N16°34'10"E | 28.17' |
| C4 | 8°48'40" | 230.00' | 35.37' | N17°27'50"E | 35.33' |
| C5 | 31°30'10" | 230.00' | 126.46' | N6°07'00"E | 124.87' |
| C6 | 14°12'10" | 230.00' | 57.02' | N2°32'00"W | 56.87' |
| C7 | 31°38'20" | 230.00' | 127.00' | N83°57'00"W | 125.40' |
| C8 | 50°27'50" | 230.00' | 202.57' | N36°55'00"W | 196.09' |
| C9 | 21°06'20" | 150.00' | 55.25' | N3°13'00"W | 54.94' |
| C10 | 24°05'30" | 230.00' | 96.71' | N69°26'20"W | 96.00' |
| C11 | 10°41'20" | 230.00' | 42.91' | N82°44'10"W | 42.84' |
| C12 | 51°53'10" | 230.00' | 208.28' | N34°27'30"E | 201.24' |
| C13 | 47°15'10" | 230.00' | 189.68' | N32°08'30"E | 184.35' |
| C14 | 90°00'00" | 50.00' | 78.54' | N23°07'50"W | 70.71' |
| C15 | 12°15'00" | 100.00' | 21.38' | S15°47'40"W | 21.34' |
| C16 | 20°26'50" | 100.00' | 35.69' | S19°53'30"W | 35.50' |
| C17 | 86°45'50" | 50.00' | 75.72' | S13°15'50"E | 68.69' |
| C18 | 81°30'30" | 50.00' | 71.13' | N48°38'20"E | 65.28' |
| C19 | 18°57'20" | 100.00' | 33.08' | N17°21'40"E | 32.93' |
| C20 | 4°55'20" | 100.00' | 8.59' | N24°22'40"E | 8.59' |
| C21 | 15°42'20" | 50.00' | 13.70' | N75°59'00"W | 13.66' |

| LINE TABLE | | |
|---|---|---|
| LINE | LENGTH | DIRECTION |
| L1 | 342.55 | N4° 34' 11.00"E |
| L2 | 133.83 | N9° 38' 02.77"W |
| L3 | 337.55 | N21° 52' 07.57"E |
| L4 | 142.62 | N21° 52' 07.57"E |
| L5 | 375.19 | N13° 03' 30.96"E |
| L6 | 310.99 | N20° 04' 51.30"E |
| L7 | 322.73 | N76° 13' 49.66"E |
| L8 | 963.87 | S30° 55' 22.00"E |
| L9 | 34.09 | S80° 13' 50.62"W |
| L10 | 433.61 | N68° 07' 52.39"W |
| L11 | 390.26 | S68° 06' 51.46"E |
| L12 | 45.00 | N11° 59' 04.67"W |
| L13 | 40.14 | N12° 03' 01.98"W |
| L14 | 111.22 | N11° 41' 07.91"W |
| L15 | 170.59 | N82° 08' 53.42"W |
| L16 | 399.13 | N68° 07' 52.43"W |
| L17 | 69.76 | S22° 56' 22.78"W |
| L18 | 91.10 | N13° 46' 10.34"W |
| L19 | 14.90 | N7° 20' 09.54"E |
| L20 | 143.78 | N68° 04' 53.33"W |

| LINE TABLE | | |
|---|---|---|
| LINE | LENGTH | DIRECTION |
| L21 | 119.89 | N57° 23' 34.67"W |
| L22 | 49.98 | N81° 29' 03.27"W |
| L23 | 231.99 | N60° 24' 04.81"E |
| L24 | 98.14 | N8° 30' 56.73"E |
| L25 | 128.99 | N8° 30' 56.73"E |
| L26 | 98.04 | N55° 46' 03.97"E |
| L27 | 826.29 | S59° 04' 38.00"W |
| L28 | 165.31 | N44° 21' 49.14"E |
| L29 | 350.44 | N68° 07' 52.43"W |
| L30 | 16.23 | N21° 52' 07.57"E |
| L31 | 41.74 | S21° 55' 06.67"W |
| L32 | 85.49 | S9° 40' 05.66"W |
| L33 | 142.88 | S30° 07' 00.00"W |
| L34 | 135.73 | S56° 38' 47.00"E |
| L35 | 106.06 | N89° 23' 34.38"E |
| L36 | 157.53 | N7° 53' 02.26"E |
| L37 | 71.28 | N21° 55' 06.67"E |
| L38 | 91.93 | N26° 50' 23.21"E |
| L39 | 40.40 | N83° 50' 08.38"W |
| L40 | 171.05 | N68° 07' 52.43"W |

### ABBREVIATION LEGEND

| | |
|---|---|
| PB | PERIMETER BUFFER |
| NRB | NEUSE RIVER BUFFER |
| OS | OPEN SPACE |
| SDE | STORM DRAINAGE EASEMENT |

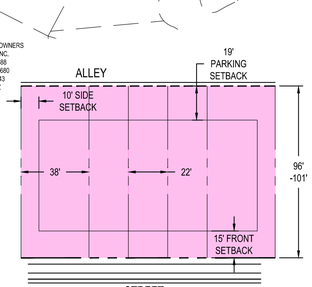


REAR LOAD TOWNHOME LOT DIMENSIONS (TYPICAL) NOT TO SCALE

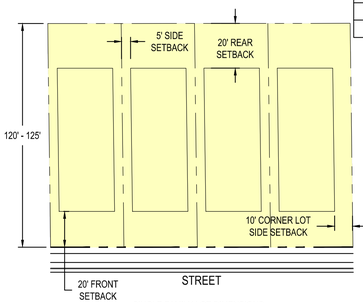


SINGLE FAMILY LOT DIMENSIONS (TYPICAL) NOT TO SCALE

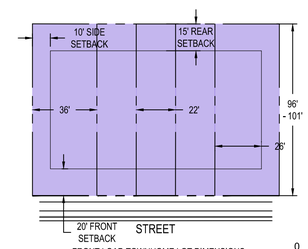


FRONT LOAD TOWNHOME LOT DIMENSIONS (TYPICAL) NOT TO SCALE

0 75 150 300
SCALE: 1" = 150

811 Know what's below. Call before you dig.

| REV | DATE | DESCRIPTION |
|---|---|---|
| 1 | 03/24/2025 | SUBPHASING, SEWER, & CURB TYPES |
| 2 | 11/04/2024 | AMENITY CENTER REVISIONS |
| 3 | 06/05/2024 | RETAINING WALL LOCATION REVISION |
| 4 | 06/04/2024 | STORM STRUCTURE REVISIONS |
| 5 | 04/08/2024 | EROSION CONTROL REVISION |

DESIGNED BY: DF/CD
DRAWN BY: DF/JWM
REVIEWED BY: DF

BGE
5438 WADE PARK BLVD, SUITE 420
RALEIGH NC 27607
WWW.BGEINC.COM
NC LICENSE #C-4397


LENNAR CORPORATION
1100 PERIMETER PARK DRIVE, SUITE 112
MORRISVILLE / NORTH CAROLINA / 27560

PARKER RIDGE
82 SCHOOL STREET
ROLESVILLE / NORTH CAROLINA / 27571

# OVERALL SITE PLAN

NORTH CAROLINA PROFESSIONAL SEAL 028892 ENGINEER DEBRA M. FERR
3/25/25

FILE NUMBER: 8430-03
DATE: 3/24/2025
C2-0

G:\NCA\Projects\Lennar\8430-03 - Lennar - School Street - Rolesville\03 - DWG\PlanSheets\On-Site\C3-0 - SITE-PLAN.dwg Layout: C2-0 OVERALL SITE PLAN Plotted: 3/25/2025 4:19:30 PM

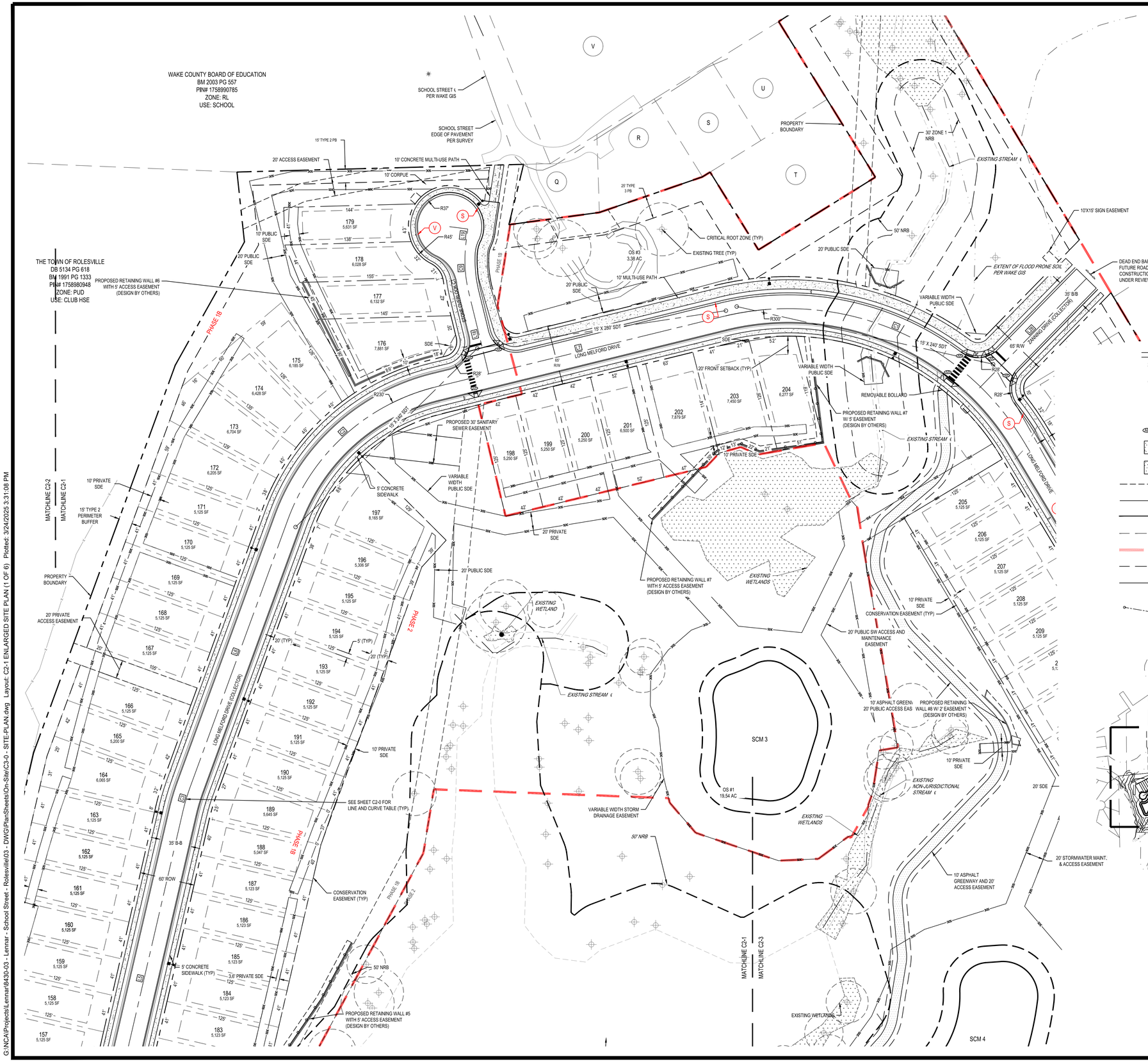


| CURB LEGEND | |
|---|---|
| S | 30" STANDARD CURB & GUTTER |
| V | 30" VALLEY CURB & GUTTER |

SITE PLAN LEGEND

- PROPOSED CURB AND GUTTER
- PROPOSED RETAINING WALL
- PROPOSED HANDICAP PAVEMENT MARKING
- PROPOSED SIGN
- PROPOSED ACCESSIBLE RAMP
- PROPOSED STANDARD DUTY CONCRETE SIDEWALK
- PROPOSED ASPHALT MULTI-USE PATH
- PROPOSED EASEMENT
- PROPOSED STORM EASEMENT
- PROPOSED ROW
- PROPOSED SETBACK
- PROPOSED PHASELINE
- PROPOSED BUFFER
- EXTENT OF FLOOD PRONE SOIL PER WAKE GIS
- TREE TO PRESERVE
- SIGHT DISTANCE TRIANGLE

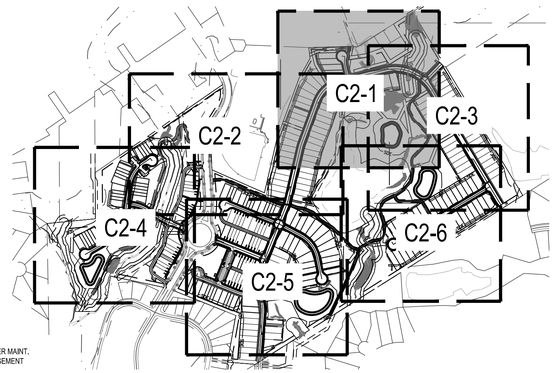


SHEET KEY

ABBREVIATION LEGEND

| | |
|---|---|
| PB | PERIMETER BUFFER |
| NRB | NEUSE RIVER BUFFER |
| OS | OPEN SPACE |
| SDE | STORM DRAINAGE EASEMENT |

0 25' 50' 100'
SCALE: 1" = 50'

811 Know what's below. Call before you dig.

| REV | DATE | DESCRIPTION |
|---|---|---|
| 1 | 03/24/2025 | SUBPHASING, SEWER, & CURB TYPES |
| 2 | 11/04/2024 | AMENITY CENTER REVISIONS |
| 3 | 06/06/2024 | RETAINING WALL LOCATION REVISION |
| 4 | 06/04/2024 | STORM STRUCTURE REVISIONS |
| 5 | 04/08/2024 | EROSION CONTROL REVISION |

DESIGNED BY: DF/CD
DRAWN BY: DF/JWM
REVIEWED BY: DF

BGE
5438 WADE PARK BLVD, SUITE 420
RALEIGH NC 27607
WWW.BGEINC.COM
NC LICENSE #C-4397


LENNAR CORPORTAION
1100 PERIMETER PARK DRIVE, SUITE 112
MORRISVILLE / NORTH CAROLINA / 27560

PARKER RIDGE
82 SCHOOL STREET
ROLESVILLE / NORTH CAROLINA / 27571

ENLARGED SITE PLAN (1 OF 6)

NORTH CAROLINA PROFESSIONAL SEAL 045890 ENGINEER DEBRA M. FERR
Signed by: DocuSign Envelope ID: FDC3597AB30F4A...
3/25/2025

FILE NUMBER: 8430-03
DATE: 3/24/2025
C2-1

SITE PLAN LEGEND

- PROPOSED CURB AND GUTTER
- PROPOSED RETAINING WALL
- PROPOSED HANDICAP PAVEMENT MARKING
- PROPOSED SIGN
- PROPOSED ACCESSIBLE RAMP
- PROPOSED STANDARD DUTY CONCRETE SIDEWALK
- PROPOSED ASPHALT MULTI-USE PATH
- PROPOSED EASEMENT
- SDE — PROPOSED STORM EASEMENT
- PROPOSED ROW
- PROPOSED SETBACK
- PROPOSED PHASELINE
- PROPOSED BUFFER
- EXTENT OF FLOOD PRONE SOIL PER WAKE GIS
- TREE TO PRESERVE
- SIGHT DISTANCE TRIANGLE

| CURB LEGEND | |
|---|---|
| S | 30" STANDARD CURB & GUTTER |
| V | 30" VALLEY CURB & GUTTER |

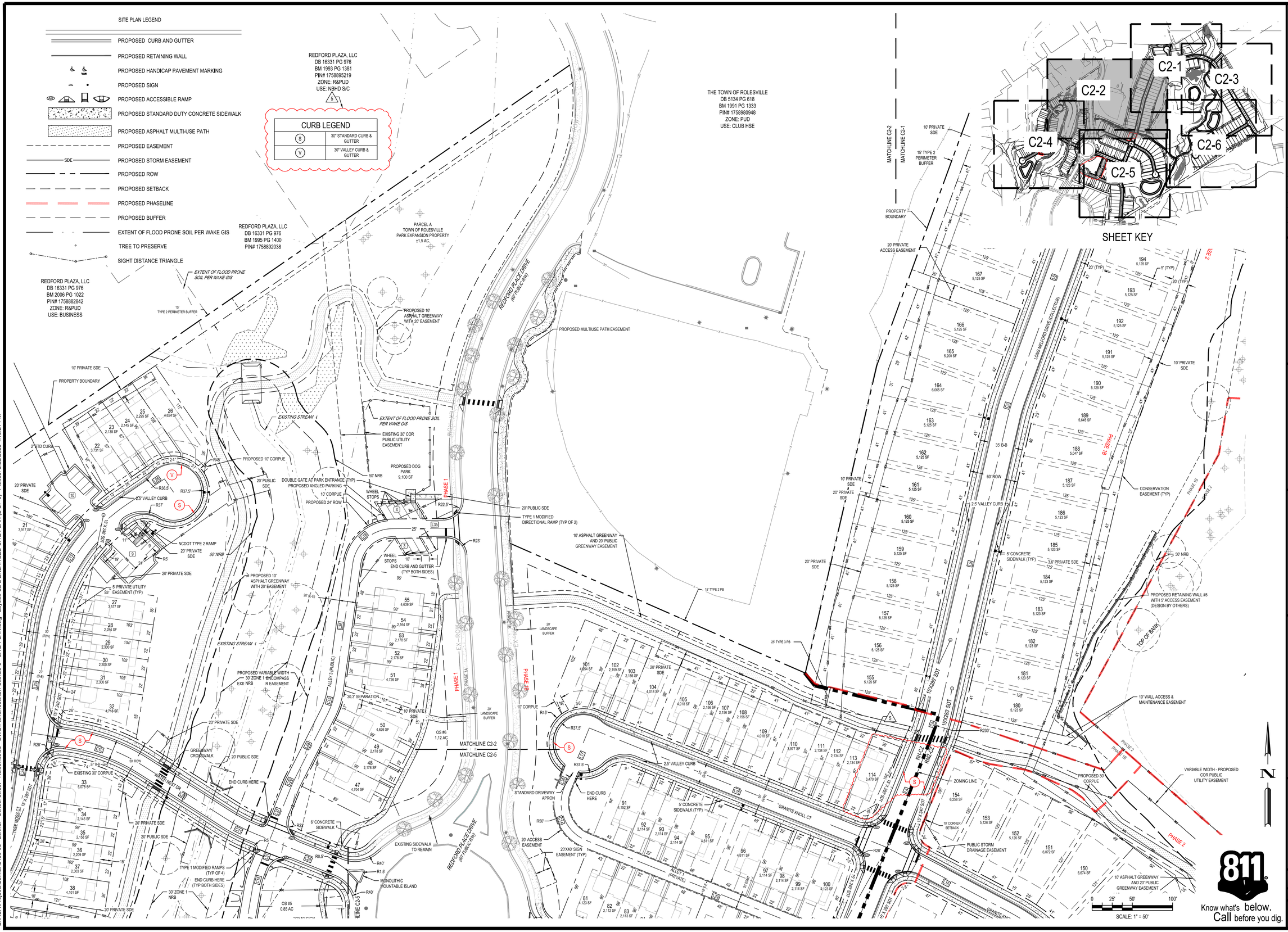


| REV | DATE | DESCRIPTION |
|---|---|---|
| 1 | 03/24/2025 | SUBPHASING, SEWER, & CURB TYPES |
| 2 | 11/04/2024 | AMENITY CENTER REVISIONS |
| 3 | 06/05/2024 | RETAINING WALL LOCATION REVISION |
| 4 | 06/04/2024 | STORM STRUCTURE REVISIONS |
| 5 | 04/08/2024 | EROSION CONTROL REVISION |

DESIGNED BY: DF/CD
DRAWN BY: DF/JWM
REVIEWED BY: DF


BGE
5438 WADE PARK BLVD, SUITE 420
RALEIGH NC 27607
WWW.BGEINC.COM
NC LICENSE #C-4397




LENNAR CORPORTAION
1100 PERIMETER PARK DRIVE, SUITE 112
MORRISVILLE / NORTH CAROLINA / 27560

PARKER RIDGE
82 SCHOOL STREET
ROLESVILLE / NORTH CAROLINA / 27571

# ENLARGED SITE PLAN (2 OF 6)

NORTH CAROLINA PROFESSIONAL SEAL 028892 ENGINEER DEBRA W. FERM 3/25/25

FILE NUMBER: 8430-03

DATE: 3/24/2025

C2-2

Know what's below. Call before you dig.

G:\NCA\Projects\Lennar\8430-03 - Lennar - School Street - Rolesville\03 - DWG\PlanSheets\On-Site\C2-0 - SITE-PLAN.dwg Layout: C2-2 ENLARGED SITE PLAN (2 OF 6) Plotted: 3/25/2025 4:13:21 PM

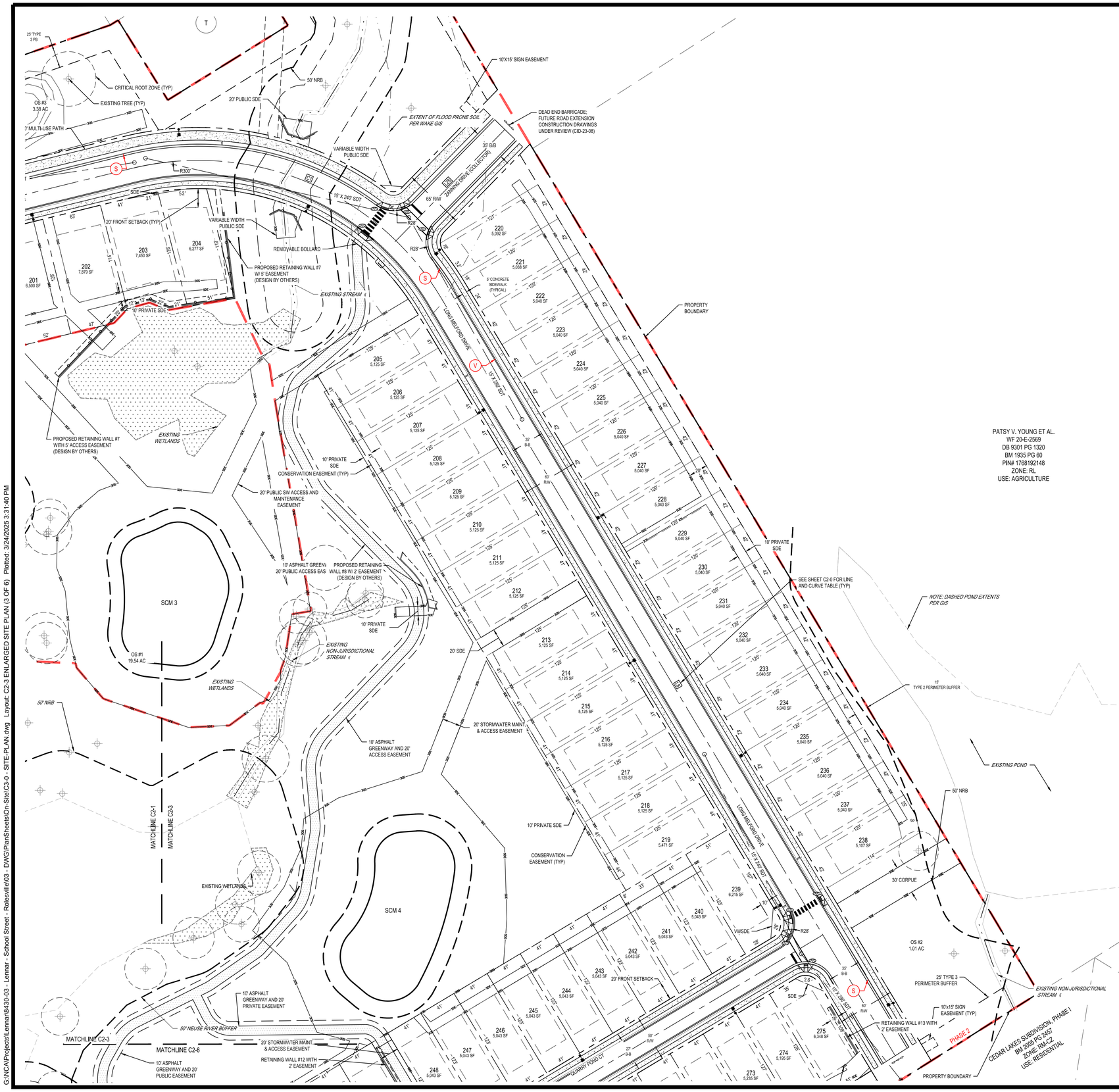


| CURB LEGEND | |
|---|---|
| S | 30" STANDARD CURB & GUTTER |
| V | 30" VALLEY CURB & GUTTER |

SITE PLAN LEGEND

- PROPOSED CURB AND GUTTER
- PROPOSED RETAINING WALL
- PROPOSED HANDICAP PAVEMENT MARKING
- PROPOSED SIGN
- PROPOSED ACCESSIBLE RAMP
- PROPOSED STANDARD DUTY CONCRETE SIDEWALK
- PROPOSED ASPHALT MULTI-USE PATH
- PROPOSED EASEMENT
- SDE — PROPOSED STORM EASEMENT
- PROPOSED ROW
- PROPOSED SETBACK
- PROPOSED PHASELINE
- PROPOSED BUFFER
- EXTENT OF FLOOD PRONE SOIL PER WAKE GIS
- TREE TO PRESERVE
- SIGHT DISTANCE TRIANGLE

ABBREVIATION LEGEND

| | |
|---|---|
| PB | PERIMETER BUFFER |
| NRB | NEUSE RIVER BUFFER |
| OS | OPEN SPACE |
| SDE | STORM DRAINAGE EASEMENT |

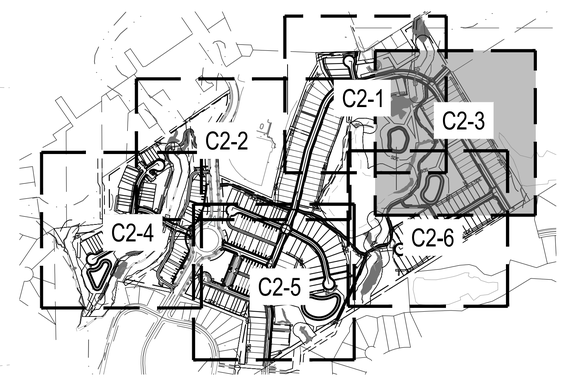


SHEET KEY

0 25' 50' 100'
SCALE: 1" = 50'

Know what's below. Call before you dig.

| REV | DATE | DESCRIPTION |
|---|---|---|
| 1 | 03/24/2025 | SUBPHASING, SEWER, & CURB TYPES |
| 4 | 11/04/2024 | AMENITY CENTER REVISIONS |
| 3 | 06/06/2024 | RETAINING WALL LOCATION REVISION |
| 2 | 06/04/2024 | STORM STRUCTURE REVISIONS |
| 1 | 04/08/2024 | EROSION CONTROL REVISION |

DESIGNED BY: DF/CD
DRAWN BY: DF/JWM
REVIEWED BY: DF

BGE
5438 WADE PARK BLVD, SUITE 420
RALEIGH NC 27607
WWW.BGEINC.COM
NC LICENSE #C-4397


LENNAR CORPORTAION
1100 PERIMETER PARK DRIVE, SUITE 112
MORRISVILLE / NORTH CAROLINA / 27560

PARKER RIDGE
82 SCHOOL STREET
ROLESVILLE / NORTH CAROLINA / 27571

ENLARGED SITE PLAN
(3 OF 7)

NORTH CAROLINA PROFESSIONAL ENGINEER SEAL
DEBRA M. FERRI
Signed by: DocuSign
FDC3597483B9C...
3/25/2025

FILE NUMBER: 8430-03
DATE: 3/24/2025
C2-3

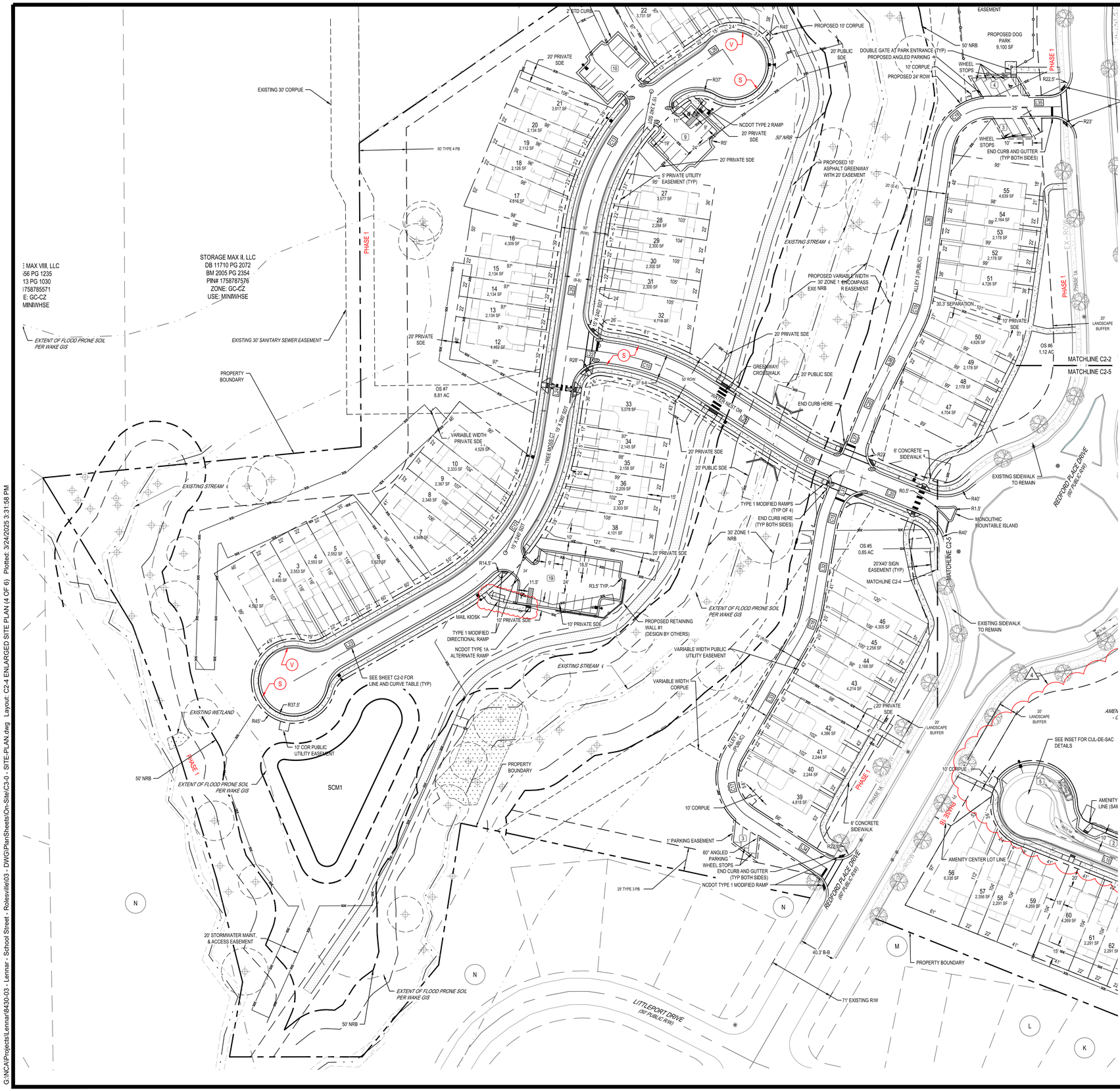





CURB LEGEND

| | |
|---|---|
| S | 30" STANDARD CURB & GUTTER |
| V | 30" VALLEY CURB & GUTTER |

SITE PLAN LEGEND

- PROPOSED CURB AND GUTTER
- PROPOSED RETAINING WALL
- PROPOSED HANDICAP PAVEMENT MARKING
- PROPOSED SIGN
- PROPOSED ACCESSIBLE RAMP
- PROPOSED STANDARD DUTY CONCRETE SIDEWALK
- PROPOSED ASPHALT MULTI-USE PATH
- PROPOSED EASEMENT
- SDE — PROPOSED STORM EASEMENT
- PROPOSED ROW
- PROPOSED SETBACK
- PROPOSED PHASELINE
- PROPOSED BUFFER
- EXTENT OF FLOOD PRONE SOIL PER WAKE GIS
- TREE TO PRESERVE
- SIGHT DISTANCE TRIANGLE

ABBREVIATION LEGEND

| | |
|---|---|
| PB | PERIMETER BUFFER |
| NRB | NEUSE RIVER BUFFER |
| OS | OPEN SPACE |
| SDE | STORM DRAINAGE EASEMENT |

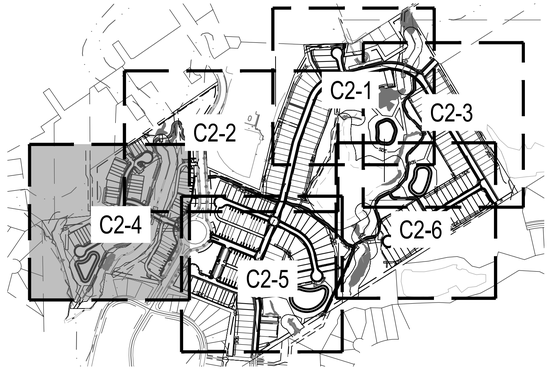


SHEET KEY

0 25' 50' 100'
SCALE: 1" = 50'

Know what's below. Call before you dig.

| REV | DATE | DESCRIPTION |
|---|---|---|
| 1 | 03/24/2025 | SUBPHASING, SEWER, & CURB TYPES |
| 3 | 11/04/2024 | AMENITY CENTER REVISIONS |
| 2 | 06/06/2024 | RETAINING WALL LOCATION REVISION |
| 1 | 06/04/2024 | STORM STRUCTURE REVISIONS |
| 1 | 04/08/2024 | EROSION CONTROL REVISION |

DESIGNED BY: DF/CD
DRAWN BY: DF/JWM
REVIEWED BY: DF

BGE
5438 WADE PARK BLVD, SUITE 420
RALEIGH NC 27607
WWW.BGEINC.COM
NC LICENSE #C-4397


LENNAR CORPORATAION
1100 PERIMETER PARK DRIVE, SUITE 112
MORRISVILLE / NORTH CAROLINA / 27560

PARKER RIDGE
82 SCHOOL STREET
ROLESVILLE / NORTH CAROLINA / 27571

# ENLARGED SITE PLAN (4 OF 6)

NORTH CAROLINA PROFESSIONAL ENGINEER SEAL 024892 DEBRA M. FERRY
Signed by: DocuSign Envelope ID: F7DC3597BE9B4BA...
3/25/2025

FILE NUMBER: 8430-03
DATE: 3/24/2025
C2-4

G:\NCA\Projects\Lennar\8430-03 - Lennar - School Street - Rolesville\03 - DWG\PlanSheets\On-Site\C3-0 - SITE-PLAN.dwg Layout: C2-4 ENLARGED SITE PLAN (4 OF 6) Plotted: 3/24/2025 3:31:58 PM

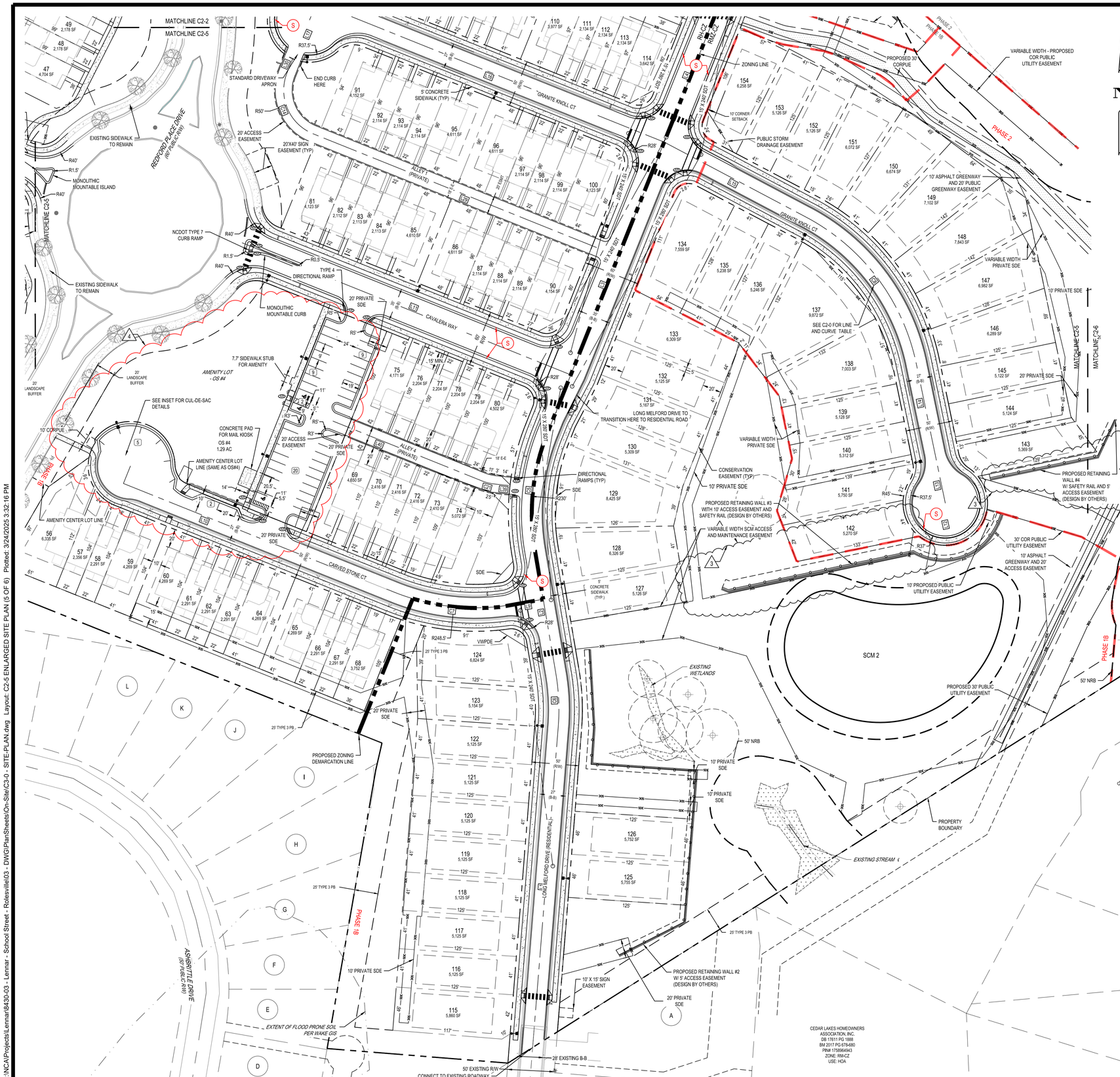


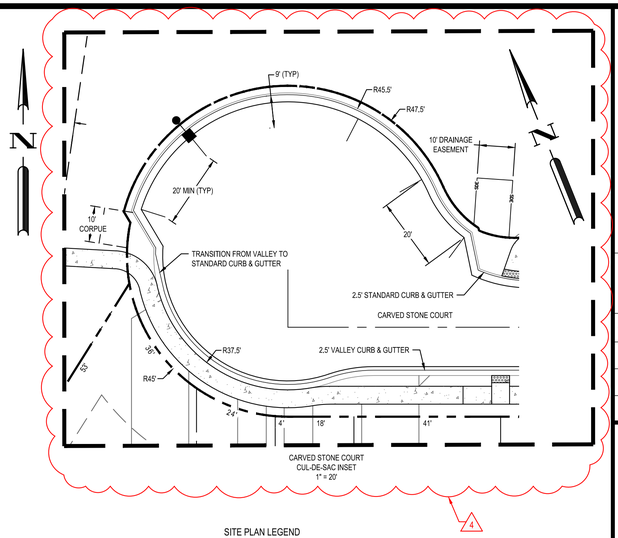


SITE PLAN LEGEND

- PROPOSED CURB AND GUTTER
- PROPOSED RETAINING WALL
- PROPOSED HANDICAP PAVEMENT MARKING
- PROPOSED SIGN
- PROPOSED ACCESSIBLE RAMP
- PROPOSED STANDARD DUTY CONCRETE SIDEWALK
- PROPOSED ASPHALT MULTI-USE PATH
- PROPOSED EASEMENT
- SDE — PROPOSED STORM EASEMENT
- PROPOSED ROW
- PROPOSED SETBACK
- PROPOSED PHASELINE
- PROPOSED BUFFER
- EXTENT OF FLOOD PRONE SOIL PER WAKE GIS
- TREE TO PRESERVE
- SIGHT DISTANCE TRIANGLE

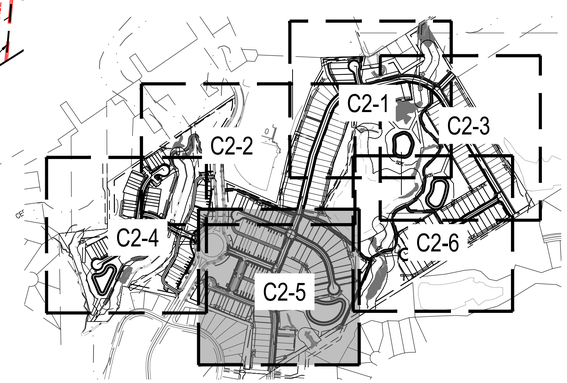


SHEET KEY

AMENITY CENTER LOT NOTES:
1. OPEN SPACE #4 WILL BE A SEPARATE PARCEL THAT CONTAINS THE FUTURE AMENITY CENTER
2. SIGNAGE TO BE PROVIDED FOR THE 6 SPACES THAT FRONT THE AMENITY CENTER SEE SHEET C2-8 FOR DETAILS REGARDING SIGNAGE.

| CURB LEGEND | |
|---|---|
| S | 30" STANDARD CURB & GUTTER |
| V | 30" VALLEY CURB & GUTTER |

0 25' 50' 100'
SCALE: 1" = 50'

Know what's below. Call before you dig.

| REV | DATE | DESCRIPTION |
|---|---|---|
| 1 | 03/24/2025 | SUBPHASING, SEWER, & CURB TYPES |
| 2 | 11/04/2024 | AMENITY CENTER REVISIONS |
| 3 | 06/06/2024 | RETAINING WALL LOCATION REVISION |
| 4 | 06/04/2024 | STORM STRUCTURE REVISIONS |
| 5 | 04/08/2024 | EROSION CONTROL REVISION |

DESIGNED BY: DF/CD
DRAWN BY: DF/JWM
REVIEWED BY: DF

BGE
5438 WADE PARK BLVD, SUITE 420
RALEIGH NC 27607
WWW.BGEINC.COM
NC LICENSE #C-4397


LENNAR CORPORATION
1100 PERIMETER PARK DRIVE, SUITE 112
MORRISVILLE / NORTH CAROLINA / 27560

PARKER RIDGE
82 SCHOOL STREET
ROLESVILLE / NORTH CAROLINA / 27571

ENLARGED SITE PLAN (5 OF 6)

SEAL by: DEBRA M. FERN
NORTH CAROLINA PROFESSIONAL ENGINEER SEAL 049396
3/25/2025

FILE NUMBER: 8430-03
DATE: 3/24/2025
C2-5

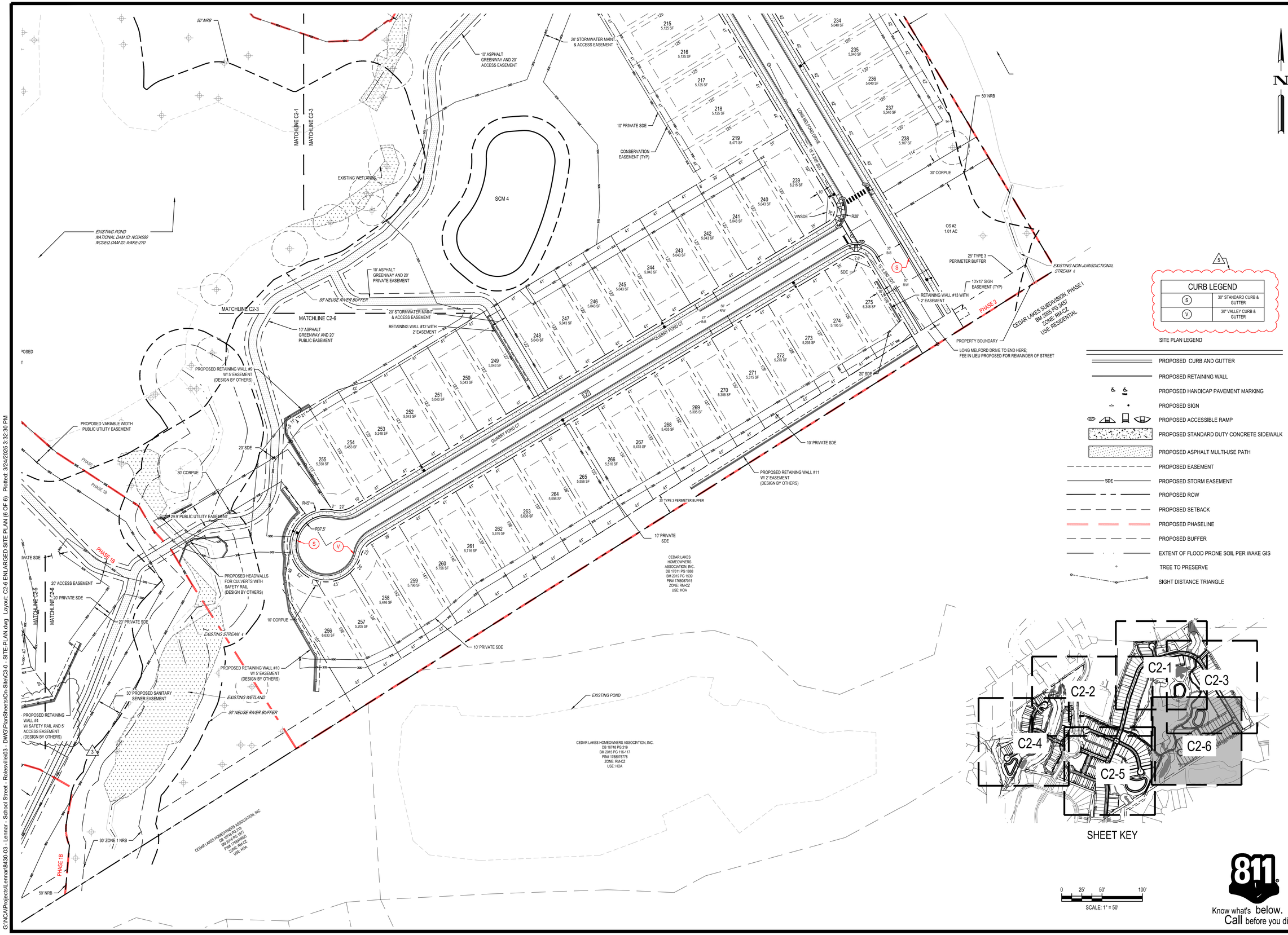


| REV | DATE | DESCRIPTION |
|---|---|---|
| 3 | 03/24/2025 | SUBPHASING, SEWER, & CURB TYPES |
| 2 | 11/04/2024 | AMENITY CENTER REVISIONS |
| 1 | 06/06/2024 | RETAINING WALL LOCATION REVISION |
| 1 | 06/04/2024 | STORM STRUCTURE REVISIONS |
| 1 | 04/08/2024 | EROSION CONTROL REVISION |

DESIGNED BY: DF/CD
DRAWN BY: DF/JWM
REVIEWED BY: DF

BCE
5438 WADE PARK BLVD, SUITE 420
RALEIGH NC 27607
WWW.BGENC.COM
NC LICENSE #C-4397


LENNAR CORPORTAION
1100 PERIMETER PARK DRIVE, SUITE 112
MORRISVILLE / NORTH CAROLINA / 27560

PARKER RIDGE
82 SCHOOL STREET
ROLESVILLE / NORTH CAROLINA / 27571

# ENLARGED SITE PLAN (6 OF 6)

NORTH CAROLINA PROFESSIONAL SEAL 042839 ENGINEER DEBRA M. FERRI
Signed by: FDC3597483 0F4...
3/25/2025

FILE NUMBER: 8430-03
DATE: 3/24/2025
C2-6


| PHASE DATA TABLE | | | |
|---|---|---|---|
| | | | |
| PHASE 1A | | UNIT TYPE | |
| NUMBER OF LOTS | 55 | FL TH | 38 |
| PARKING SPOTS | 129 | RL TH | 17 |
| OPEN SPACE (AC) | 9.54 | SF | 0 |
| | | | |
| PHASE 1B | | | |
| NUMBER OF LOTS | 142 | FL TH | 27 |
| PARKING SPOTS | 135 | RL TH | 32 |
| OPEN SPACE (AC) | 11.91 | SF | 83 |
| | | | |
| PHASE 2 | | | |
| NUMBER OF LOTS | 78 | SF | 78 |
| OPEN SPACE (AC) | 21.17 | | |

| REV | DATE | DESCRIPTION |
|---|---|---|
| 5 | 03/24/2025 | SUBPHASING, SEWER, & CURB TYPES |
| 4 | 11/04/2024 | AMENITY CENTER REVISIONS |
| 3 | 06/06/2024 | RETAINING WALL LOCATION REVISION |
| 2 | 06/04/2024 | STORM STRUCTURE REVISIONS |
| 1 | 04/08/2024 | EROSION CONTROL REVISION |

DESIGNED BY: DF/CD
DRAWN BY: DF/JWM
REVIEWED BY: DF

BGE
5438 WADE PARK BLVD, SUITE 420
RALEIGH NC 27607
WWW.BGEINC.COM
NC LICENSE #C-4397


LENNAR CORPORTAION
1100 PERIMETER PARK DRIVE, SUITE 112
MORRISVILLE / NORTH CAROLINA / 27560

PARKER RIDGE
82 SCHOOL STREET
ROLESVILLE / NORTH CAROLINA / 27571

PHASING PLAN

NORTH CAROLINA PROFESSIONAL ENGINEER SEAL 023892 DEBRA M. FERM
Signed by: DocuSign FDC3597AB30F4A...
3/25/2025

FILE NUMBER: 8430-03
DATE: 3/24/2025
C2-7

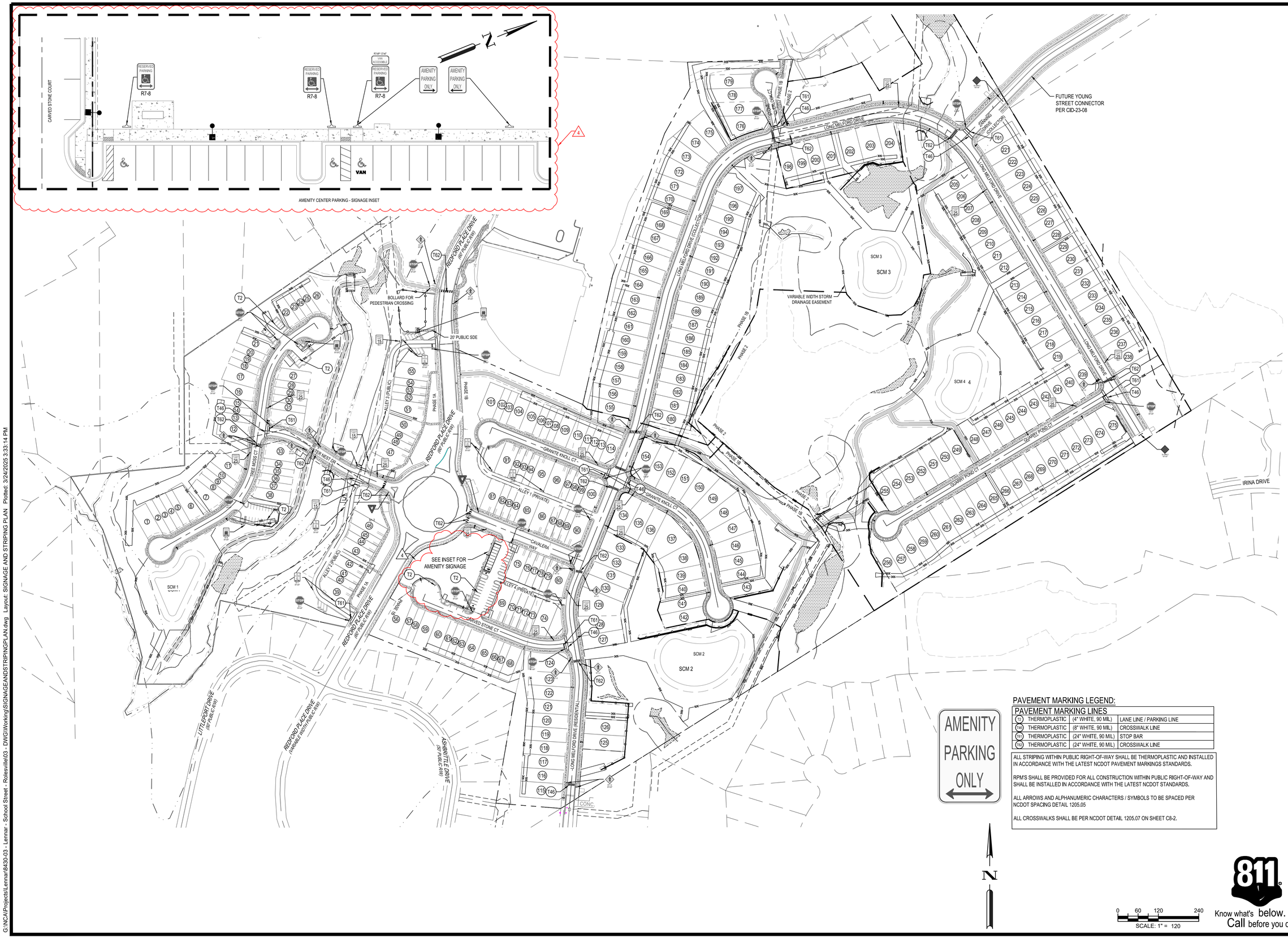


PAVEMENT MARKING LEGEND:

| PAVEMENT MARKING LINES | | | |
|---|---|---|---|
| T2 | THERMOPLASTIC | (4" WHITE, 90 MIL) | LANE LINE / PARKING LINE |
| T46 | THERMOPLASTIC | (8" WHITE, 90 MIL) | CROSSWALK LINE |
| T61 | THERMOPLASTIC | (24" WHITE, 90 MIL) | STOP BAR |
| T62 | THERMOPLASTIC | (24" WHITE, 90 MIL) | CROSSWALK LINE |

ALL STRIPING WITHIN PUBLIC RIGHT-OF-WAY SHALL BE THERMOPLASTIC AND INSTALLED IN ACCORDANCE WITH THE LATEST NCDOT PAVEMENT MARKINGS STANDARDS.

RPM'S SHALL BE PROVIDED FOR ALL CONSTRUCTION WITHIN PUBLIC RIGHT-OF-WAY AND SHALL BE INSTALLED IN ACCORDANCE WITH THE LATEST NCDOT STANDARDS.

ALL ARROWS AND ALPHANUMERIC CHARACTERS / SYMBOLS TO BE SPACED PER NCDOT SPACING DETAIL 1205.05

ALL CROSSWALKS SHALL BE PER NCDOT DETAIL 1205.07 ON SHEET C8-2.

0 60 120 240
SCALE: 1" = 120

811 Know what's below. Call before you dig.

| REV | DATE | DESCRIPTION |
|---|---|---|
| 5 | 03/24/2025 | SUBPHASING, SEWER, & CURB TYPES |
| 4 | 11/04/2024 | AMENITY CENTER REVISIONS |
| 3 | 06/06/2024 | RETAINING WALL LOCATION REVISION |
| 2 | 06/04/2024 | STORM STRUCTURE REVISIONS |
| 1 | 04/08/2024 | EROSION CONTROL REVISION |

DESIGNED BY: DF/CD
DRAWN BY: DF/JWM
REVIEWED BY: DF

BGE
5438 WADE PARK BLVD, SUITE 420
RALEIGH NC 27607
WWW.BGEINC.COM
NC LICENSE #C-4397


LENNAR CORPORTAION
1100 PERIMETER PARK DRIVE, SUITE 112
MORRISVILLE / NORTH CAROLINA / 27560

PARKER RIDGE
82 SCHOOL STREET
ROLESVILLE / NORTH CAROLINA / 27571

# SIGNAGE AND STRIPING PLAN

NORTH CAROLINA PROFESSIONAL ENGINEER SEAL
DEBRA M. FERN
SEAL by: DEBRA FERN
DOCUSIGNED BY:
3/25/2025

FILE NUMBER: 8430-03
DATE: 3/24/2025
C2-8

## PROPOSED UTILITY LEGEND

- PROPOSED DOMESTIC WATER
- PROPOSED FIRE WATER
- PROPOSED IRRIGATION
- PROPOSED SANITARY
- PROPOSED EASEMENT
- SDE — PROPOSED STORM EASEMENT
- PF — TREE PROTECTION FENCE

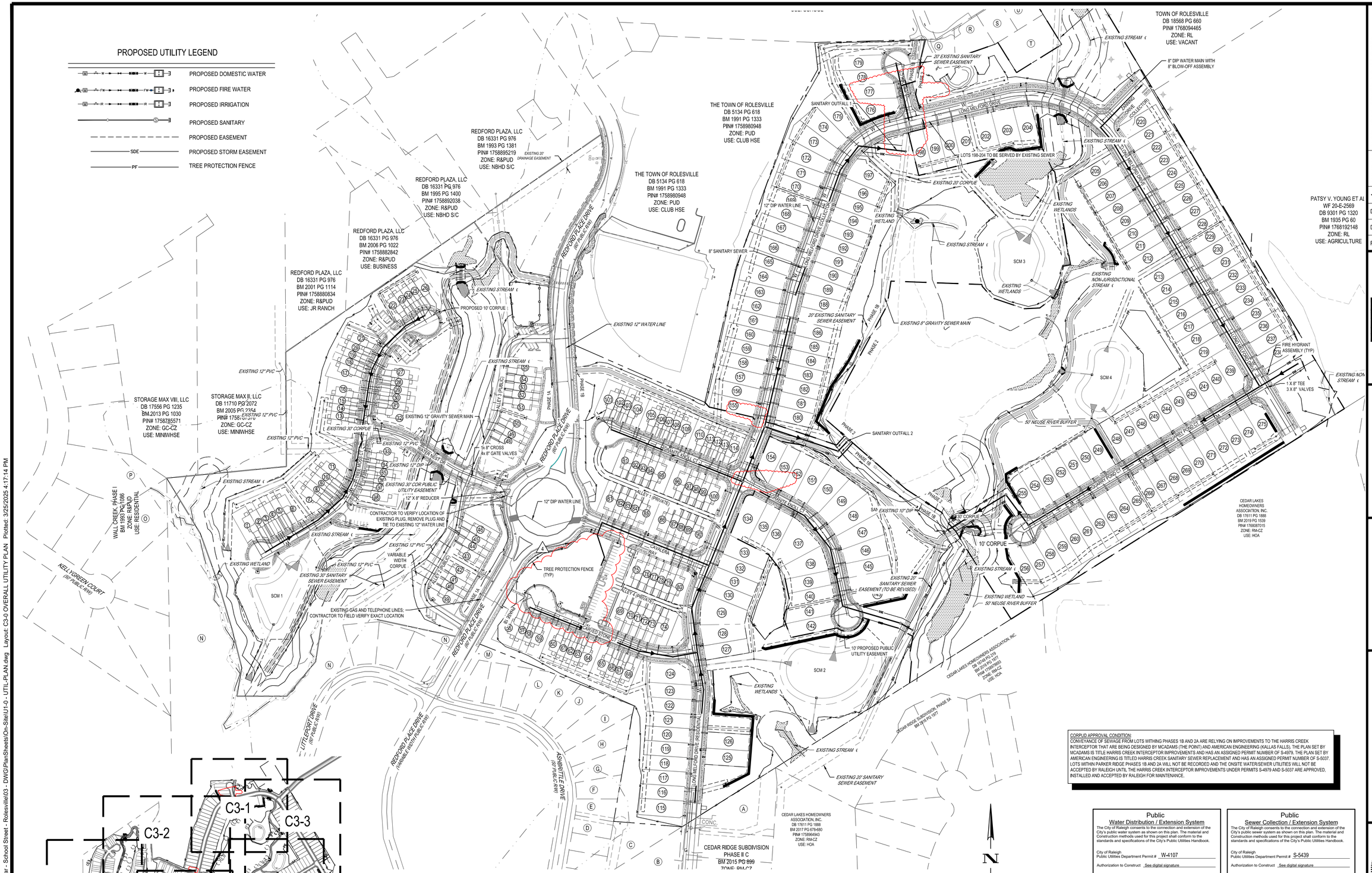


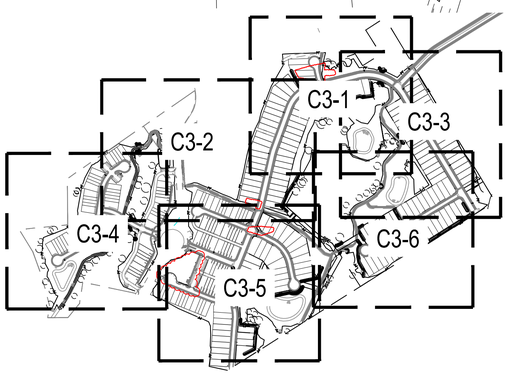


CORPUD APPROVAL CONDITION:
CONVEYANCE OF SEWAGE FROM LOTS WITHING PHASES 1B AND 2A ARE RELYING ON IMPROVEMENTS TO THE HARRIS CREEK INTERCEPTOR THAT ARE BEING DESIGNED BY MCADAMS (THE POINT) AND AMERICAN ENGINEERING (KALLAS FALLS). THE PLAN SET BY MCADAMS IS TITLE HARRIS CREEK INTERCEPTOR IMPROVEMENTS AND HAS AN ASSIGNED PERMIT NUMBER OF S-4979. THE PLAN SET BY AMERICAN ENGINEERING IS TITLED HARRIS CREEK SANITARY SEWER REPLACEMENT AND HAS AN ASSIGNED PERMIT NUMBER OF S-5037. LOTS WITHIN PARKER RIDGE PHASES 1B AND 2A WILL NOT BE RECORDED AND THE ONSITE WATER/SEWER UTILITIES WILL NOT BE ACCEPTED BY RALEIGH UNTIL THE HARRIS CREEK INTERCEPTOR IMPROVEMENTS UNDER PERMITS S-4979 AND S-5037 ARE APPROVED, INSTALLED AND ACCEPTED BY RALEIGH FOR MAINTENANCE.

**Public**
**Water Distribution / Extension System**
The City of Raleigh consents to the connection and extension of the City's public water system as shown on this plan. The material and Construction methods used for this project shall conform to the standards and specifications of the City's Public Utilities Handbook.

City of Raleigh
Public Utilities Department Permit # W-4107

Authorization to Construct See digital signature

**Public**
**Sewer Collection / Extension System**
The City of Raleigh consents to the connection and extension of the City's public sewer system as shown on this plan. The material and Construction methods used for this project shall conform to the standards and specifications of the City's Public Utilities Handbook.

City of Raleigh
Public Utilities Department Permit # S-5439

Authorization to Construct See digital signature

CITY OF RALEIGH - PLANS AUTHORIZED FOR CONSTRUCTION

Electronic Approval: This approval is being issued electronically. This approval is valid only upon the signature of a City of Raleigh Review Officer below. The City will retain a copy of the approved plans. Any work authorized by this approval must proceed in accordance with the plans kept on file with the City. This electronic approval may not be edited once issued. Any modification to this approval once issued will invalidate this approval.

City of Raleigh Development Approval _____

Raleigh Water Review Officer _____

811 Know what's below. Call before you dig.

| REV | DATE | DESCRIPTION |
|---|---|---|
| 5 | 03/24/2025 | SUBPHASING, SEWER, & CURB TYPES |
| 4 | 11/04/2024 | AMENITY CENTER REVISIONS |
| 3 | 06/05/2024 | RETAINING WALL LOCATION REVISION |
| 2 | 06/04/2024 | STORM STRUCTURE REVISIONS |
| 1 | 04/08/2024 | EROSION CONTROL REVISION |

DESIGNED BY: DF/CD
DRAWN BY: DF/JWM
REVIEWED BY: DF


BCE
5438 WADE PARK BLVD, SUITE 420
RALEIGH NC 27607
WWW.BGENC.COM
NC LICENSE #C-4397



LENNAR CORPORATAION
1100 PERIMETER PARK DRIVE, SUITE 112
MORRISVILLE / NORTH CAROLINA / 27560

PARKER RIDGE
82 SCHOOL STREET
ROLESVILLE / NORTH CAROLINA / 27571

# OVERALL UTILITY PLAN

NORTH CAROLINA PROFESSIONAL SEAL 028892 ENGINEER DEBRA M. FERRI 3/25/25

FILE NUMBER: 8430-03
DATE: 3/24/2025
C3-0

G:\NCA\Projects\Lennar\8430-03 - Lennar - School Street - Rolesville\03 - DWG\PlanSheets\On-Site\U1-0 - UTIL-PLAN.dwg Layout: C3-0 OVERALL UTILITY PLAN Plotted: 3/25/2025 4:17:14 PM

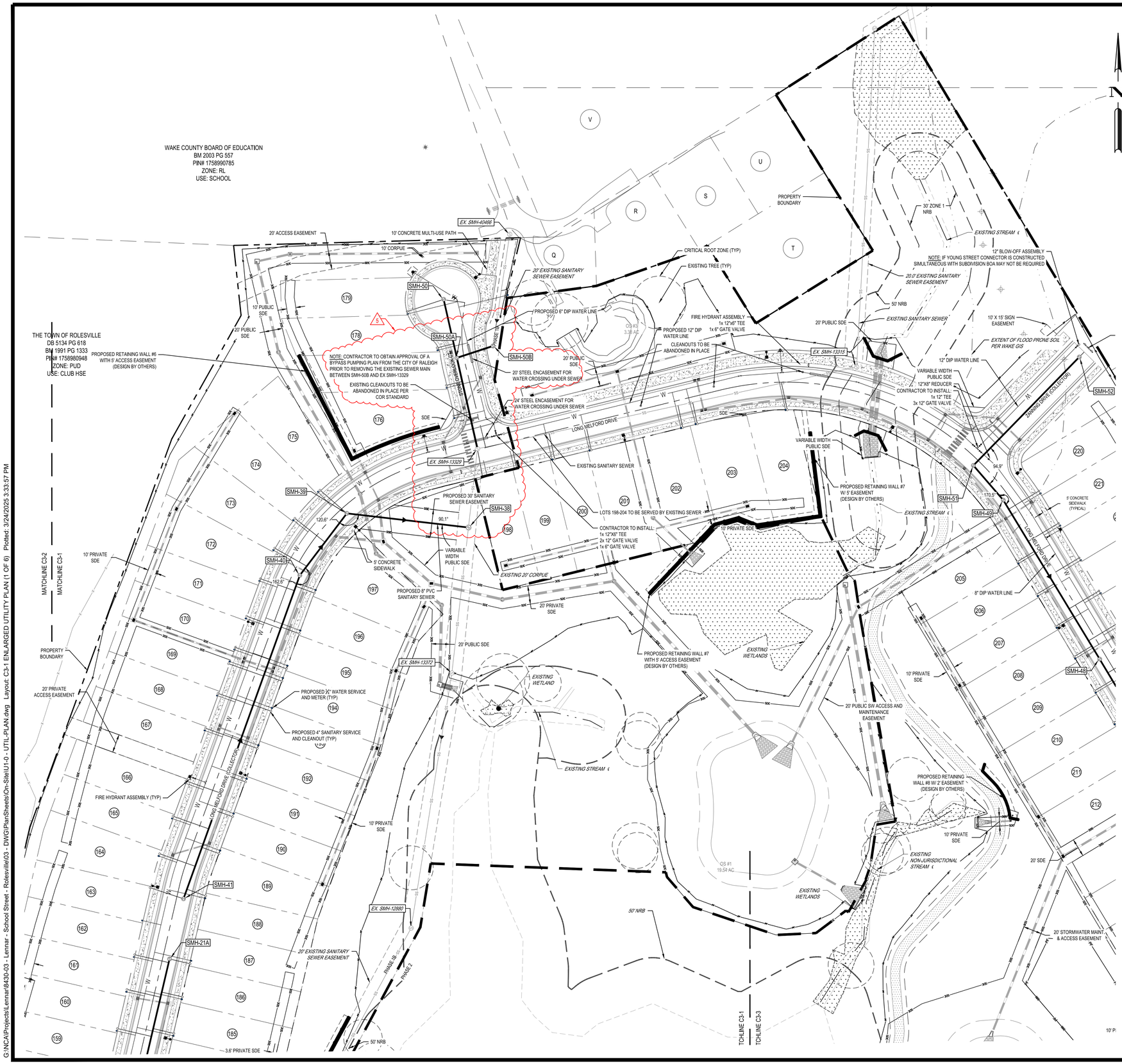


## PROPOSED UTILITY LEGEND

- PROPOSED DOMESTIC WATER
- PROPOSED FIRE WATER
- PROPOSED IRRIGATION
- PROPOSED SANITARY
- PROPOSED EASEMENT
- PROPOSED STORM EASEMENT
- TREE PROTECTION FENCE

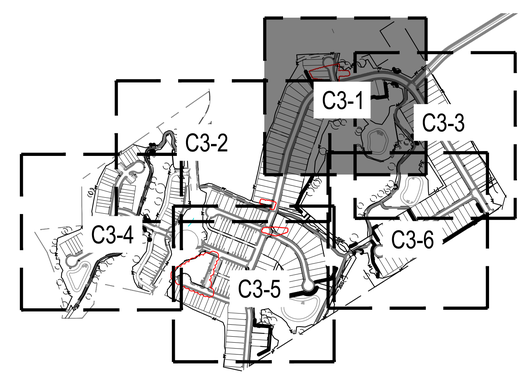


0 25' 50' 100'
SCALE: 1" = 50'

**Public Water Distribution / Extension System**

The City of Raleigh consents to the connection and extension of the City's public water system as shown on this plan. The material and Construction methods used for this project shall conform to the standards and specifications of the City's Public Utilities Handbook.

City of Raleigh Public Utilities Department Permit # W-4107

Authorization to Construct See digital signature

**Public Sewer Collection / Extension System**

The City of Raleigh consents to the connection and extension of the City's public sewer system as shown on this plan. The material and Construction methods used for this project shall conform to the standards and specifications of the City's Public Utilities Handbook.

City of Raleigh Public Utilities Department Permit # S-5439

Authorization to Construct See digital signature

**CITY OF RALEIGH - PLANS AUTHORIZED FOR CONSTRUCTION**

Electronic Approval: This approval is being issued electronically. This approval is valid only upon the signature of a City of Raleigh Review Officer below. The City will retain a copy of the approved plans. Any work authorized by this approval must proceed in accordance with the plans kept on file with the City. This electronic approval may not be edited once issued. Any modification to this approval once issued will invalidate this approval.

City of Raleigh Development Approval _____

Raleigh Water Review Officer _____

811 Know what's below. Call before you dig.

| REV | DATE | DESCRIPTION |
|---|---|---|
| 5 | 03/24/2025 | SUBPHASING, SEWER, & CURB TYPES |
| 4 | 11/04/2024 | AMENITY CENTER REVISIONS |
| 3 | 06/06/2024 | RETAINING WALL LOCATION REVISION |
| 2 | 06/04/2024 | STORM STRUCTURE REVISIONS |
| 1 | 04/08/2024 | EROSION CONTROL REVISION |

DESIGNED BY: DF/CD
DRAWN BY: DF/JWM
REVIEWED BY: DF

BGE
5438 WADE PARK BLVD, SUITE 420
RALEIGH NC 27607
WWW.BGEINC.COM
NC LICENSE #C-4397



LENNAR CORPORTAION
1100 PERIMETER PARK DRIVE, SUITE 112
MORRISVILLE / NORTH CAROLINA / 27560

PARKER RIDGE
82 SCHOOL STREET
ROLESVILLE / NORTH CAROLINA / 27571

# ENLARGED UTILITY PLAN (1 OF 6)

NORTH CAROLINA PROFESSIONAL SEAL 049390 ENGINEER DEBRA M. FERM
Signed by: DocuSign Envelope ID: F2C3697A6B9F4...
3/25/2025

FILE NUMBER: 8430-03
DATE: 3/24/2025
C3-1

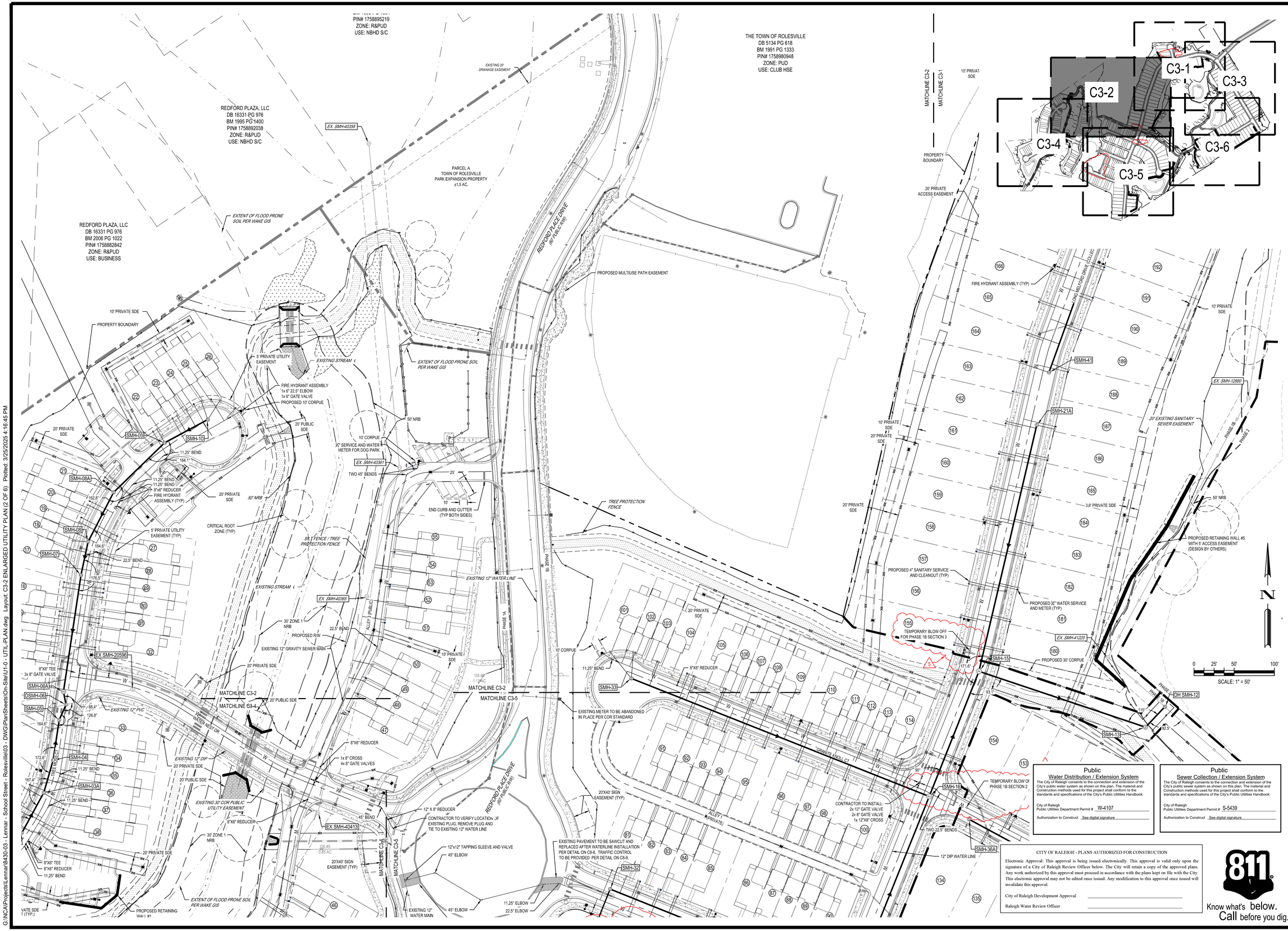


## Public Water Distribution / Extension System

The City of Raleigh consents to the connection and extension of the City's public water system as shown on this plan. The material and Construction methods used for this project shall conform to the standards and specifications of the City's Public Utilities Handbook.

City of Raleigh Public Utilities Department Permit # W-4107

Authorization to Construct See digital signature

## Public Sewer Collection / Extension System

The City of Raleigh consents to the connection and extension of the City's public sewer system as shown on this plan. The material and Construction methods used for this project shall conform to the standards and specifications of the City's Public Utilities Handbook.

City of Raleigh Public Utilities Department Permit # S-5439

Authorization to Construct See digital signature

## CITY OF RALEIGH - PLANS AUTHORIZED FOR CONSTRUCTION

Electronic Approval: This approval is being issued electronically. This approval is valid only upon the signature of a City of Raleigh Review Officer below. The City will retain a copy of the approved plans. Any work authorized by this approval must proceed in accordance with the plans kept on file with the City. This electronic approval may not be edited once issued. Any modification to this approval once issued will invalidate this approval.

City of Raleigh Development Approval _____

Raleigh Water Review Officer _____

811 Know what's below. Call before you dig.

| REV | DATE | DESCRIPTION |
|---|---|---|
| 1 | 03/24/2025 | SUBPHASING, SEWER, & CURB TYPES |
| 2 | 11/04/2024 | AMENITY CENTER REVISIONS |
| 3 | 06/05/2024 | RETAINING WALL LOCATION REVISION |
| 4 | 06/04/2024 | STORM STRUCTURE REVISIONS |
| 5 | 04/08/2024 | EROSION CONTROL REVISION |

DESIGNED BY: DF/CD

DRAWN BY: DF/JWM

REVIEWED BY: DF

BGE
5438 WADE PARK BLVD, SUITE 420
RALEIGH NC 27607
WWW.BGEINC.COM
NC LICENSE #C-4397



LENNAR CORPORATION
1100 PERIMETER PARK DRIVE, SUITE 112
MORRISVILLE / NORTH CAROLINA / 27560

PARKER RIDGE
82 SCHOOL STREET
ROLESVILLE / NORTH CAROLINA / 27571

# ENLARGED UTILITY PLAN (2 OF 6)

NORTH CAROLINA PROFESSIONAL SEAL 028892 ENGINEER DEBRA M. FERRELL 3/25/25

FILE NUMBER: 8430-03

DATE: 3/24/2025

C3-2

G:\NCA\Projects\Lennar\8430-03 - Lennar - School Street - Rolesville\03 - DWG\PlanSheets\On-Site\U1-0 - UTIL-PLAN.dwg Layout: C3-2 ENLARGED UTILITY PLAN (2 OF 6) Plotted: 3/25/2025 4:16:45 PM

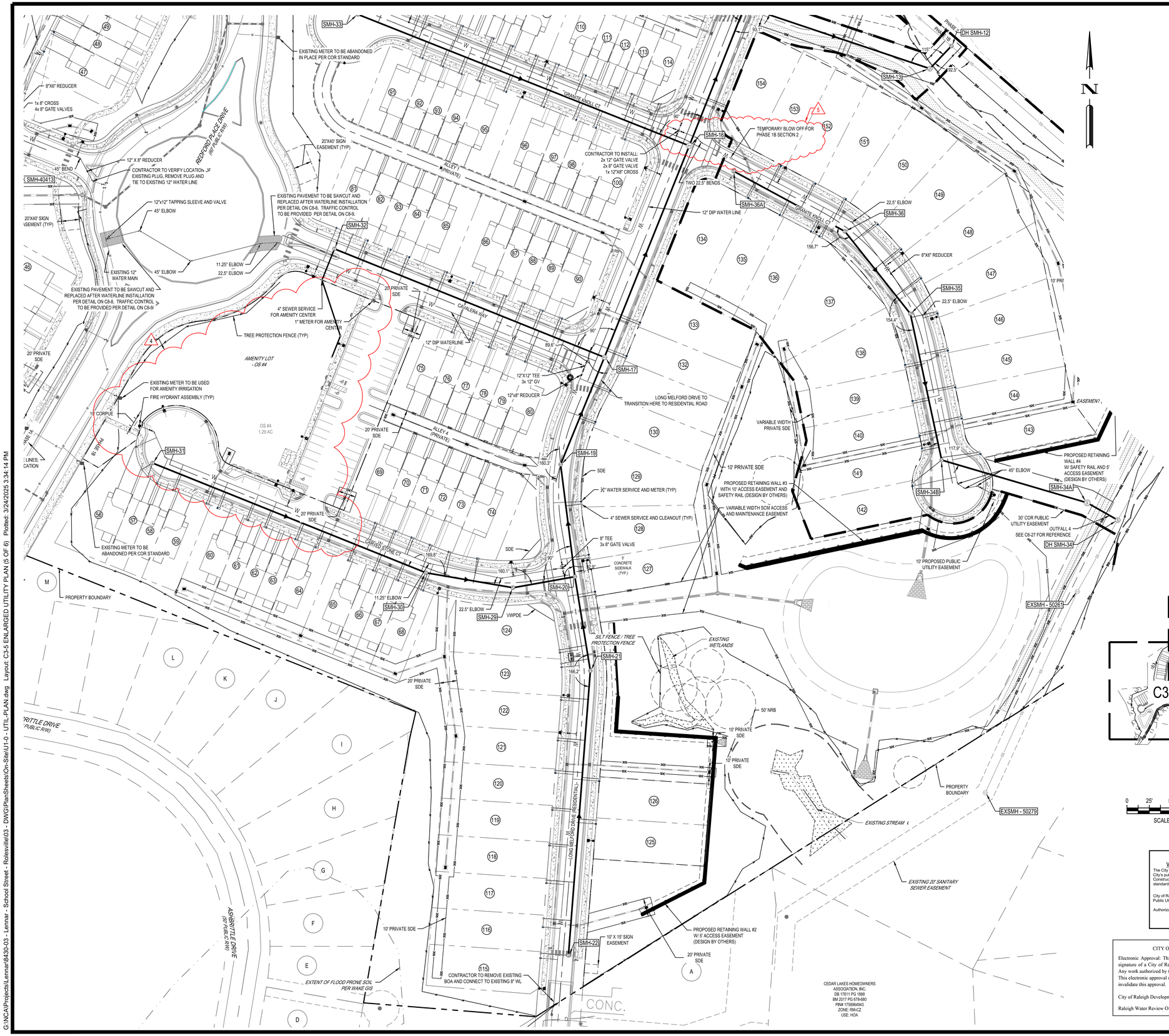


## PROPOSED UTILITY LEGEND

- PROPOSED DOMESTIC WATER
- PROPOSED FIRE WATER
- PROPOSED IRRIGATION
- PROPOSED SANITARY
- PROPOSED EASEMENT
- PROPOSED STORM EASEMENT
- TREE PROTECTION FENCE

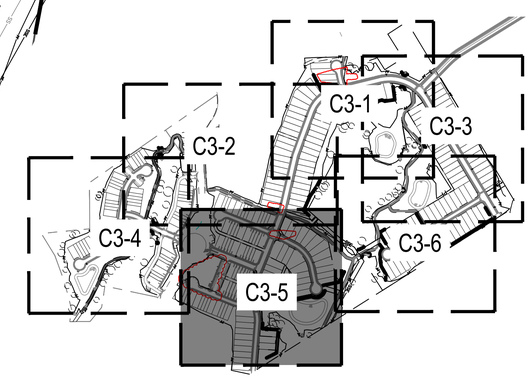


0 25' 50' 100'
SCALE: 1" = 50'

**Public**
**Water Distribution / Extension System**
The City of Raleigh consents to the connection and extension of the City's public water system as shown on this plan. The material and Construction methods used for this project shall conform to the standards and specifications of the City's Public Utilities Handbook.

City of Raleigh
Public Utilities Department Permit # W-4107

Authorization to Construct See digital signature

**Public**
**Sewer Collection / Extension System**
The City of Raleigh consents to the connection and extension of the City's public sewer system as shown on this plan. The material and Construction methods used for this project shall conform to the standards and specifications of the City's Public Utilities Handbook.

City of Raleigh
Public Utilities Department Permit # S-5439

Authorization to Construct See digital signature

CITY OF RALEIGH - PLANS AUTHORIZED FOR CONSTRUCTION

Electronic Approval: This approval is being issued electronically. This approval is valid only upon the signature of a City of Raleigh Review Officer below. The City will retain a copy of the approved plans. Any work authorized by this approval must proceed in accordance with the plans kept on file with the City. This electronic approval may not be edited once issued. Any modification to this approval once issued will invalidate this approval.

City of Raleigh Development Approval _____

Raleigh Water Review Officer _____

811 Know what's below. Call before you dig.

| REV | DATE | DESCRIPTION |
|---|---|---|
| 5 | 03/24/2025 | SUBPHASING, SEWER, & CURB TYPES |
| 4 | 11/04/2024 | AMENITY CENTER REVISIONS |
| 3 | 06/06/2024 | RETAINING WALL LOCATION REVISION |
| 2 | 06/04/2024 | STORM STRUCTURE REVISIONS |
| 1 | 04/08/2024 | EROSION CONTROL REVISION |

DESIGNED BY: DF/CD
DRAWN BY: DF/JWM
REVIEWED BY: DF

BCE
5438 WADE PARK BLVD, SUITE 420
RALEIGH NC 27607
WWW.BGEINC.COM
NC LICENSE #C-4397


LENNAR CORPORTAION
1100 PERIMETER PARK DRIVE, SUITE 112
MORRISVILLE / NORTH CAROLINA / 27560

PARKER RIDGE
82 SCHOOL STREET
ROLESVILLE / NORTH CAROLINA / 27571

# ENLARGED UTILITY PLAN (5 OF 6)

NORTH CAROLINA PROFESSIONAL SEAL 042890 ENGINEER DEBRA M. FERRELL
Signed by: DocuSign Envelope ID: 7DC35974B30F4...
3/25/2025

FILE NUMBER: 8430-03
DATE: 3/24/2025
C3-5

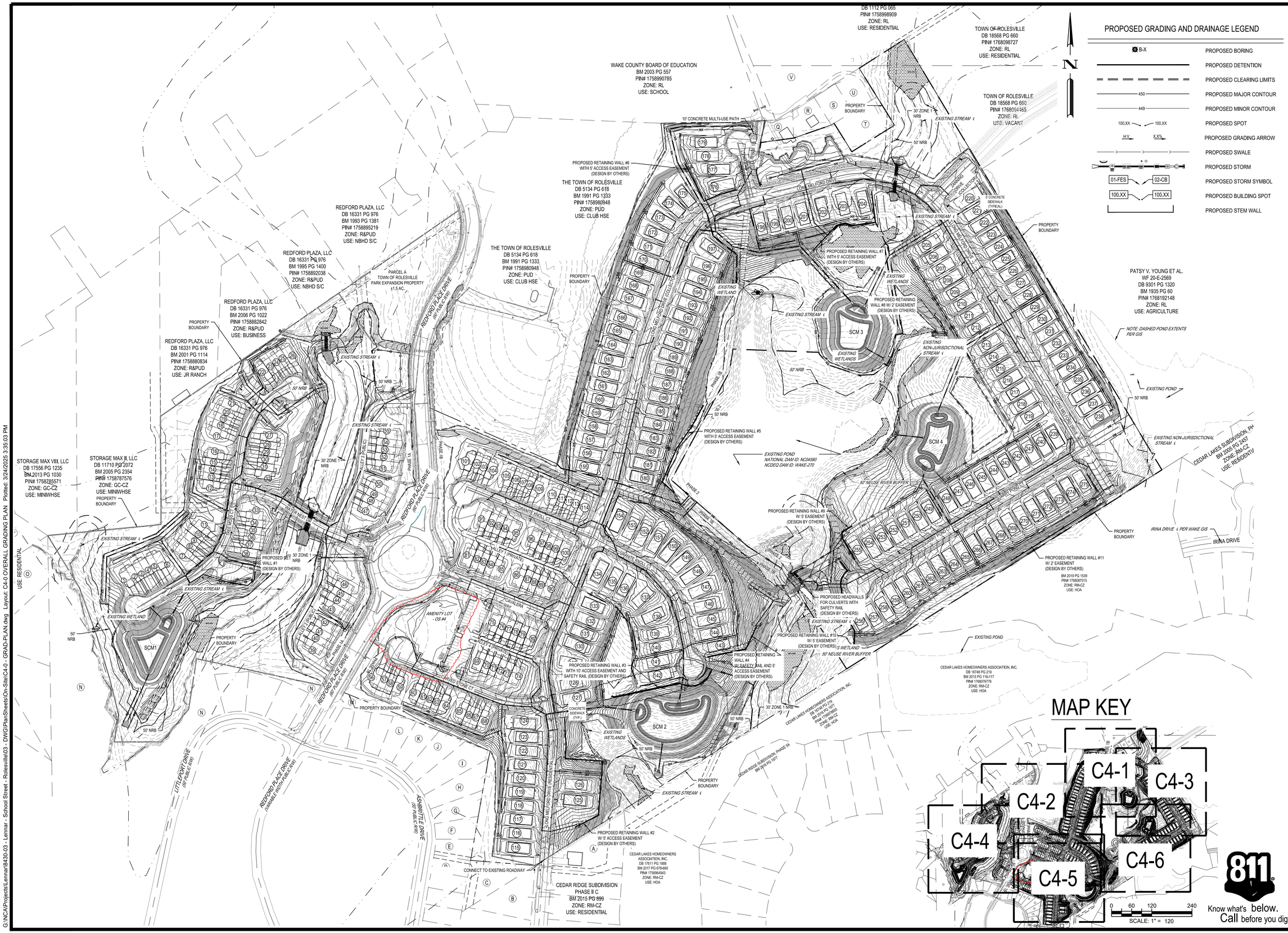


G:\NCA\Projects\Lennar\8430-03 - Lennar - School Street - Rolesville\03 - DWG\PlanSheets\On-Site\C4-0 - GRAD-PLAN.dwg Layout: C4-0 OVERALL GRADING PLAN Plotted: 3/24/2025 3:35:03 PM

| REV | DATE | DESCRIPTION |
|---|---|---|
| 1 | 03/24/2025 | SUBPHASING, SEWER, & CURB TYPES |
| 1 | 11/04/2024 | AMENITY CENTER REVISIONS |
| 1 | 06/06/2024 | RETAINING WALL LOCATION REVISION |
| 1 | 06/04/2024 | STORM STRUCTURE REVISIONS |
| 1 | 04/08/2024 | EROSION CONTROL REVISION |

DESIGNED BY: DF/CD
DRAWN BY: DF/JWM
REVIEWED BY: DF

BGE
5438 WADE PARK BLVD, SUITE 420
RALEIGH NC 27607
WWW.BGEINC.COM
NC LICENSE #C-4397


LENNAR CORPORATION
1100 PERIMETER PARK DRIVE, SUITE 112
MORRISVILLE / NORTH CAROLINA / 27560

PARKER RIDGE
82 SCHOOL STREET
ROLESVILLE / NORTH CAROLINA / 27571

# OVERALL GRADING PLAN

NORTH CAROLINA PROFESSIONAL SEAL 022889 ENGINEER DEBRA W. FERN
3/25/2025

FILE NUMBER: 8430-03
DATE: 3/24/2025
C4-0

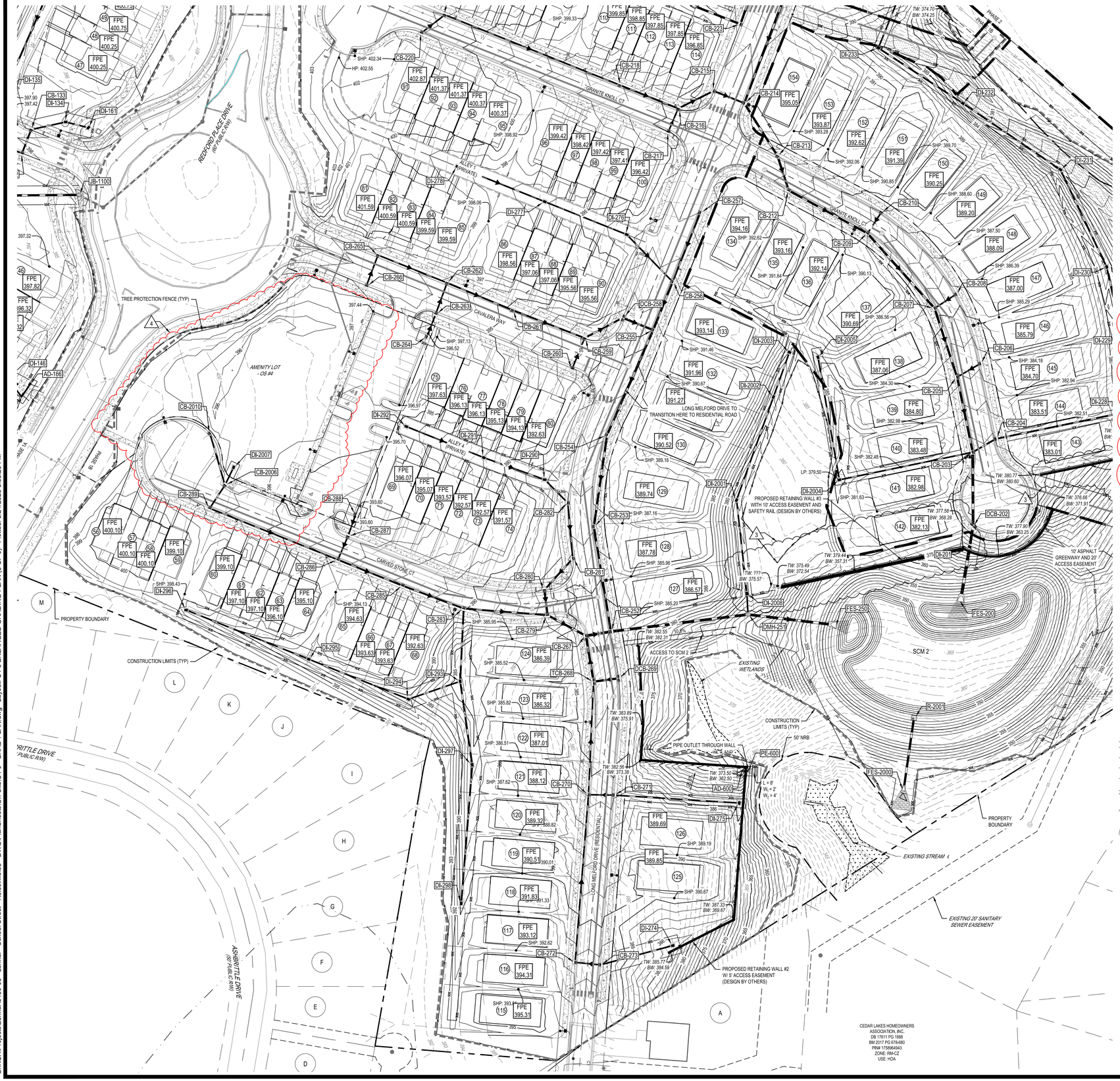


## PROPOSED GRADING AND DRAINAGE LEGEND

| | |
|---|---|
| B-X | PROPOSED BORING |
| | PROPOSED DETENTION |
| | PROPOSED CLEARING LIMITS |
| 450 | PROPOSED MAJOR CONTOUR |
| 449 | PROPOSED MINOR CONTOUR |
| 100.XX 100.XX | PROPOSED SPOT |
| H:V X.X% | PROPOSED GRADING ARROW |
| | PROPOSED SWALE |
| | PROPOSED STORM |
| 01-FES 02-CB | PROPOSED STORM SYMBOL |
| 100.XX 100.XX | PROPOSED BUILDING SPOT |
| | PROPOSED STEM WALL |
| FPE | FINISHED PAD ELEVATION |

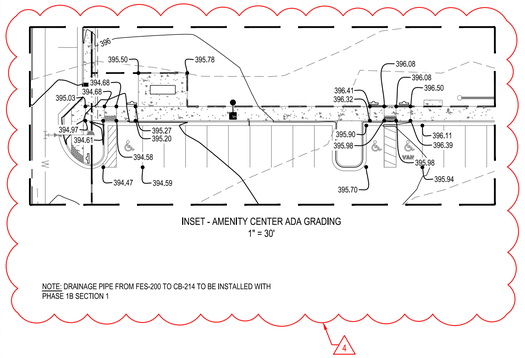

INSET - AMENITY CENTER ADA GRADING
1" = 30'

NOTE: DRAINAGE PIPE FROM FES-200 TO CB-214 TO BE INSTALLED WITH PHASE 1B SECTION 1

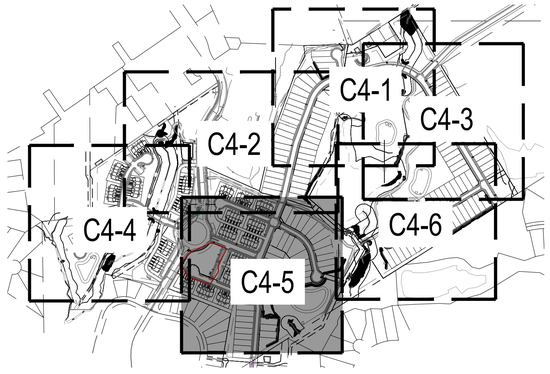


0 25' 50' 100'
SCALE: 1" = 50'

811 Know what's below. Call before you dig.

| REV | DATE | DESCRIPTION |
|---|---|---|
| 1 | 03/24/2025 | SUBPHASING, SEWER, & CURB TYPES |
| 1 | 11/04/2024 | AMENITY CENTER REVISIONS |
| 1 | 06/06/2024 | RETAINING WALL LOCATION REVISION |
| 1 | 06/04/2024 | STORM STRUCTURE REVISIONS |
| 1 | 04/08/2024 | EROSION CONTROL REVISION |

DESIGNED BY: DF/CD
DRAWN BY: DF/JWM
REVIEWED BY: DF

BGE
5438 WADE PARK BLVD, SUITE 420
RALEIGH NC 27607
WWW.BGEINC.COM
NC LICENSE #C-4397


LENNAR CORPORATAION
1100 PERIMETER PARK DRIVE, SUITE 112
MORRISVILLE / NORTH CAROLINA / 27560

PARKER RIDGE
82 SCHOOL STREET
ROLESVILLE / NORTH CAROLINA / 27571

ENLARGED GRADING PLAN (5 OF 6)

NORTH CAROLINA PROFESSIONAL ENGINEER SEAL
DEBRA M. FERRY
3/25/2025

FILE NUMBER: 8430-03
DATE: 3/24/2025
C4-5

G:\NCA\Projects\Lennar\8430-03 - Lennar - School Street - Rolesville\03 - DWG\PlanSheets\On-Site\C4-0 - GRAD-PLAN.dwg Layout: C4-5 ENLARGED GRADING PLAN (5 OF 6) Plotted: 3/24/2025 3:35:20 PM

## SCM 1

### STRUCTURE DATA TABLE

| STRUCTURE NAME | RIM ELEV. | PIPE IN SIZE | INV. IN | INV. OUT | PIPE OUT SIZE | PIPE OUT TO NODE |
|---|---|---|---|---|---|---|
| AD-165 | 394.70 | 15" | 391.40 (NE) | 391.20 (NW) | 15" | DI-146 |
| AD-166 | 394.67 | | | 391.57 (SW) | 15" | AD-165 |
| CB-101 | 395.83 | 36"<br>18" | 383.10 (NW)<br>385.73 (NE) | 383.00 (SW) | 36" | FES-100 |
| CB-103 | 397.43 | 30"<br>18" | 384.11 (NE)<br>385.28 (E) | 384.01 (SW) | 36" | DCB-102 |
| CB-104 | 397.62 | 18" | 385.52 (SE) | 385.42 (W) | 18" | CB-103 |
| CB-105 | 398.98 | 18"<br>30" | 392.36 (E)<br>384.51 (N) | 384.41 (SW) | 30" | CB-103 |
| CB-106 | 399.33 | | | 392.50 (W) | 18" | CB-105 |
| CB-107 | 400.83 | 18"<br>30"<br>15" | 391.93 (E)<br>384.95 (N)<br>390.94 (NW) | 384.85 (S) | 30" | CB-105 |
| CB-108 | 401.10 | | | 392.50 (W) | 18" | CB-107 |
| CB-109 | 402.99 | 24"<br>30" | 386.18 (NE)<br>385.68 (E) | 385.48 (S) | 30" | CB-107 |
| CB-110 | 403.70 | 24" | 389.01 (N) | 386.38 (SW) | 24" | CB-109 |
| CB-111 | 405.97 | 24"<br>15" | 389.76 (NE)<br>400.04 (W) | 389.66 (S) | 24" | CB-110 |
| CB-112 | 405.99 | | | 400.55 (E) | 15" | CB-111 |
| CB-113 | 405.45 | 24"<br>18"<br>15" | 390.42 (NW)<br>393.77 (NE)<br>399.13 (SE) | 390.22 (SW) | 24" | CB-111 |
| CB-114 | 405.45 | 24" | 392.16 (NW) | 390.56 (SE) | 24" | CB-113 |
| CB-115 | 404.55 | 18"<br>15" | 399.45 (SE)<br>396.48 (NE) | 394.22 (SW) | 18" | CB-113 |
| CB-117 | 404.75 | | | 399.56 (NW) | 18" | CB-115 |
| CB-118 | 406.13 | 15"<br>24" | 398.03 (W)<br>392.48 (NE) | 392.28 (SE) | 24" | CB-114 |
| CB-119 | 405.40 | 24"<br>15" | 398.06 (NW)<br>399.60 (SE) | 392.86 (SW) | 24" | CB-118 |
| CB-127 | 400.50 | 30" | 386.13 (E) | 386.03 (W) | 30" | CB-109 |
| CB-128 | 397.85 | 30"<br>15"<br>18" | 386.69 (SE)<br>390.00 (SW)<br>388.25 (NE) | 386.59 (W) | 30" | CB-127 |
| CB-130 | 397.69 | 24"<br>18" | 387.80 (SW)<br>389.50 (NE) | 387.60 (NW) | 24" | TCB-129 |
| CB-131 | 398.13 | 18"<br>18" | 388.04 (S)<br>388.44 (E) | 387.94 (NE) | 24" | CB-130 |

### STRUCTURE DATA TABLE

| STRUCTURE NAME | RIM ELEV. | PIPE IN SIZE | INV. IN | INV. OUT | PIPE OUT SIZE | PIPE OUT TO NODE |
|---|---|---|---|---|---|---|
| CB-132 | 398.20 | 18" | 390.73 (N) | 390.53 (W) | 18" | CB-131 |
| CB-133 | 398.32 | 15" | 391.20 (E) | 391.00 (S) | 18" | CB-132 |
| CB-140 | 404.25 | | | 393.55 (SW) | 18" | DI-139 |
| CB-147 | 396.08 | 18" | 387.38 (E) | 387.18 (SW) | 18" | CB-101 |
| CB-153 | 396.67 | 18" | 385.20 (SW) | 385.00 (SE) | 18" | FES-152 |
| CB-153A | 396.35 | | | 388.00 (NE) | 18" | CB-153 |
| CB-154 | 394.31 | 18" | 388.00 (E) | 387.80 (W) | 18" | CB-147 |
| CB-155 | 393.43 | | | 388.41 (W) | 18" | CB-154 |
| CB-163 | 404.63 | | | 399.88 (NW) | 15" | CB-119 |
| CB-164 | 396.22 | | | 391.47 (NE) | 15" | DCB-102 |
| DCB-102 | 395.83 | 36"<br>18"<br>15" | 383.44 (NE)<br>385.77 (NW)<br>390.16 (SW) | 383.24 (SE) | 36" | CB-101 |
| DDI-143 | 393.41 | 15"<br>15" | 389.45 (SW)<br>389.56 (SE) | 389.35 (NE) | 18" | DI-142 |
| DI-120 | 394.64 | 15"<br>18" | 386.64 (SW)<br>386.64 (NE) | 386.44 (SE) | 18" | DCB-102 |
| DI-121 | 394.97 | | | 387.53 (NE) | 15" | DI-120 |
| DI-122 | 389.71 | | | 386.50 (W) | 18" | DI-156 |
| DI-123 | 402.15 | 15" | 391.77 (N) | 391.57 (SE) | 15" | CB-107 |
| DI-124 | 404.23 | | | 395.04 (S) | 15" | DI-123 |
| DI-125 | 405.16 | | | 399.44 (E) | 15" | CB-118 |
| DI-126 | 403.10 | 18" | 398.71 (NE) | 398.51 (SE) | 24" | CB-119 |
| DI-134 | 397.76 | 15" | 392.14 (E) | 391.94 (W) | 15" | CB-133 |
| DI-135 | 397.67 | 18" | 389.87 (NE) | 389.77 (SW) | 18" | CB-130 |
| DI-136 | 399.36 | 18"<br>15" | 391.00 (N)<br>391.00 (E) | 390.80 (SW) | 18" | DI-135 |
| DI-137 | 399.98 | 18" | 391.87 (N) | 391.77 (S) | 18" | DI-136 |

### STRUCTURE DATA TABLE

| STRUCTURE NAME | RIM ELEV. | PIPE IN SIZE | INV. IN | INV. OUT | PIPE OUT SIZE | PIPE OUT TO NODE |
|---|---|---|---|---|---|---|
| DI-138 | 400.66 | 18" | 392.55 (NE) | 392.45 (S) | 18" | DI-137 |
| DI-139 | 401.93 | 18" | 393.08 (NE) | 392.98 (SW) | 18" | DI-138 |
| DI-141 | 396.32 | 18" | 388.39 (S) | 388.29 (N) | 18" | CB-131 |
| DI-142 | 394.25 | 18" | 388.92 (SW) | 388.82 (N) | 18" | DI-141 |
| DI-144 | 394.20 | 15" | 390.08 (S) | 389.98 (NE) | 15" | DDI-143 |
| DI-145 | 394.60 | | | 390.61 (N) | 15" | DI-144 |
| DI-146 | 394.59 | 15" | 390.95 (SE) | 390.85 (NW) | 15" | DDI-143 |
| DI-150 | 402.80 | | | 399.30 (SW) | 18" | DI-126 |
| DI-151 | 404.38 | | | 400.13 (NW) | 15" | CB-113 |
| DI-156 | 393.38 | 18" | 385.94 (E) | 385.74 (NW) | 18" | CB-104 |
| DI-158 | 397.22 | | | 389.00 (SW) | 18" | DI-120 |
| DI-160 | 399.84 | | | 394.41 (W) | 15" | DI-136 |
| DI-161 | 396.96 | | | 392.64 (W) | 15" | DI-134 |
| FES-100 | 386.27 | 36" | 382.44 (NE) | | | |
| FES-152 | 386.71 | 18" | 384.50 (NW) | | | |
| FES-1000 | 380.98 | 24" | 378.23 (NE) | | | |
| R-1001 | 387.90 | | | 379.00 (SW) | 24" | FES-1000 |
| TCB-116 | 402.70 | | | 397.75 (SW) | 15" | CB-115 |
| TCB-129 | 397.10 | 24" | 387.18 (SE) | 387.08 (NW) | 30" | CB-128 |
| YI-148 | 393.44 | | | 388.75 (SW) | 18" | CB-128 |
| YI-157 | 396.90 | | | 392.35 (NE) | 15" | CB-128 |

### PIPE TABLE

| NAME | SIZE | LENGTH | SLOPE | MATERIAL |
|---|---|---|---|---|
| CB-101 TO CB-147 | 18" | 47.80' | 3.04% | 18" RCP |
| CB-101 TO TCB-102 | 36" | 27.02' | 0.50% | 36" RCP |
| CB-103 TO CB-104 | 18" | 28.22' | 0.50% | 18" RCP |
| CB-103 TO CB-105 | 30" | 60.86' | 0.50% | 30" RCP |
| CB-104 TO DI-156 | 18" | 24.75' | 0.89% | 18" RCP |
| CB-105 TO CB-106 | 18" | 28.91' | 0.50% | 18" RCP |
| CB-105 TO CB-107 | 30" | 68.34' | 0.50% | 30" RCP |
| CB-107 TO CB-108 | 18" | 28.99' | 1.95% | 18" RCP |
| CB-107 TO CB-109 | 30" | 85.91' | 0.62% | 30" RCP |
| CB-107 TO DI-123 | 15" | 116.76' | 0.54% | 15" RCP |
| CB-109 TO CB-110 | 24" | 39.10' | 0.50% | 24" RCP |
| CB-109 TO CB-127 | 30" | 70.28' | 0.50% | 30" RCP |
| CB-110 TO CB-111 | 24" | 110.53' | 0.59% | 24" RCP |
| CB-111 TO CB-112 | 15" | 27.01' | 1.88% | 15" RCP |
| CB-111 TO CB-113 | 24" | 82.07' | 0.56% | 24" RCP |
| CB-113 TO CB-114 | 24" | 27.05' | 0.50% | 24" RCP |
| CB-113 TO CB-115 | 18" | 62.12' | 0.72% | 18" RCP |
| CB-113 TO DI-151 | 15" | 34.44' | 2.92% | 15" RCP |
| CB-114 TO CB-118 | 24" | 24.76' | 0.50% | 24" RCP |
| CB-115 TO CB-117 | 18" | 17.58' | 0.66% | 18" RCP |

### PIPE TABLE

| NAME | SIZE | LENGTH | SLOPE | MATERIAL |
|---|---|---|---|---|
| CB-115 TO DCB-116 | 15" | 101.81' | 1.25% | 15" RCP |
| CB-118 TO CB-119 | 24" | 63.17' | 0.60% | 24" RCP |
| CB-118 TO DI-125 | 15" | 86.36' | 1.63% | 15" RCP |
| CB-119 TO DI-126 | 24" | 89.76' | 0.50% | 24" RCP |
| CB-127 TO CB-128 | 30" | 91.63' | 0.50% | 30" RCP |
| CB-128 TO DCB-129 | 30" | 77.54' | 0.50% | 30" RCP |
| CB-128 TO YI-148 | 18" | 27.21' | 1.84% | 18" RCP |
| CB-128 TO YI-157 | 15" | 44.84' | 5.24% | 15" RCP |
| CB-130 TO CB-131 | 24" | 27.01' | 0.50% | 24" RCP |
| CB-130 TO DI-135 | 18" | 31.87' | 0.85% | 18" RCP |
| CB-131 TO CB-132 | 18" | 62.17' | 3.36% | 18" RCP |
| CB-131 TO DI-141 | 18" | 49.93' | 0.50% | 18" RCP |
| CB-132 TO CB-133 | 18" | 27.00' | 1.00% | 18" RCP |
| CB-133 TO DI-134 | 15" | 37.54' | 1.98% | 15" RCP |
| CB-147 TO CB-154 | 18" | 80.81' | 0.52% | 18" RCP |
| CB-153 TO CB-153A | 18" | 70.42' | 3.98% | 18" RCP |
| CB-154 TO CB-155 | 18" | 60.52' | 0.68% | 18" RCP |
| DCB-129 TO CB-130 | 24" | 84.94' | 0.50% | 24" RCP |
| DDI-143 TO DI-144 | 15" | 105.80' | 0.50% | 15" RCP |
| DDI-143 TO DI-146 | 15" | 102.20' | 1.26% | 15" RCP |

## SCM 2

### STRUCTURE DATA TABLE

| STRUCTURE NAME | RIM ELEV. | PIPE IN SIZE | INV. IN | INV. OUT | PIPE OUT SIZE | PIPE OUT TO NODE |
|---|---|---|---|---|---|---|
| CB-203 | 380.72 | 24"<br>18"<br>15" | 371.00 (N)<br>365.54 (NE)<br>374.84 (W) | 364.54 (S) | 30" | DCB-202 |
| CB-204 | 381.20 | 18" | 365.92 (E) | 365.82 (SW) | 18" | CB-203 |
| CB-205 | 383.25 | 24"<br>15" | 375.27 (N)<br>379.07 (NE) | 375.17 (S) | 24" | CB-203 |
| CB-206 | 383.54 | | | 379.50 (SW) | 15" | CB-205 |
| CB-207 | 385.65 | 24"<br>15" | 378.70 (NW)<br>380.78 (NE) | 378.60 (S) | 24" | CB-205 |
| CB-208 | 385.72 | | | 380.92 (SW) | 15" | CB-207 |
| CB-209 | 389.00 | 24"<br>15" | 382.66 (NW)<br>383.51 (NE) | 382.46 (SE) | 24" | CB-207 |
| CB-210 | 389.01 | | | 383.81 (SW) | 15" | CB-209 |
| CB-212 | 391.83 | 24" | 385.14 (N) | 385.04 (SE) | 24" | CB-209 |
| CB-213 | 392.64 | 24" | 385.63 (NW) | 385.53 (S) | 24" | CB-212 |
| CB-214 | 394.54 | 18"<br>24" | 387.30 (W)<br>386.75 (N) | 386.55 (SE) | 24" | CB-213 |
| CB-215 | 394.55 | 18" | 389.80 (SW) | 387.70 (E) | 18" | CB-214 |
| CB-216 | 395.25 | 18"<br>15" | 391.00 (W)<br>391.00 (SW) | 390.80 (NE) | 18" | CB-215 |
| CB-217 | 395.26 | | | 391.17 (NE) | 15" | CB-216 |
| CB-218 | 396.49 | 15" | 392.37 (W) | 392.12 (E) | 18" | CB-216 |
| CB-219 | 401.08 | 15" | 396.24 (SW) | 396.04 (E) | 15" | CB-218 |
| CB-220 | 401.45 | | | 396.41 (NE) | 15" | CB-219 |
| CB-223 | 393.90 | 24" | 389.16 (W) | 388.96 (N) | 24" | TCB-222 |
| CB-224 | 394.48 | 15"<br>15" | 390.07 (W)<br>390.90 (N) | 389.00 (S) | 24" | DCB-221 |
| CB-225 | 394.37 | | | 390.25 (E) | 15" | CB-224 |

### STRUCTURE DATA TABLE

| STRUCTURE NAME | RIM ELEV. | PIPE IN SIZE | INV. IN | INV. OUT | PIPE OUT SIZE | PIPE OUT TO NODE |
|---|---|---|---|---|---|---|
| CB-226 | 400.65 | 15" | 396.57 (W) | 396.37 (S) | 15" | CB-224 |
| CB-227 | 400.58 | | | 396.75 (E) | 15" | CB-226 |
| CB-252 | 384.38 | 30"<br>24" | 373.28 (W)<br>376.79 (N) | 373.08 (E) | 30" | DMH-251 |
| CB-253 | 386.49 | 24" | 380.95 (N) | 379.20 (S) | 24" | CB-252 |
| CB-254 | 388.52 | 24" | 382.40 (NE) | 382.30 (S) | 24" | CB-253 |
| CB-255 | 390.80 | 24"<br>24" | 384.85 (W)<br>384.38 (N) | 384.28 (SW) | 24" | CB-254 |
| CB-256 | 391.87 | 15"<br>18" | 386.66 (NW)<br>385.41 (N) | 384.91 (S) | 24" | CB-255 |
| CB-257 | 393.39 | | | 387.54 (S) | 18" | CB-256 |
| CB-259 | 391.20 | 15"<br>18" | 386.47 (S)<br>386.47 (W) | 386.27 (NE) | 18" | DCB-258 |
| CB-260 | 391.21 | | | 387.02 (N) | 15" | CB-259 |
| CB-261 | 394.52 | 18" | 389.96 (NW) | 389.86 (E) | 18" | CB-259 |
| CB-262 | 396.88 | 15"<br>15" | 392.45 (S)<br>392.64 (W) | 392.25 (SE) | 18" | CB-261 |
| CB-263 | 396.86 | 15" | 392.83 (S) | 392.73 (N) | 15" | CB-262 |
| CB-264 | 396.56 | | | 393.04 (N) | 15" | CB-263 |
| CB-265 | 397.85 | 15" | 393.42 (S) | 393.22 (E) | 15" | CB-262 |
| CB-266 | 397.84 | | | 393.70 (N) | 15" | CB-265 |
| CB-267 | 384.37 | 24"<br>24" | 373.75 (S)<br>373.70 (NW) | 373.50 (E) | 30" | CB-252 |
| CB-270 | 385.94 | 15"<br>15" | 377.68 (E)<br>377.68 (S) | 377.48 (N) | 15" | TCB-268 |
| CB-271 | 385.88 | 15" | 378.15 (E) | 377.95 (W) | 15" | CB-270 |
| CB-272 | 391.61 | 15" | 378.77 (E) | 378.57 (N) | 15" | CB-270 |

### STRUCTURE DATA TABLE

| STRUCTURE NAME | RIM ELEV. | PIPE IN SIZE | INV. IN | INV. OUT | PIPE OUT SIZE | PIPE OUT TO NODE |
|---|---|---|---|---|---|---|
| CB-273 | 391.63 | 15" | 380.60 (E) | 378.90 (W) | 15" | CB-272 |
| CB-279 | 386.77 | 24"<br>18" | 374.20 (N)<br>378.86 (W) | 374.00 (SE) | 24" | CB-267 |
| CB-280 | 386.78 | 18" | 379.10 (NE) | 374.50 (S) | 24" | CB-279 |
| CB-281 | 385.90 | 15" | 379.67 (N) | 379.47 (SW) | 18" | CB-280 |
| CB-282 | 387.00 | 15" | 380.94 (NW) | 380.74 (S) | 15" | CB-281 |
| CB-283 | 390.51 | 18"<br>18" | 383.07 (W)<br>379.85 (S) | 379.65 (E) | 18" | CB-279 |
| CB-285 | 392.15 | 18" | 385.54 (W) | 385.44 (E) | 18" | CB-283 |
| CB-286 | 393.69 | 15"<br>15" | 387.95 (NE)<br>387.95 (W) | 387.64 (E) | 18" | CB-285 |
| CB-287 | 393.67 | 15" | 388.20 (N) | 388.10 (SW) | 15" | CB-286 |
| CB-288 | 393.66 | | | 389.15 (S) | 15" | CB-287 |
| CB-289 | 396.85 | 15" | 390.35 (NE) | 390.15 (E) | 15" | CB-286 |
| CB-2006 | 396.33 | 15"<br>15" | 391.75 (NE)<br>391.10 (N) | 390.51 (SW) | 15" | CB-289 |
| CB-2010 | 397.89 | | | 391.39 (S) | 15" | CB-2006 |
| DCB-202 | 379.67 | 30" | 363.77 (N) | 363.67 (S) | 30" | DI-201 |
| DCB-221 | 393.48 | 24"<br>24" | 388.29 (W)<br>388.32 (N) | 388.09 (S) | 24" | CB-214 |
| DCB-258 | 390.80 | 18" | 385.65 (SW) | 385.15 (E) | 24" | CB-255 |
| DCB-269 | 384.04 | | | 374.45 (W) | 24" | TCB-268 |
| DI-201 | 376.60 | 30" | 363.22 (N) | 352.00 (S) | 36" | FES-200 |
| DI-228 | 379.24 | 18" | 367.49 (N) | 367.29 (W) | 18" | CB-204 |
| DI-229 | 376.78 | 18" | 368.24 (N) | 368.14 (S) | 18" | DI-228 |

### STRUCTURE DATA TABLE

| STRUCTURE NAME | RIM ELEV. | PIPE IN SIZE | INV. IN | INV. OUT | PIPE OUT SIZE | PIPE OUT TO NODE |
|---|---|---|---|---|---|---|
| DI-230 | 377.50 | 18" | 369.26 (NW) | 369.16 (S) | 18" | DI-229 |
| DI-231 | 376.31 | 18" | 370.50 (NW) | 370.40 (SE) | 18" | DI-230 |
| DI-232 | 381.52 | 18" | 375.50 (NW) | 375.40 (SE) | 18" | DI-231 |
| DI-233 | 386.73 | 15" | 381.75 (N) | 381.50 (SE) | 18" | DI-232 |
| DI-234 | 392.16 | 15" | 385.58 (N) | 385.38 (S) | 15" | DI-233 |
| DI-235 | 398.17 | | | 393.03 (S) | 15" | DI-234 |
| DI-236 | 396.56 | 18"<br>18" | 389.88 (N)<br>391.78 (NW) | 389.68 (E) | 24" | CB-223 |
| DI-237 | 394.75 | 18" | 391.10 (N) | 390.17 (S) | 18" | DI-236 |
| DI-238 | 402.00 | | | 398.50 (SE) | 18" | DI-236 |
| DI-274 | 385.65 | | | 381.00 (W) | 15" | CB-273 |
| DI-275 | 384.04 | | | 380.00 (W) | 15" | CB-271 |
| DI-276 | 393.28 | 15" | 388.68 (W) | 388.48 (SE) | 15" | CB-256 |
| DI-277 | 396.12 | 15" | 391.95 (W) | 391.85 (E) | 15" | DI-276 |
| DI-278 | 398.33 | | | 394.10 (E) | 15" | DI-277 |
| DI-290 | 388.14 | 15" | 383.53 (W) | 383.33 (SE) | 15" | CB-282 |
| DI-291 | 390.96 | 15" | 386.98 (W) | 386.78 (E) | 15" | DI-290 |
| DI-292 | 394.59 | | | 390.75 (E) | 15" | DI-291 |
| DI-293 | 383.89 | 15"<br>18" | 380.60 (W)<br>380.44 (S) | 380.24 (N) | 18" | CB-283 |
| DI-294 | 388.87 | 15" | 385.24 (W) | 385.04 (E) | 15" | DI-293 |
| DI-295 | 392.33 | 15" | 388.08 (W) | 387.98 (E) | 15" | DI-294 |

### STRUCTURE DATA TABLE

| STRUCTURE NAME | RIM ELEV. | PIPE IN SIZE | INV. IN | INV. OUT | PIPE OUT SIZE | PIPE OUT TO NODE |
|---|---|---|---|---|---|---|
| DI-296 | 396.79 | | | 392.54 (E) | 15" | DI-295 |
| DI-297 | 385.49 | 18" | 381.70 (S) | 381.50 (N) | 18" | DI-293 |
| DI-298 | 389.62 | | | 385.12 (N) | 18" | DI-297 |
| DI-299 | 395.73 | 18" | 391.70 (N) | 391.50 (S) | 18" | DI-237 |
| DI-2000 | 401.37 | | | 397.50 (S) | 18" | DI-299 |
| DI-2001 | 377.00 | 15" | 371.80 (N) | 371.60 (S) | 15" | DI-2008 |
| DI-2002 | 382.00 | 15" | 378.20 (N) | 378.00 (S) | 15" | DI-2001 |
| DI-2003 | 384.91 | | | 380.19 (S) | 15" | DI-2002 |
| DI-2004 | 379.50 | 15" | 375.85 (N) | 375.65 (E) | 15" | CB-203 |
| DI-2005 | 385.58 | | | 380.77 (S) | 15" | DI-2004 |
| DI-2007 | 396.61 | | | 392.50 (SW) | 15" | CB-2006 |
| DI-2008 | 374.82 | 15" | 365.88 (N) | 365.68 (S) | 15" | DMH-251 |
| DMH-251 | 371.41 | 30"<br>15" | 362.00 (W)<br>365.00 (N) | 355.00 (E) | 30" | FES-250 |
| FES-200 | | 36" | 351.25 (N) | | | |
| FES-250 | | 30" | 351.50 (W) | | | |
| FES-2000 | | 24" | 345.10 (N) | | | |
| R-2001 | | | | 346.00 (S) | 24" | FES-2000 |
| TCB-222 | 393.48 | 24" | 388.67 (S) | 388.47 (E) | 24" | DCB-221 |
| TCB-268 | 384.00 | 24"<br>15" | 374.20 (E)<br>376.25 (S) | 374.00 (N) | 24" | CB-267 |

### PIPE TABLE

| NAME | SIZE | LENGTH | SLOPE | MATERIAL |
|---|---|---|---|---|
| CB-203 TO CB-204 | 18" | 28.28' | 1.00% | 18" RCP |
| CB-203 TO CB-205 | 24" | 81.43' | 5.12% | 24" RCP |
| CB-203 TO DI-2004 | 15" | 144.54' | 0.56% | 15" RCP |
| CB-204 TO DI-228 | 18" | 137.00' | 1.00% | 18" RCP |
| CB-205 TO CB-206 | 15" | 28.49' | 1.50% | 15" RCP |
| CB-205 TO CB-207 | 24" | 76.88' | 4.33% | 24" RCP |
| CB-207 TO CB-208 | 15" | 27.34' | 0.51% | 15" RCP |
| CB-207 TO CB-209 | 24" | 106.77' | 3.52% | 24" RCP |
| CB-209 TO CB-210 | 15" | 27.00' | 1.12% | 15" RCP |
| CB-209 TO CB-212 | 24" | 95.23' | 2.50% | 24" RCP |
| CB-212 TO CB-213 | 24" | 38.74' | 1.01% | 24" RCP |
| CB-213 TO CB-214 | 24" | 66.06' | 1.39% | 24" RCP |
| CB-214 TO CB-215 | 18" | 35.00' | 1.15% | 18" RCP |
| CB-214 TO DCB-221 | 24" | 139.26' | 0.96% | 24" RCP |
| CB-215 TO CB-216 | 18" | 42.03' | 2.38% | 18" RCP |
| CB-216 TO CB-217 | 15" | 27.01' | 0.64% | 15" RCP |
| CB-216 TO CB-218 | 18" | 66.89' | 1.67% | 18" RCP |
| CB-218 TO CB-219 | 15" | 200.10' | 1.83% | 15" RCP |
| CB-219 TO CB-220 | 15" | 31.34' | 0.54% | 15" RCP |
| CB-223 TO DI-236 | 24" | 104.31' | 0.50% | 24" RCP |

### PIPE TABLE

| NAME | SIZE | LENGTH | SLOPE | MATERIAL |
|---|---|---|---|---|
| CB-224 TO CB-225 | 15" | 35.32' | 0.50% | 15" RCP |
| CB-224 TO CB-226 | 15" | 162.56' | 3.36% | 15" RCP |
| CB-226 TO CB-227 | 15" | 35.07' | 0.50% | 15" RCP |
| CB-252 TO CB-253 | 24" | 112.90' | 2.13% | 24" RCP |
| CB-252 TO CB-267 | 30" | 27.04' | 0.81% | 30" RCP |
| CB-253 TO CB-254 | 24" | 98.11' | 1.38% | 24" RCP |
| CB-254 TO CB-255 | 24" | 121.84' | 1.54% | 24" RCP |
| CB-255 TO CB-256 | 24" | 55.22' | 0.96% | 24" RCP |
| CB-255 TO DCB-258 | 24" | 35.00' | 0.86% | 24" RCP |
| CB-256 TO CB-257 | 18" | 78.86' | 2.70% | 18" RCP |
| CB-256 TO DI-276 | 15" | 69.90' | 2.60% | 15" RCP |
| CB-259 TO CB-260 | 15" | 35.00' | 1.57% | 15" RCP |
| CB-259 TO CB-261 | 18" | 82.20' | 4.12% | 18" RCP |
| CB-261 TO CB-262 | 18" | 75.26' | 3.04% | 18" RCP |
| CB-262 TO CB-263 | 15" | 35.02' | 0.80% | 15" RCP |
| CB-262 TO CB-265 | 15" | 78.98' | 0.73% | 15" RCP |
| CB-263 TO CB-264 | 15" | 26.33' | 0.80% | 15" RCP |
| CB-265 TO CB-266 | 15" | 35.01' | 0.80% | 15" RCP |
| CB-267 TO CB-279 | 24" | 46.29' | 0.65% | 24" RCP |
| CB-267 TO TCB-268 | 24" | 49.30' | 0.51% | 24" RCP |

### PIPE TABLE

| NAME | SIZE | LENGTH | SLOPE | MATERIAL |
|---|---|---|---|---|
| CB-270 TO CB-271 | 15" | 27.04' | 1.00% | 15" RCP |
| CB-270 TO CB-272 | 15" | 178.50' | 0.50% | 15" RCP |
| CB-271 TO DI-275 | 15" | 133.35' | 1.39% | 15" RCP |
| CB-272 TO CB-273 | 15" | 26.99' | 0.50% | 15" RCP |
| CB-273 TO DI-274 | 15" | 79.57' | 0.50% | 15" RCP |
| CB-279 TO CB-280 | 24" | 27.00' | 1.11% | 24" RCP |
| CB-279 TO CB-283 | 18" | 89.27' | 0.88% | 18" RCP |
| CB-280 TO CB-281 | 18" | 44.85' | 0.82% | 18" RCP |
| CB-281 TO CB-282 | 15" | 59.41' | 1.80% | 15" RCP |
| CB-282 TO DI-290 | 15" | 34.75' | 6.88% | 15" RCP |
| CB-283 TO CB-285 | 18" | 69.27' | 3.43% | 18" RCP |
| CB-283 TO DI-293 | 18" | 77.38' | 0.50% | 18" RCP |
| CB-285 TO CB-286 | 18" | 74.03' | 2.84% | 18" RCP |
| CB-286 TO CB-287 | 15" | 27.01' | 0.56% | 15" RCP |
| CB-286 TO CB-289 | 15" | 146.68' | 1.50% | 15" RCP |
| CB-287 TO CB-288 | 15" | 24.63' | 3.86% | 15" RCP |
| CB-289 TO CB-2006 | 15" | 29.46' | 0.53% | 15" RCP |
| CB-2006 TO CB-2010 | 15" | 57.48' | 0.50% | 15" RCP |
| CB-2006 TO DI-2007 | 15" | 21.08' | 3.56% | 15" RCP |
| DCB-202 TO CB-203 | 30" | 78.32' | 0.98% | 30" RCP |

### PIPE TABLE

| NAME | SIZE | LENGTH | SLOPE | MATERIAL |
|---|---|---|---|---|
| DCB-221 TO CB-224 | 24" | 84.89' | 0.80% | 24" RCP |
| DCB-221 TO TCB-222 | 24" | 35.00' | 0.51% | 24" RCP |
| DCB-258 TO CB-259 | 18" | 45.73' | 1.36% | 18" RCP |
| DI-201 TO DCB-202 | 30" | 22.49' | 2.00% | 30" RCP |
| DI-228 TO DI-229 | 18" | 65.22' | 1.00% | 18" RCP |
| DI-229 TO DI-230 | 18" | 91.98' | 1.00% | 18" RCP |
| DI-230 TO DI-231 | 18" | 114.37' | 1.00% | 18" RCP |
| DI-231 TO DI-232 | 18" | 125.29' | 3.91% | 18" RCP |
| DI-232 TO DI-233 | 18" | 107.21' | 5.60% | 18" RCP |
| DI-233 TO DI-234 | 15" | 91.94' | 3.94% | 15" RCP |
| DI-234 TO DI-235 | 15" | 168.36' | 4.43% | 15" RCP |
| DI-236 TO DI-237 | 18" | 54.97' | 0.52% | 18" RCP |
| DI-236 TO DI-238 | 18" | 224.47' | 2.99% | 18" RCP |
| DI-237 TO DI-299 | 18" | 71.63' | 0.55% | 18" RCP |
| DI-276 TO DI-277 | 15" | 93.80' | 3.38% | 15" RCP |
| DI-277 TO DI-278 | 15" | 100.00' | 2.15% | 15" RCP |
| DI-290 TO DI-291 | 15" | 68.73' | 4.73% | 15" RCP |
| DI-291 TO DI-292 | 15" | 88.60' | 4.25% | 15" RCP |
| DI-293 TO DI-294 | 15" | 58.16' | 7.63% | 15" RCP |
| DI-293 TO DI-297 | 18" | 89.62' | 1.18% | 18" RCP |

### PIPE TABLE

| NAME | SIZE | LENGTH | SLOPE | MATERIAL |
|---|---|---|---|---|
| DI-294 TO DI-295 | 15" | 114.04' | 2.40% | 15" RCP |
| DI-295 TO DI-296 | 15" | 140.31' | 3.18% | 15" RCP |
| DI-297 TO DI-298 | 18" | 147.46' | 2.32% | 18" RCP |
| DI-299 TO DI-2000 | 18" | 146.78' | 3.95% | 18" RCP |
| DI-2001 TO DI-2002 | 15" | 116.23' | 5.33% | 15" RCP |
| DI-2002 TO DI-2003 | 15" | 50.45' | 3.94% | 15" RCP |
| DI-2004 TO DI-2005 | 15" | 132.08' | 3.72% | 15" RCP |
| DI-2008 TO DI-2001 | 15" | 99.88' | 5.73% | 15" RCP |
| DMH-251 TO CB-252 | 30" | 146.61' | 7.56% | 30" RCP |
| DMH-251 TO DI-2008 | 15" | 22.22' | 3.07% | 15" RCP |
| FES-200 TO DI-201 | 36" | 58.76' | 1.28% | 36" RCP |
| FES-250 TO DMH-251 | 30" | 94.53' | 3.70% | 30" RCP |
| FES-2000 TO R-2001 | 24" | 78.35' | 1.15% | 24" RCP |
| TCB-222 TO CB-223 | 24" | 57.61' | 0.50% | 24" RCP |
| TCB-268 TO CB-270 | 15" | 120.16' | 1.02% | 15" RCP |
| TCB-268 TO DCB-269 | 24" | 26.97' | 0.92% | 24" RCP |

STORM STRUCTURE NOTES:

- FES = FLARED END SECTION
- DI = GRATED YARD INLET
- CB = CATCH BASIN
- DCB = DOUBLE CATCH BASIN
- TCB = TRIPLE CATCH BASIN
- HW = HEADWALL
- PE = PIPE END

1. ALL YARD INLETS SHALL HAVE 4'X4' INSIDE DIMENSION UNLESS OTHERWISE NOTED.
2. RIM ELEVATION GIVEN FOR DI IS FLOW LINE.
3. RIM ELEVATION GIVEN FOR YI IS FLOW LINE, NOT TOP OF SLAB.
4. RIM ELEVATION GIVEN FOR CB IS TOP OF CURB, NOT FLOW LINE.
5. PIPE LENGTH INCLUDES FES LENGTH.

NOTE: HP STORM (POLYPROPYLENE) PIPE THAT EXCEEDS OR MEETS ASTM F2881 AND AASHTO M330 MAY BE USED IN LIEU OF RCP IN ALL AREAS EXCEPT SCM OUTLET PIPE.

### RIP RAP DISSIPATOR SUMMARY TABLE

| OUTLET | MEDIAN STONE DIAMETER ($D_{50}$) | MINIMUM APRON LENGTH | WIDTH AT PIPE | WIDTH AT END | MAX STONE DIAMETER | APRON THICKNESS |
|---|---|---|---|---|---|---|
| FES100 | 0.60 FT | 19.00 FT | 9.00 FT | 22.00 FT | 0.90 FT | 1.35 FT |
| FES152 | 0.25 FT | 9.00 FT | 4.50 FT | 10.50 FT | 0.38 FT | 0.56 FT |
| FES200 | 0.85 FT | 19.00 FT | 9.00 FT | 22.00 FT | 1.28 FT | 1.91 FT |
| FES250 | 0.66 FT | 12.00 FT | 7.50 FT | 14.50 FT | 0.99 FT | 1.49 FT |
| FES300 | 0.85 FT | 19.00 FT | 9.00 FT | 22.00 FT | 1.28 FT | 1.91 FT |
| FES350 | 0.85 FT | 19.00 FT | 9.00 FT | 22.00 FT | 1.28 FT | 1.91 FT |
| FES400 | 0.55 FT | 11.00 FT | 6.00 FT | 13.00 FT | 0.83 FT | 1.24 FT |
| FES450 | 0.85 FT | 16.00 FT | 7.50 FT | 18.50 FT | 1.28 FT | 1.91 FT |
| FES475 | 0.50 FT | 9.00 FT | 3.75 FT | 10.25 FT | 0.75 FT | 1.13 FT |
| FES1000 | 0.60 FT | 18.00 FT | 6.00 FT | 20.00 FT | 0.90 FT | 1.35 FT |
| FES2000 | 0.50 FT | 20.00 FT | 6.00 FT | 22.00 FT | 0.75 FT | 1.13 FT |
| HW3001 | 0.60 FT | 19.00 FT | 6.00 FT | 24.00 FT | 0.90 FT | 2.81 FT |
| FES3003 | 0.33 FT | 12.00 FT | 9.00 FT | 15.00 FT | 0.50 FT | 0.74 FT |
| HW4000 | 0.40 FT | 12.00 FT | 6.00 FT | 14.00 FT | 0.60 FT | 0.90 FT |
| HW4020 | 0.55 FT | 12.00 FT | 6.00 FT | 14.00 FT | 0.83 FT | 1.24 FT |
| FES4100 | 0.33 FT | 12.00 FT | 3.75 FT | 13.25 FT | 0.50 FT | 0.74 FT |
| CULVERT 1 | 0.83 FT | 40.00 FT | 30.00 FT | 30.00 FT | 1.25 FT | 1.88 FT |
| CULVERT 2 | 0.67 FT | 30.00 FT | 20.00 FT | 15.00 FT | 1.00 FT | 1.50 FT |
| CULVERT 3 | 0.67 FT | 18.80 FT | 12.00 FT | 10.00 FT | 1.00 FT | 1.50 FT |
| CULVERT 4 | 0.83 FT | 40.00 FT | 20.00 FT | 20.00 FT | 1.25 FT | 1.88 FT |
| FESB104 | 0.25 FT | 8.00 FT | 3.75 FT | 9.25 FT | 0.38 FT | 0.56 FT |
| FESB106 | 0.25 FT | 8.00 FT | 3.75 FT | 9.25 FT | 0.38 FT | 0.56 FT |
| FES606 | 0.25 FT | 8.00 FT | 3.75 FT | 9.25 FT | 0.38 FT | 0.56 FT |
| FES609 | 0.25 FT | 8.00 FT | 3.75 FT | 9.25 FT | 0.38 FT | 0.56 FT |
| PE600 | 0.25 FT | 8.00 FT | 3.75 FT | 9.25 FT | 0.38 FT | 0.56 FT |
| PE6000 | 0.25 FT | 8.00 FT | 3.75 FT | 9.25 FT | 0.38 FT | 0.56 FT |
| HW1101 | 0.50 FT | 9.00 FT | 4.50 FT | 10.50 FT | 0.75 FT | 1.13 FT |
| FES1300 | 0.50 FT | 9.00 FT | 4.50 FT | 10.50 FT | 0.75 FT | 1.13 FT |
| FES1400 | 0.50 FT | 12.00 FT | 6.00 FT | 14.00 FT | 0.75 FT | 1.13 FT |
| PE-1500 | 0.40 FT | 12.00 FT | 4.50 FT | 13.50 FT | 0.60 FT | 0.90 FT |

| REV | DATE | DESCRIPTION |
|---|---|---|
| 5 | 03/24/2025 | SUBPHASING, SEWER, & CURB TYPES |
| 4 | 11/04/2024 | AMENITY CENTER REVISIONS |
| 3 | 06/06/2024 | RETAINING WALL LOCATION REVISION |
| 2 | 06/04/2024 | STORM STRUCTURE REVISIONS |
| 1 | 04/08/2024 | EROSION CONTROL REVISION |

DESIGNED BY: DF/CD
DRAWN BY: DF/JWM
REVIEWED BY: DF

BGE
5438 WADE PARK BLVD, SUITE 420
RALEIGH NC 27607
WWW.BGEINC.COM
NC LICENSE #C-4397
©2023

LENNAR CORPORTAION
1100 PERIMETER PARK DRIVE, SUITE 112
MORRISVILLE / NORTH CAROLINA / 27560

PARKER RIDGE
82 SCHOOL STREET
ROLESVILLE / NORTH CAROLINA / 27571

## STORM SEWER TABLE
## (1 OF 2)

DEBRA M. FERM
3/25/2025

Know what's below.
Call before you dig.

FILE NUMBER: 8430-03
DATE: 3/24/2025
C4-7

G:\NCA\Projects\Lennar\8430-03 - Lennar - School Street - Rolesville\03 - DWG\PlanSheets\On-Site\C4-0 - GRAD-PLAN.dwg Layout: C4-7 STORM SEWER TABLE (1 OF 2) Plotted: 3/24/2025 3:35:29 PM

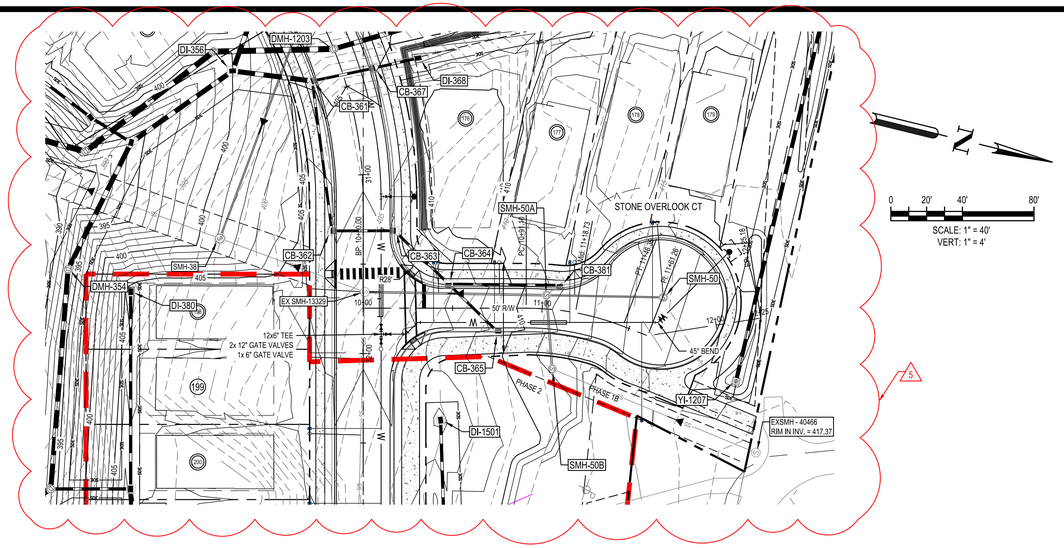


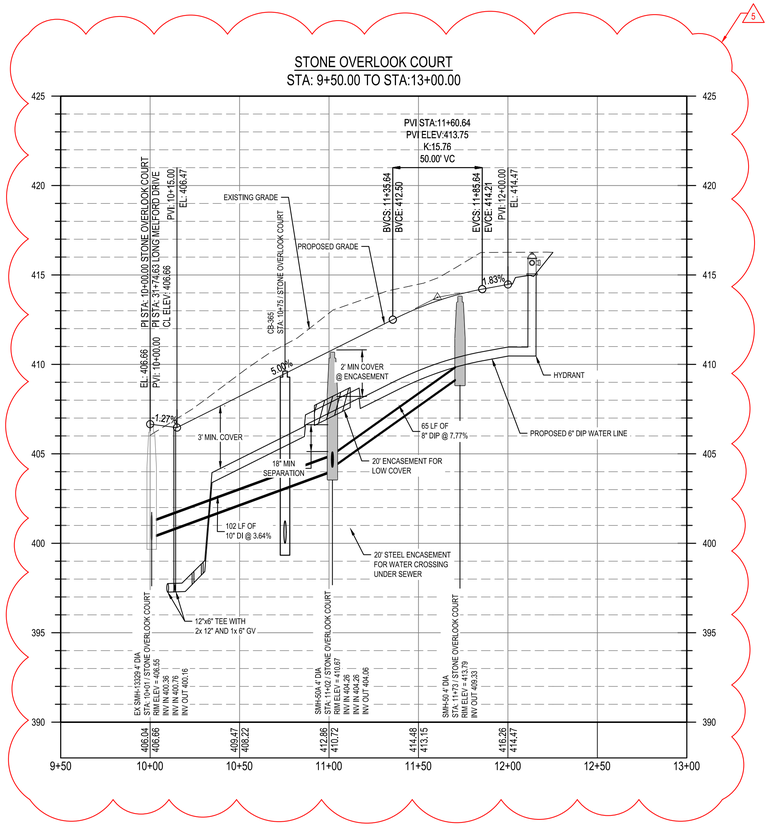


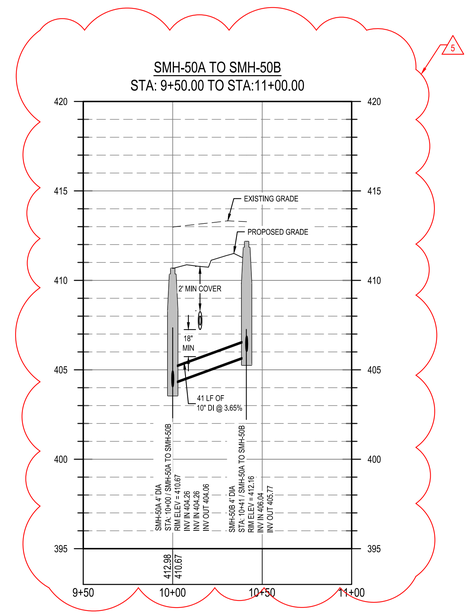


| REV | DATE | DESCRIPTION |
|---|---|---|
| 5 | 03/24/2025 | SUBPHASING, SEWER, & CURB TYPES |
| 4 | 11/04/2024 | AMENITY CENTER REVISIONS |
| 3 | 06/06/2024 | RETAINING WALL LOCATION REVISION |
| 2 | 06/04/2024 | STORM STRUCTURE REVISIONS |
| 1 | 04/08/2024 | EROSION CONTROL REVISION |

DESIGNED BY: DF/CD
DRAWN BY: DF/JWM
REVIEWED BY: DF

BGE
5438 WADE PARK BLVD, SUITE 420
RALEIGH NC 27607
WWW.BGEINC.COM
NC LICENSE #C-4397


LENNAR CORPORTAION
1100 PERIMETER PARK DRIVE, SUITE 112
MORRISVILLE / NORTH CAROLINA / 27560

PARKER RIDGE
82 SCHOOL STREET
ROLESVILLE / NORTH CAROLINA / 27571

# STONE OVERLOOK CT PLAN AND PROFILE

**Public**
**Water Distribution / Extension System**
The City of Raleigh consents to the connection and extension of the City's public water system as shown on this plan. The material and Construction methods used for this project shall conform to the standards and specifications of the City's Public Utilities Handbook.

City of Raleigh
Public Utilities Department Permit # W-4107

Authorization to Construct See digital signature

**Public**
**Sewer Collection / Extension System**
The City of Raleigh consents to the connection and extension of the City's public sewer system as shown on this plan. The material and Construction methods used for this project shall conform to the standards and specifications of the City's Public Utilities Handbook.

City of Raleigh
Public Utilities Department Permit # S-5439

Authorization to Construct See digital signature

CITY OF RALEIGH - PLANS AUTHORIZED FOR CONSTRUCTION

Electronic Approval: This approval is being issued electronically. This approval is valid only upon the signature of a City of Raleigh Review Officer below. The City will retain a copy of the approved plans. Any work authorized by this approval must proceed in accordance with the plans kept on file with the City. This electronic approval may not be edited once issued. Any modification to this approval once issued will invalidate this approval.

City of Raleigh Development Approval _____

Raleigh Water Review Officer _____

811 Know what's below. Call before you dig.

NORTH CAROLINA PROFESSIONAL SEAL 029892 ENGINEER DEBRA M. FERRY
Signed by:
F2BC8B8F1B8B4DF...
3/25/2025

FILE NUMBER: 8430-03
DATE: 3/24/2025
C6-4

G:\NCA\Projects\Lennar\8430-03 - Lennar - School Street - Rolesville\03 - DWG\PlanSheets\On-Site\C6-0 ROAD PLAN AND PROFILE.dwg Layout: C6-4 STREET D PLAN AND PROFILE Plotted: 3/24/2025 3:35:39 PM

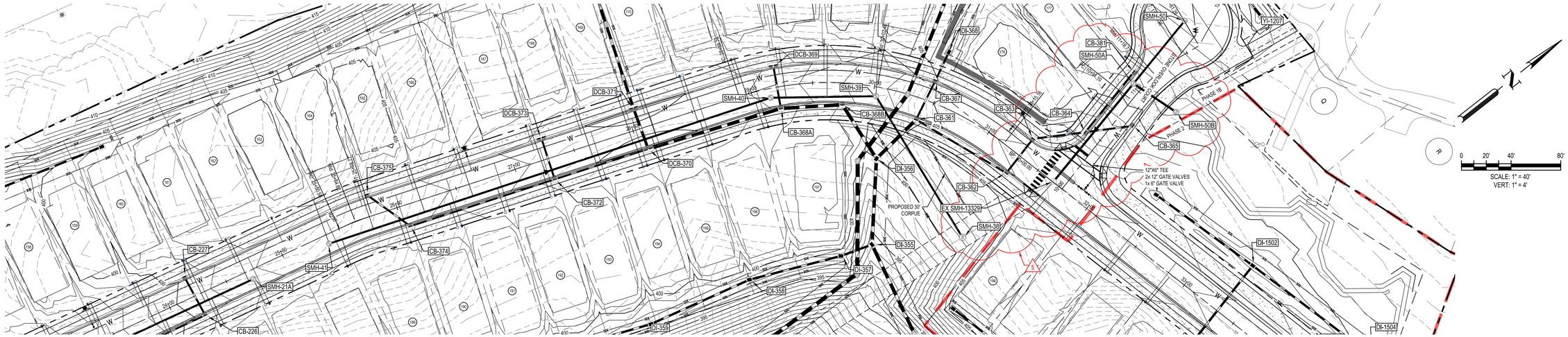


LONG MELFORD DRIVE
STA: 25+00.00 TO STA:32+50.00

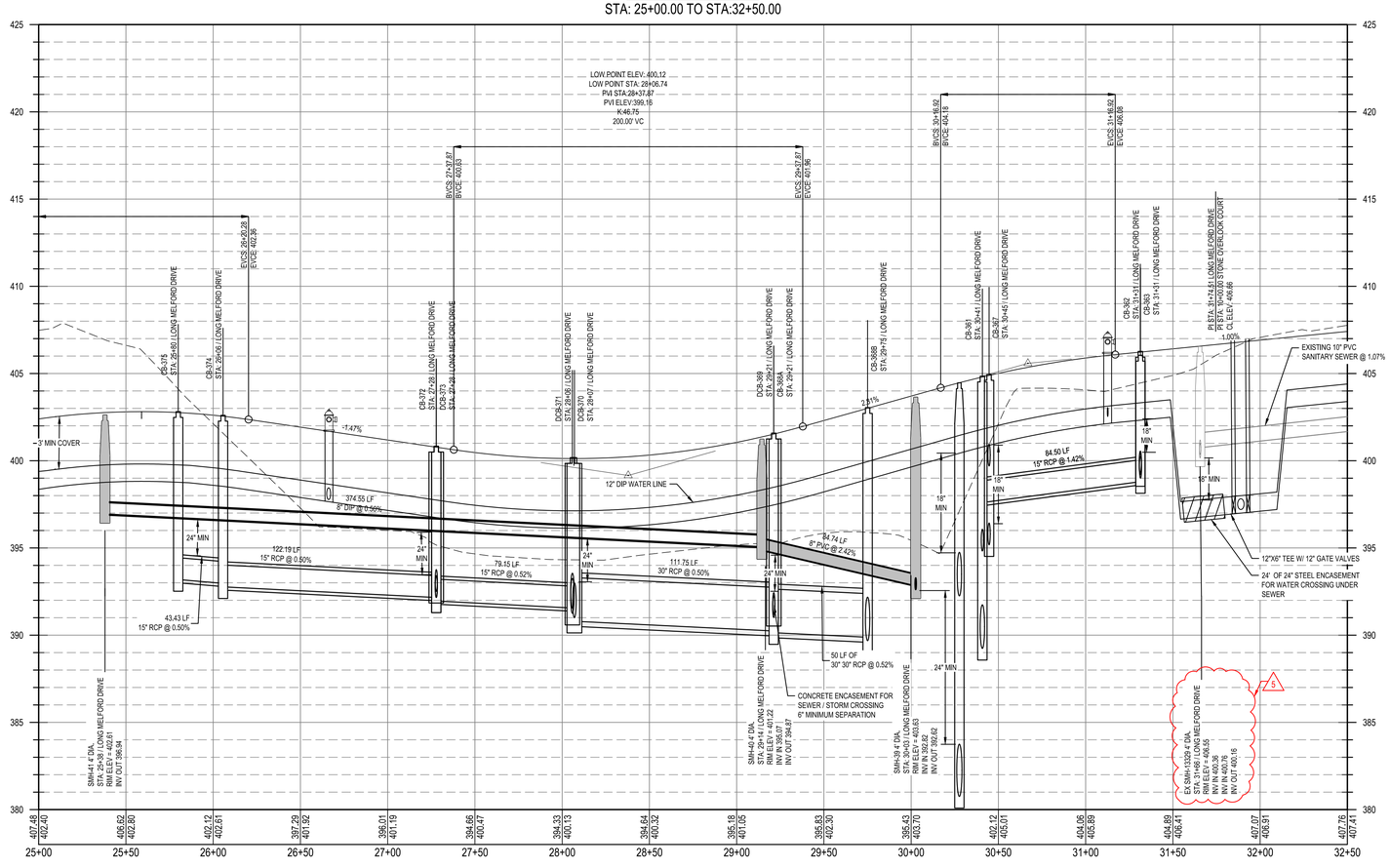


| REV | DATE | DESCRIPTION |
|---|---|---|
| 1 | 03/24/2025 | SUBPHASING, SEWER, & CURB TYPES |
| 1 | 11/04/2024 | AMENITY CENTER REVISIONS |
| 1 | 06/06/2024 | RETAINING WALL LOCATION REVISION |
| 1 | 06/04/2024 | STORM STRUCTURE REVISIONS |
| 1 | 04/08/2024 | EROSION CONTROL REVISION |

DESIGNED BY: DF/CD
DRAWN BY: DF/JWM
REVIEWED BY: DF

BGE
5438 WADE PARK BLVD, SUITE 420
RALEIGH NC 27607
WWW.BGEINC.COM
NC LICENSE #C-4397


LENNAR CORPORTAION
1100 PERIMETER PARK DRIVE, SUITE 112
MORRISVILLE / NORTH CAROLINA / 27560

PARKER RIDGE
82 SCHOOL STREET
ROLESVILLE / NORTH CAROLINA / 27571

# LONG MELFORD DRIVE PLAN AND PROFILE (3 OF 5)

**Public**
**Water Distribution / Extension System**
The City of Raleigh consents to the connection and extension of the City's public water system as shown on this plan. The material and Construction methods used for this project shall conform to the standards and specifications of the City's Public Utilities Handbook.

City of Raleigh
Public Utilities Department Permit # W-4107
Authorization to Construct See digital signature

**Public**
**Sewer Collection / Extension System**
The City of Raleigh consents to the connection and extension of the City's public sewer system as shown on this plan. The material and Construction methods used for this project shall conform to the standards and specifications of the City's Public Utilities Handbook.

City of Raleigh
Public Utilities Department Permit # S-5439
Authorization to Construct See digital signature

CITY OF RALEIGH - PLANS AUTHORIZED FOR CONSTRUCTION

Electronic Approval: This approval is being issued electronically. This approval is valid only upon the signature of a City of Raleigh Review Officer below. The City will retain a copy of the approved plans. Any work authorized by this approval must proceed in accordance with the plans kept on file with the City. This electronic approval may not be edited once issued. Any modification to this approval once issued will invalidate this approval.

City of Raleigh Development Approval _____

Raleigh Water Review Officer _____

811 Know what's below. Call before you dig.

NORTH CAROLINA PROFESSIONAL SEAL 049992 ENGINEER DEBRA M. FUNK
Signed by: DocuSigned by: Debra Funk
3/25/2025

FILE NUMBER: 8430-03
DATE: 3/24/2025
C6-11

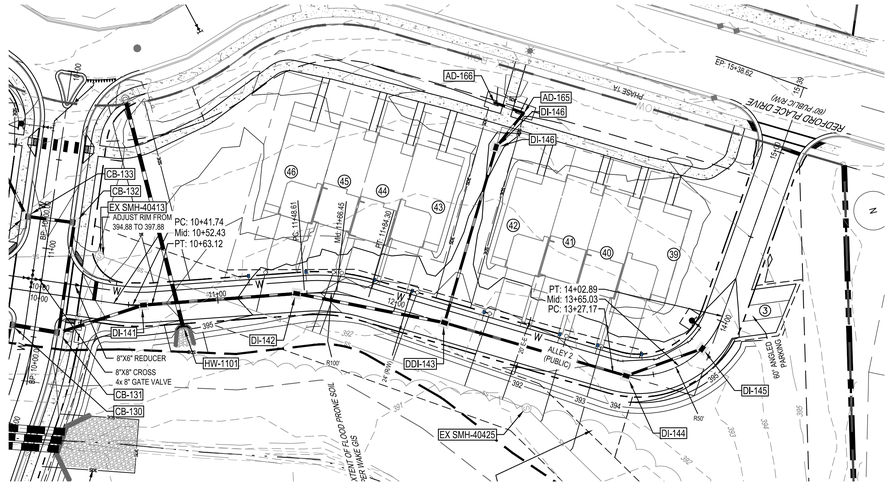


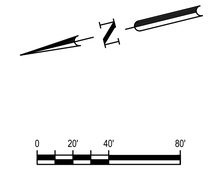


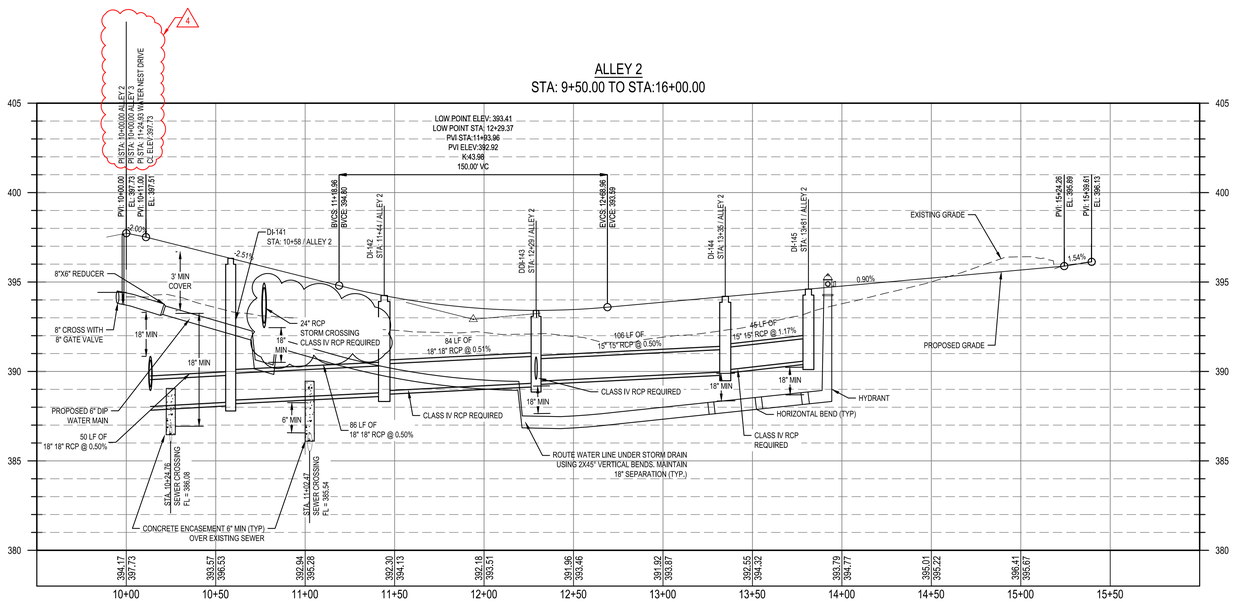


| REV | DATE | DESCRIPTION |
|---|---|---|
| 7 | 03/24/2025 | SUBPHASING, SEWER, & CURB TYPES |
| 6 | 11/04/2024 | AMENITY CENTER REVISIONS |
| 5 | 06/06/2024 | RETAINING WALL LOCATION REVISION |
| 4 | 06/04/2024 | STORM STRUCTURE REVISIONS |
| 3 | 04/08/2024 | EROSION CONTROL REVISION |

DESIGNED BY: DF/CD
DRAWN BY: DF/JWM
REVIEWED BY: DF

BGE
5438 WADE PARK BLVD, SUITE 420
RALEIGH NC 27607
WWW.BGEINC.COM
NC LICENSE #C-4397


LENNAR CORPORTAION
1100 PERIMETER PARK DRIVE, SUITE 112
MORRISVILLE / NORTH CAROLINA / 27560

PARKER RIDGE
82 SCHOOL STREET
ROLESVILLE / NORTH CAROLINA / 27571

# ALLEY 2 PLAN AND PROFILE

NORTH CAROLINA PROFESSIONAL SEAL 029899 ENGINEER DEBRA M. FERRY
Signed by:
F2BC8B8F1B5B4C8...
3/25/2025

FILE NUMBER: 8430-03
DATE: 3/24/2025
C6-15

**Public**
**Water Distribution / Extension System**
The City of Raleigh consents to the connection and extension of the City's public water system as shown on this plan. The material and Construction methods used for this project shall conform to the standards and specifications of the City's Public Utilities Handbook.

City of Raleigh
Public Utilities Department Permit # W-4107
Authorization to Construct See digital signature

**Public**
**Sewer Collection / Extension System**
The City of Raleigh consents to the connection and extension of the City's public sewer system as shown on this plan. The material and Construction methods used for this project shall conform to the standards and specifications of the City's Public Utilities Handbook.

City of Raleigh
Public Utilities Department Permit # S-5439
Authorization to Construct See digital signature

CITY OF RALEIGH - PLANS AUTHORIZED FOR CONSTRUCTION

Electronic Approval: This approval is being issued electronically. This approval is valid only upon the signature of a City of Raleigh Review Officer below. The City will retain a copy of the approved plans. Any work authorized by this approval must proceed in accordance with the plans kept on file with the City. This electronic approval may not be edited once issued. Any modification to this approval once issued will invalidate this approval.

City of Raleigh Development Approval _____

Raleigh Water Review Officer _____

811 Know what's below. Call before you dig.

G:\NCA\Projects\Lennar\8430-03 - Lennar - School Street - Rolesville\03 - DWG\PlanSheets\On-Site\C6-10 ALLEY PLAN AND PROFILE.dwg Layout: C6-15 ALLEY 2 PLAN AND PROFILE Plotted: 3/24/2025 3:36:13 PM

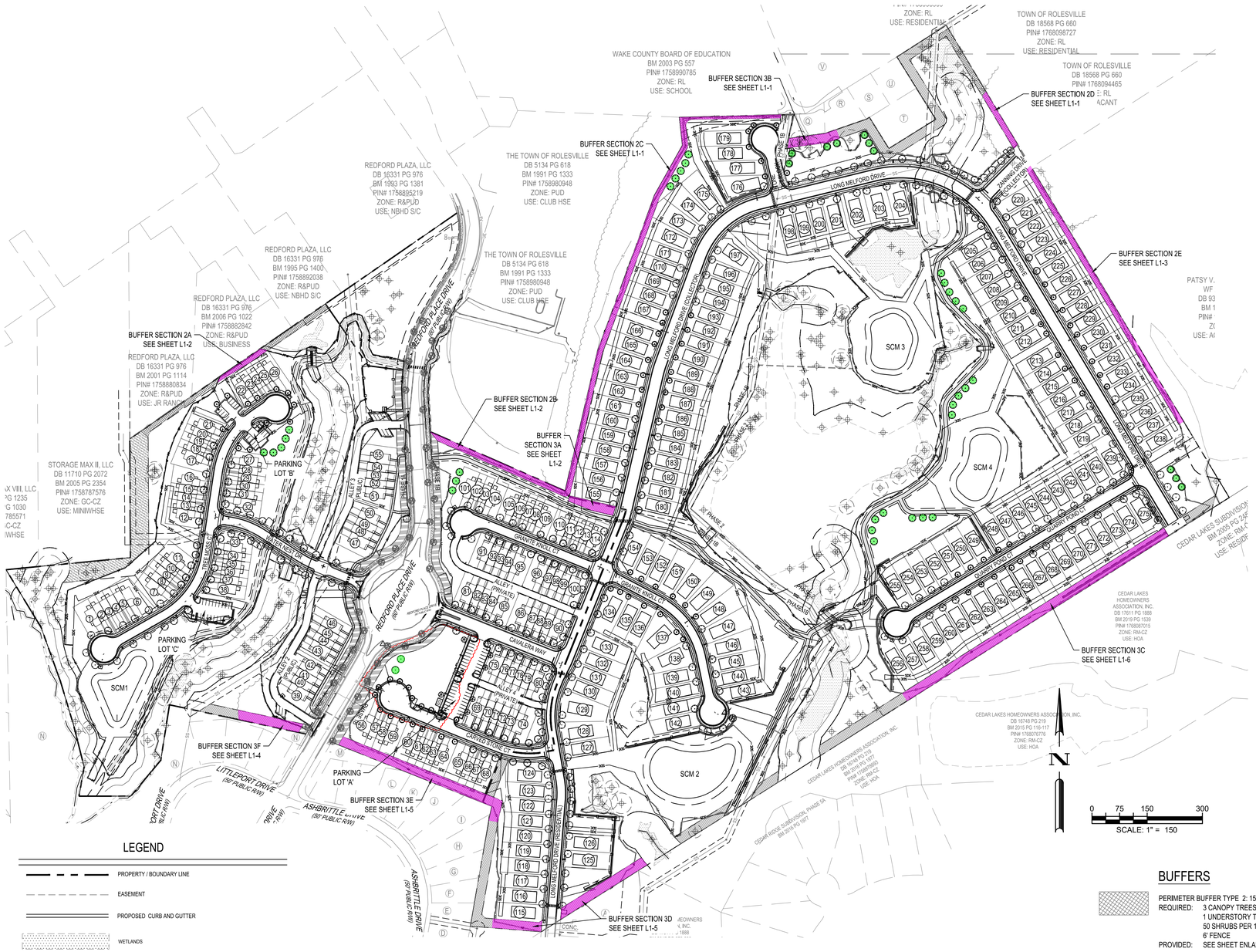


## PLANT SCHEDULE: BUFFERS

| CANOPY TREES | CODE | QTY | BOTANICAL NAME | COMMON NAME | CAL | HT |
|---|---|---|---|---|---|---|
| | AS | 47 | Acer saccharum | Sugar Maple | 2" MIN. | 8` MIN. |
| | QN | 70 | Quercus nuttallii | Nuttall Oak | 2" MIN. | 8` MIN. |
| | UP | 47 | Ulmus parvifolia | Lacebark Elm | 2" MIN. | 8` MIN. |
| **UNDERSTORY TREES** | **CODE** | **QTY** | **BOTANICAL NAME** | **COMMON NAME** | **CAL** | **HT** |
| | CC | 21 | Cercis canadensis | Eastern Redbud | 1" MIN. | 8` MIN. |
| | MS | 47 | Magnolia stellata | Star Magnolia | 1" MIN. | 8` MIN. |
| **SHRUBS** | **CODE** | **QTY** | **BOTANICAL NAME** | **COMMON NAME** | **HT** | **SPR** |
| | AG | 687 | Abelia x grandiflora | Glossy Abelia | 18-24" | 18-24" |
| | IC | 523 | Ilex cornuta 'Burfordii Nana' | Dwarf Burford Holly | 18-24" | 18-24" |
| | IR | 305 | Ilex crenata 'Rotundifolia' | Japanese Holly | 18-24" | 18-24" |
| | IG | 349 | Ilex glabra | Inkberry Holly | 18-24" | 18-24" |
| | IV | 585 | Ilex vomitoria 'Nana' | Dwarf Yaupon | 18-24" | 18-24" |
| | LC | 126 | Loropetalum chinense | Chinese Fringe Flower | 18-24" | 18-24" |

## PLANT SCHEDULE: STREET TREES AND PARKING

| CANOPY TREES | CODE | QTY | BOTANICAL NAME | COMMON NAME | CAL. | HT. |
|---|---|---|---|---|---|---|
| | AS | 95 | Acer saccharum | Sugar Maple | 2" MIN. | 8` MIN. |
| | KP | 6 | Koelreuteria paniculata | Golden Rain Tree | 2" MIN. | 8` MIN. |
| | PS | 92 | Pistacia chinensis | Chinese Pistache | 2" MIN. | 8` MIN. |
| | QF | 10 | Quercus falcata | Southern Red Oak | 2" MIN. | 8` MIN. |
| | QN | 91 | Quercus nuttallii | Nuttall Oak | 2" MIN. | 8` MIN. |
| | UP | 66 | Ulmus parvifolia | Lacebark Elm | 2" MIN. | 8` MIN. |
| | ZS | 66 | Zelkova serrata | Sawleaf Zelkova | 2" MIN. | 8` MIN. |
| **SHRUBS** | **CODE** | **QTY** | **BOTANICAL NAME** | **COMMON NAME** | **HT.** | **SPR.** |
| | AG | 42 | Abelia x grandiflora | Glossy Abelia | 18-24" | 18-24" |
| | IV | 46 | Ilex vomitoria 'Nana' | Dwarf Yaupon | 18-24" | 18-24" |

## REPLACEMENT TREES

| CANOPY TREES | CODE | QTY | BOTANICAL NAME | COMMON NAME | CAL | HT |
|---|---|---|---|---|---|---|
| | AS | 32 | Acer saccharum | Sugar Maple | 2" MIN. | 8' MIN. |
| | QF | 10 | Quercus falcata | Southern Red Oak | 2" MIN. | 8' MIN. |

## LEGEND

- PROPERTY / BOUNDARY LINE
- EASEMENT
- PROPOSED CURB AND GUTTER
- WETLANDS
- 50' STREAM BUFFER
- TREE PROTECTION FENCE
- LIMIT OF CONSTRUCTION
- BUFFER SECTION TO BE PLANTED*
- EXISTING STREET TREE
- PRESERVED TREE
- PRESERVED TREE CLOSE TO CONSTRUCTION LIMIT (CRITICAL ROOT ZONE SHOWN)

* BUFFER SECTION LACKING EXISTING VEGETATION OR DISTURBED BY GRADING. SEE ENLARGEMENT SHEETS FOR PLANT QUANTITIES.

TYPICAL BUFFER SECTION: TYPE 2
SCALE: 1:30

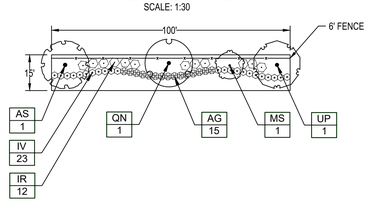


TYPICAL BUFFER SECTION: TYPE 3
SCALE:1:30

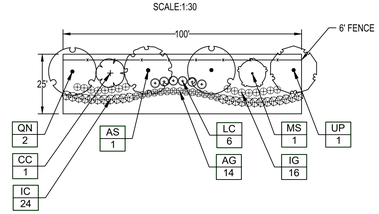


## BUFFERS

PERIMETER BUFFER TYPE 2: 15' WIDTH, 3,338 TOTAL LF
REQUIRED: 3 CANOPY TREES PER 100 LF
1 UNDERSTORY TREE PER 100 LF
50 SHRUBS PER 100 LF
6' FENCE
PROVIDED: SEE SHEET ENLARGEMENTS

PERIMETER BUFFER TYPE 3: 25' WIDTH, 3,884 TOTAL LF
REQUIRED: 4 CANOPY TREES PER 100 LF
2 UNDERSTORY TREES PER 100 LF
60 SHRUBS PER 100 LF
6' WALL (6' FENCE PER ZONING)
PROVIDED: SEE SHEET ENLARGEMENTS

PERIMETER BUFFER TYPE 4: 50' WIDTH, 517 TOTAL LF
REQUIRED: 8 CANOPY TREES PER 100 LF
4 UNDERSTORY TREES PER 100 LF
CONTINUOUS HEDGE
3' WALL + 5' BERM (6' FENCE PER ZONING)
PROVIDED: EX. VEGETATION TO SATISFY REQUIREMENT

STREET BUFFER - REDFORD PLACE DRIVE (COLLECTOR):
20' WIDTH, 2,037 LF OF FRONTAGE
REQUIRED: 1 STREET TREE EVERY 50 LF OF FRONTAGE
2,037 LF OF FRONTAGE / 50' = 41 TREES
PROVIDED: 41 EXISTING CANOPY TREES TO COUNT TOWARD REQUIREMENT

## STREET TREES

REQUIRED: 1 STREET TREE EVERY 40 LF OF FRONTAGE

CARVED STONE CT
REQUIRED: 918 LF OF FRONTAGE / 40' = 23 TREES
PROVIDED: 28 TREES

CALAVERA WAY
REQUIRED: 554 LF OF FRONTAGE / 40' = 14 TREES
PROVIDED: 14 TREES

GRANITE KNOLL CT
REQUIRED: 1,722 LF OF FRONTAGE / 40' = 43 TREES
PROVIDED: 46 TREES

STONE OVERLOOK
REQUIRED: 292 LF OF FRONTAGE / 40' = 7 TREES
PROVIDED: 7 TREES

WATER NEST DR
REQUIRED: 704 LF OF FRONTAGE / 40' = 18 TREES
PROVIDED: 18 TREES

TREE MOSS CT
REQUIRED: 1,660 LF OF FRONTAGE / 40' = 41 TREES
PROVIDED: 48 TREES

QUARRY POND CT
REQUIRED: 1,528 LF OF FRONTAGE / 40' = 38 TREES
PROVIDED: 39 TREES

ZANNING DRIVE
REQUIRED: 264 LF OF FRONTAGE / 40' = 7 TREES
PROVIDED: 7 TREES

LONG MELFORD DRIVE
REQUIRED: 6,800 LF OF FRONTAGE / 40' = 170 TREES
PROVIDED: 171 TREES

## PARKING AREAS

PARKING LOT 'A'
REQUIRED: PERIMETER SHRUBS 3' O.C. ROADWAY SCREENING
PROVIDED: 42 SHRUBS

REQUIRED: 1 TREE / 150 SF OF PARKING ISLANDS
1,669 SF PARKING ISLANDS = 11 TREES
PROVIDED: 12 TREES

PARKING LOT 'B'
REQUIRED: PERIMETER SHRUBS 3' O.C. ROADWAY SCREENING
PROVIDED: 25 SHRUBS

PARKING LOT 'C'
REQUIRED: PERIMETER SHRUBS 3' O.C. ROADWAY SCREENING
PROVIDED: 21 SHRUBS

Know what's below. Call before you dig.

| REV | DATE | DESCRIPTION |
|---|---|---|
| 1 | 11/04/2024 | AMENITY CENTER REVISIONS |
| 2 | 06/05/2024 | RETAINING WALL LOCATION REVISION |
| 3 | 06/04/2024 | STORM STRUCTURE REVISIONS |
| 4 | 04/08/2024 | EROSION CONTROL REVISION |

DESIGNED BY: MC/RZ
DRAWN BY: MC
REVIEWED BY: RZ

BGE
5438 WADE PARK BLVD, SUITE 420
RALEIGH NC 27607
WWW.BGEINC.COM
NC LICENSE #C-4397


LENNAR CORPORATION
1100 PERIMETER PARK DRIVE, SUITE 112
MORRISVILLE / NORTH CAROLINA / 27560

PARKER RIDGE
82 SCHOOL STREET
ROLESVILLE / NORTH CAROLINA / 27571

# OVERALL LANDSCAPE PLAN

NORTH CAROLINA LANDSCAPE ARCHITECT
Signed by: Yvonne G. Mauldin
LICENSE NUMBER 1383
YVONNE G. MAULDIN
3/25/2025

FILE NUMBER: 8430-03
DATE: 3/11/2025
L1-0