VICINITY MAP
1" = 1,000'

SITE CONSTRUCTION PLANS FOR

PINE GLO

V1 - SDP-24-05

1- Add project number / submittal type to Cover Sheet

4 - Add Site data table including: Property Identification Numbers (PIN) for all properties, Zoning (Current and Proposed if a Rezoning), Watershed, River Basin, Current Use(s), Proposed Use(s), Current Impervious, Proposed Impervious, Parking Data per use, Tree Coverage Data, Building Height, and Building Square Footage(s) and/or residential density and unit data per housing type

414 S MAIN ST ST
ROLESVILLE, NC 27571
PIN: 1758-79-7437

2 - Please include township & county

SHEET	TITLE
C-1	COVER
C-2	CALCULATIONS
C-3	EXISTING CONDITIONS & DEMOLITION PLAN
C-4	SITE PLAN
C-5	UTILITY PLAN
C-6	GRADING & DRAINAGE PLAN
C-7	SCM DETAILS
C-8	EROSION & SEDIMENT CONTROL PLAN - PHASE 1
C-9	EROSION & SEDIMENT CONTROL PLAN - PHASE 2
C-10	LANDSCAPING PLAN
C-11	LIGHTING PLAN
C-12	SITE DETAILS
C-13	STORM DRAINAGE DETAILS
C-14	EROSION & SEDIMENT CONTROL DETAILS
C-15	EROSION & SEDIMENT CONTROL DETAILS
C-16	WATER & SEWER DETAILS
C-17	NCG01 SELF-INSPECTION, RECORDKEEPING & REPORTING
C-18	NCG01 GROUND STABILIZATION & MATERIAL HANDLING

DEVELOPER:

OPTIMAL GLO LLC
CONTACT: ROBERT SHAAR
1021 FORESTVILLE RD, STE 200
WAKE FOREST, NC 27587
610.295.3699
SHAAR@MYOPTIMALEQUITY.COM

ENGINEER OF RECORD:

FLM ENGINEERING, INC
CONTACT: JON FRAZIER, PE
PO BOX 91727
RALEIGH, NC 27675
919.610.1051
JFRAZIER@FLMENGINEERING.COM

3 - Add owner and applicant contact information

CALL 48 HOURS BEFORE YOU DIG
North Carolina 811 www.nc811.org
NORTH CAROLINA
ONE-CALL CENTER
1-800-632-4949

CITY OF RALEIGH - PLANS AUTHORIZED FOR CONSTRUCTION

ELECTRONIC APPROVAL: THIS APPROVAL IS BEING ISSUED ELECTRONICALLY. THIS APPROVAL IS VALID ONLY UPON THE SIGNATURE OF A CITY OF RALEIGH REVIEW OFFICER BELOW. THE CITY WILL RETAIN A COPY OF THE APPROVED PLANS. ANY WORK AUTHORIZED BY THIS APPROVAL MUST PROCEED IN ACCORDANCE WITH THE PLANS KEPT ON FILE WITH THE CITY. THIS ELECTRONIC APPROVAL MAY NOT BE EDITED ONCE ISSUED. ANY MODIFICATION TO THIS APPROVAL ONCE ISSUED WILL INVALIDATE THIS APPROVAL.

CITY OF RALEIGH DEVELOPMENT APPROVAL _____
RALEIGH WATER REVIEW OFFICER

ALL CONSTRUCTION SHALL BE IN ACCORDANCE WITH ALL TOWN OF ROLESVILLE, CITY OF RALEIGH AND WAKE COUNTY STANDARDS AND SPECIFICATIONS

© 2024 THIS DRAWING SHALL NOT BE REPRODUCED IN WHOLE OR IN PART WITHOUT WRITTEN PERMISSION OF FLM ENGINEERING, INC.

FLM ENGINEERING
POST OFFICE BOX 91727
RALEIGH, NORTH CAROLINA 27675
PHONE: 919.610.1051
FIRM NC LICENSE NUMBER C-4222

NORTH CAROLINA PROFESSIONAL SEAL 033775 ENGINEER JONATHAN D. FRAZIER 6/3/24

REVISION HISTORY

REV #	DESCRIPTION	DATE	BY

ORIGINAL PLAN SIZE: 24" X 36"

SCALE ADJUSTMENT
THIS BAR IS 1 INCH IN LENGTH ON ORIGINAL DRAWING
0 1"
IF IT IS NOT 1 INCH ON THIS SHEET, ADJUST YOUR SCALE ACCORDINGLY

SITE CONSTRUCTION PLANS
PINE GLO
414 S MAIN ST
ROLESVILLE, NC 27571

OPTIMAL GLO LLC

DATE:	06-03-2024
SCALE:	AS SHOWN
DESIGNED BY:	FLM
APPROVED BY:	FLM
PROJECT NO.:	24028

COVER

C-1

PIPE TABLE

STRUCTURE NUMBER			Cc	I	A	A	Tc	Q	Q									
FROM	TO	NO. OF BOXES	RUNOFF COEFFICIENT	10-YEAR INTENSITY (in/hr)	DRAINAGE AREA (sf)	DRAINAGE AREA (ac)	TIME OF CONCENTRATION (min)	FLOW (cfs)	TOTAL FLOW (cfs)	SLOPE (ft/ft)	Dtheo (in)	SIZE (in)	Vfull (ft/sec)	PIPE LENGTH (ft)*	UPPER INVERT (ft)	LOWER INVERT (ft)	TOP ELEVATION (ft)	PIPE MATERIAL
YI-1	EX. JB	-	0.90	7.19	9500	0.22	5.0	1.41	1.41	0.0068	9.1	12	4.1	176.00	415.40	414.20	418.30	HDPE
JB-2	JB-4	-	0.90	7.19	22200	0.51	5.0	3.30	3.30	0.0050	13.3	15	4.0	260.00	414.50	413.20	419.50	HDPE
YI-3	JB-4	-	0.90	7.19	10100	0.23	5.0	1.50	4.80	0.0142	12.5	15	6.8	109.00	414.75	413.20	418.10	HDPE
JB-4	FES-5	-	0.90	7.19	0	0.00	5.0	0.00	4.80	0.0500	9.9	18	14.4	4.00	413.20	413.00	419.50	HDPE
YI-6	YI-8	-	0.90	7.19	9800	0.22	5.0	1.46	1.46	0.0059	9.5	12	3.8	85.00	415.00	414.50	418.20	HDPE
YI-7	YI-8	-	0.90	7.19	4000	0.09	5.0	0.59	0.59	0.0063	6.7	12	3.9	63.00	414.90	414.50	418.30	HDPE
YI-8	YI-9	-	0.90	7.19	6200	0.14	5.0	0.92	2.97	0.0056	12.5	15	4.2	72.00	414.50	414.10	418.30	HDPE
YI-9	YI-13	-	0.90	7.19	6000	0.14	5.0	0.89	3.86	0.0058	13.7	15	4.3	69.00	414.10	413.70	418.30	HDPE
YI-10	YI-11	-	0.90	7.19	3900	0.09	5.0	0.58	0.58	0.0050	6.9	12	3.5	40.00	414.60	414.40	418.30	HDPE
YI-11	YI-12	-	0.90	7.19	4000	0.09	5.0	0.59	1.17	0.0054	8.9	12	3.6	74.00	414.40	414.00	418.30	HDPE
YI-12	YI-13	-	0.90	7.19	6800	0.16	5.0	1.01	2.18	0.0050	11.4	12	3.5	60.00	414.00	413.70	418.10	HDPE
YI-13	YI-16	-	0.90	7.19	5200	0.12	5.0	0.77	6.82	0.0053	17.2	18	4.7	75.00	413.70	413.30	418.30	HDPE
JB-14	YI-15	-	0.90	7.19	28300	0.65	5.0	4.20	4.20	0.0097	12.8	15	5.6	269.00	416.40	413.80	419.70	HDPE
YI-15	YI-16	-	0.90	7.19	8800	0.20	5.0	1.31	5.51	0.0055	15.8	18	4.8	91.00	413.80	413.30	418.00	HDPE
YI-16	FES-17	-	0.90	7.19	6600	0.15	5.0	0.98	13.31	0.0065	21.3	24	6.3	46.00	413.30	413.00	418.20	HDPE

*LENGTHS ARE OF THE PIPE ONLY, CENTER OF STRUCTURE TO CENTER OF STRUCTURE, AND DO NOT INCLUDE FLARED END SECTIONS OR OTHER END TREATMENT

5 - Minimum pipe size must be 15"; Min. crossline pipe size shall be 18". Please revise.

SKIMMER SEDIMENT BASIN DESIGN CALCULATIONS

SKIMMER SEDIMENT BASIN DESIGN									SKIMMER SEDIMENT BASIN EFFICIENCY							
BASIN NUMBER	BASIN TYPE	DRAINAGE AREA (ac)	DISTURBED AREA (ac)	REQUIRED VOLUME 1800 CF/AC (cf)	DEPTH* (ft)	WIDTH (ft)	LENGTH (ft)	VOLUME PROVIDED (cf)	WEIGHTED RUNOFF COEFFICIENT	10-YEAR RAINFALL INTENSITY (in/hr)	FLOW Q (cfs)	REQUIRED SURFACE AREA 435 SF/CFS (sf)	AREA PROVIDED (sf)	SIZE (in)	ORIFICE RADIUS (in)	ORIFICE DIAMETER (in)
SK-1***	PERMANENT RISER BASIN	2.13	1.98	3834	3	-	-	20504	0.50	7.19	7.66	2489	8719	1.5	0.7	1.3

*DEPTH FROM BOTTOM TO RISER TOP

**SKIMMER SIZED PER SIZING CALCULATOR AT WWW.FAIRCLOTHSKIMMER.COM FOR REQUIRED VOLUME AT A DRAWDOWN RATE OF 72 HOURS

***SK-1 VOLUME AND SURFACE AREA PER HYDROCAD MODEL DUE TO IRREGULAR SHAPE

TEMPORARY DIVERSION DITCH DESIGN

DITCH NUMBER	RUNOFF COEFFICIENT	10-YEAR RAINFALL INTENSITY (in/hr)	DRAINAGE AREA (acres)	Q (cfs)	LENGTH (ft)	CHANNEL SECTION	BOTTOM WIDTH (ft)	LEFT SIDE SLOPE, Z:1 (ft)	RIGHT SIDE SLOPE, Z:1 (ft)	CHANNEL DEPTH (ft)	CHANNEL SLOPE (ft/ft)	NORMAL DEPTH (ft)	FREEBOARD (ft)	SHEAR STRESS (lb/ft2)	VELOCITY (fps)	MANNING'S n VALUE	TEMPORARY LINER
TD-1	0.50	7.19	0.98	3.52	200.00	TRIANGULAR	-	2.00	2.00	1.50	0.005	0.98	0.52	0.31	1.83	0.033	STRAW W/ NET

BOUYANCY CALCULATIONS

STORMWATER WETLAND

STRUCTURE DIMENSIONS

TOP OF OUTLET STRUCTURE =	416.00	ft
BOTTOM =	413.00	ft
HEIGHT OF RISER =	3.00	ft
ASSUME 6" WALL THICKNESS		

WEIGHT CALCULATIONS

Vbase =	0' x 0' x 0' =	0.00	cf
Wbase =	0 cf x 150 lb/cf =	0.00	lbs
Vsump =	4' x 4' x 2' =	32.00	cf
Wsump =	32 cf x 150 lb/cf =	4800.00	lbs
Wstruc =	[(5 x 5 x 3)-(4 x 4 x 2.5)] x 150 lb/cf =	5250.00	lbs
TOTAL WEIGHT =		10050.00	lbs

BOUYANCY CALCULATIONS

Bbase =	0 cf x 62.4 lb/cf =	0.00	lbs
Bstruc =	(5 x 5 x 3) x 62.4 lb/cf	4680.00	lbs
TOTAL BOUYANCY =		4680.00	lbs
FACTOR OF SAFETY =		**2.15**	

CALL 48 HOURS BEFORE YOU DIG

NORTH CAROLINA ONE-CALL CENTER
1-800-632-4949

CITY OF RALEIGH - PLANS AUTHORIZED FOR CONSTRUCTION

ELECTRONIC APPROVAL: THIS APPROVAL IS BEING ISSUED ELECTRONICALLY. THIS APPROVAL IS VALID ONLY UPON THE SIGNATURE OF A CITY OF RALEIGH REVIEW OFFICER BELOW. THE CITY WILL RETAIN A COPY OF THE APPROVED PLANS. ANY WORK AUTHORIZED BY THIS APPROVAL MUST PROCEED IN ACCORDANCE WITH THE PLANS KEPT ON FILE WITH THE CITY. THIS ELECTRONIC APPROVAL MAY NOT BE EDITED ONCE ISSUED. ANY MODIFICATION TO THIS APPROVAL ONCE ISSUED WILL INVALIDATE THIS APPROVAL.

CITY OF RALEIGH DEVELOPMENT APPROVAL _____
RALEIGH WATER REVIEW OFFICER

ALL CONSTRUCTION SHALL BE IN ACCORDANCE WITH ALL TOWN OF ROLESVILLE, CITY OF RALEIGH AND WAKE COUNTY STANDARDS AND SPECIFICATIONS

© 2024 THIS DRAWING SHALL NOT BE REPRODUCED IN WHOLE OR IN PART WITHOUT WRITTEN PERMISSION OF FLM ENGINEERING, INC.

FLM ENGINEERING
POST OFFICE BOX 91727
RALEIGH, NORTH CAROLINA 27675
PHONE: 919.610.1051
FIRM NC LICENSE NUMBER C-4222

NORTH CAROLINA PROFESSIONAL SEAL 033775 ENGINEER JONATHAN D. FRAZIER 6/3/24

REVISION HISTORY

REV #	DESCRIPTION	DATE	BY

ORIGINAL PLAN SIZE: 24" X 36"

SCALE ADJUSTMENT
THIS BAR IS 1 INCH IN LENGTH ON ORIGINAL DRAWING
0 1"
IF IT IS NOT 1 INCH ON THIS SHEET, ADJUST YOUR SCALE ACCORDINGLY

SITE CONSTRUCTION PLANS

PINE GLO
414 S MAIN ST
ROLESVILLE, NC 27571

OPTIMAL GLO LLC

DATE:	06-03-2024
SCALE:	AS SHOWN
DESIGNED BY:	FLM
APPROVED BY:	FLM
PROJECT NO.:	24028

CALCULATIONS

C-2

NOTES

1. BOUNDARY AND TOPOGRAPHIC SURVEY BY CMP PROFESSIONAL LAND SURVEYORS.
2. THERE ARE NO FLOOD PRONE AREAS PRESENT PER FEMA FIRM PANEL NO. 3720175800K, EFFECTIVE 07/19/22.
3. THE UTILITIES SHOWN ARE NOT GUARANTEED TO BE A REPRESENTATION OF ALL UTILITIES WITHIN THE PROJECT EXTENT.
4. THE CONTRACTOR SHALL CALL THE NORTH CAROLINA ONE-CALL-CENTER AT LEAST 48 HOURS PRIOR TO BEGINNING WORK.
5. THE CONTRACTOR SHALL VERIFY DEPTHS AND LOCATIONS OF ALL UTILITIES PRIOR TO BEGINNING WORK AND SHALL USE CARE WHEN OPERATING AROUND EXISTING UTILITIES.
6. THE CONTRACTOR SHALL BE FINANCIALLY RESPONSIBLE FOR THE REPAIR OF ANY EXISTING UTILITIES DAMAGED DURING CONSTRUCTION.

LEGEND

- EX. PROPERTY LINE
- EX. RIGHT-OF-WAY
- EX. ADJACENT OWNERS
- EX. EASEMENT
- EX. CHAIN LINK FENCE
- EX. WOOD FENCE
- EX. COMMUNICATIONS LINE
- EX. OVERHEAD ELECTRIC LINE
- EX. WATER LINE
- EX. SANITARY SEWER
- EX. STORM SEWER
- EX. MAJOR CONTOUR (5')
- EX. MINOR CONTOUR (1')

6 - Include existing site data - Property size (ac/sf), PIN, owner, zoning, use

7 - Dimension existing building; add square footage and # of stories

8 - Existing contours must extend 100' past property limits

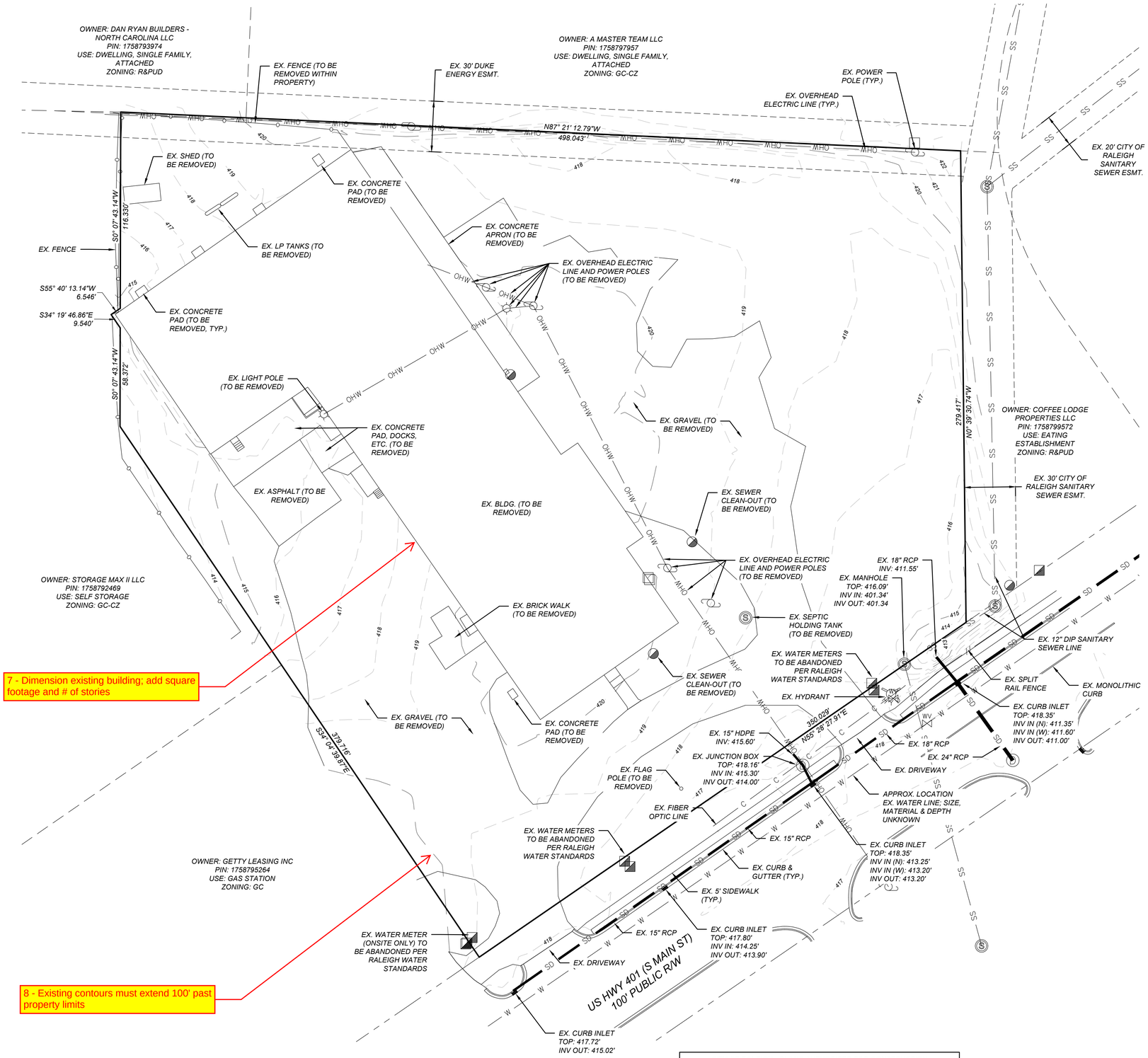

CALL 48 HOURS BEFORE YOU DIG

North Carolina 811 www.nc811.org

NORTH CAROLINA ONE-CALL CENTER 1-800-632-4949

CITY OF RALEIGH - PLANS AUTHORIZED FOR CONSTRUCTION

ELECTRONIC APPROVAL: THIS APPROVAL IS BEING ISSUED ELECTRONICALLY. THIS APPROVAL IS VALID ONLY UPON THE SIGNATURE OF A CITY OF RALEIGH REVIEW OFFICER BELOW. THE CITY WILL RETAIN A COPY OF THE APPROVED PLANS. ANY WORK AUTHORIZED BY THIS APPROVAL MUST PROCEED IN ACCORDANCE WITH THE PLANS KEPT ON FILE WITH THE CITY. THIS ELECTRONIC APPROVAL MAY NOT BE EDITED ONCE ISSUED. ANY MODIFICATION TO THIS APPROVAL ONCE ISSUED WILL INVALIDATE THIS APPROVAL.

CITY OF RALEIGH DEVELOPMENT APPROVAL _____

RALEIGH WATER REVIEW OFFICER

ALL CONSTRUCTION SHALL BE IN ACCORDANCE WITH ALL TOWN OF ROLESVILLE, CITY OF RALEIGH AND WAKE COUNTY STANDARDS AND SPECIFICATIONS

© 2024 THIS DRAWING SHALL NOT BE REPRODUCED IN WHOLE OR IN PART WITHOUT WRITTEN PERMISSION OF FLM ENGINEERING, INC.

FLM ENGINEERING

POST OFFICE BOX 91727
RALEIGH, NORTH CAROLINA 27675
PHONE: 919.610.1051
FIRM NC LICENSE NUMBER C-4222

NORTH CAROLINA PROFESSIONAL SEAL 033775 ENGINEER JONATHAN D. FRAZIER 6/3/24

REVISION HISTORY

REV #	DESCRIPTION	DATE	BY

ORIGINAL PLAN SIZE: 24" X 36"

30 15 0 30
SCALE: 1 INCH = 30 FEET

SCALE ADJUSTMENT
THIS BAR IS 1 INCH IN LENGTH ON ORIGINAL DRAWING
0 1"
IF IT IS NOT 1 INCH ON THIS SHEET, ADJUST YOUR SCALE ACCORDINGLY

SITE CONSTRUCTION PLANS

PINE GLO
414 S MAIN ST
ROLESVILLE, NC 27571

OPTIMAL GLO LLC

DATE:	06-03-2024
SCALE:	AS SHOWN
DESIGNED BY:	FLM
APPROVED BY:	FLM
PROJECT NO.:	24028

EXISTING CONDITIONS & DEMOLITION PLAN

C-3

SHEET 3 OF 18

SUMMARY INFORMATION

DEVELOPMENT NAME: PINE GLO

STREET ADDRESS: 414 S MAIN ST

PIN NUMBER: 1758-79-7437

TOTAL AREA: 4.19 AC

EXISTING USE: INDUSTRIAL
PROPOSED USE: COMMERCIAL (EATING ESTABLISHMENT; RECREATION, INDOOR; AND RETAIL SALES AND SERVICES, NEIGHBORHOOD)

JURISDICTION: TOWN OF ROLESVILLE
ZONING DISTRICT: GI (GENERAL INDUSTRIAL)

PROPOSED BUILDING AREA: 64,450 SF
PROPOSED EATING ESTABLISHMENT AREA: 8,560 SF
PROPOSED RECREATION, INDOOR AREA: 49,190 SF
PROPOSED RETAIL SALES AND SERVICES, NEIGHBORHOOD AREA: 1,600 SF

GI MAX. BUILDING HEIGHT: 35' WITHOUT SPRINKLERS, 60' WITH SPRINKLERS
PROPOSED BUILDING HEIGHT: 40' (SPRINKLERED)

GI BUILDING SETBACKS:
FRONT: 30'
SIDE: 15'
REAR: 35'
CORNER: 25'

PARKING CALCULATIONS:
REQUIRED EATING ESTABLISHMENT SPACES: MIN. 2.5/1,000 SF, MAX. 10/10,000 SF = MIN. 21, MAX. 85
REQUIRED RECREATION, INDOOR SPACES: MIN. 4/1,000 SF, 10/1,000 SF = MIN. 197, MAX. 492
REQUIRED RETAIL SALES AND SERVICES SPACES: MIN. 2.5/1,000 SF, MAX. 7.5/10,000 SF = MIN. 4, MAX. 16
TOTAL REQUIRED SPACES: MIN. 222, MAX. 593
TOTAL PROPOSED SPACES: 165 (6 ADA, VAN ACCESSIBLE); REFER TO ALTERNATIVE PARKING PLAN (APP)

LOADING SPACE CALCULATIONS:
REQUIRED SPACES: 1/20,000 SF = 3
PROPOSED SPACES: 3

BICYCLE PARKING CALCULATIONS:
REQUIRED SPACES: 1/5,000 SF = 13
PROPOSED SPACES: 14 (7 INVERTED 'U' RACKS)

REQUIRED OPEN SPACE: 9,132 SF (5%); 4,566 SF ACTIVE (50% OF REQUIRED OPEN SPACE)
PROPOSED OPEN SPACE: 9,532 SF (5.2%); 4,966 SF ACTIVE

EXISTING IMPERVIOUS SURFACE AREA: 101,590 SF, 2.33 AC (55.6%)
PROPOSED IMPERVIOUS SURFACE AREA: 121,650 SF, 2.80 AC (66.8%)

NOTES

1. PROPOSED ADA STALLS AND AISLES SHALL HAVE SLOPES NO STEEPER THAN 1:48 (2%) IN ALL DIRECTIONS.
2. PROPOSED ACCESSIBLE ROUTES SHALL HAVE RUNNING SLOPES NO STEEPER THAN 1:20 (5%) AND CROSS SLOPES NO STEEPER THAN 1:48 (2%).
3. ACCESSIBLE PARKING SPACES ARE THOSE DENOTED BY ADA PARKING SIGNS AND ACCESSIBLE AISLES ARE REPRESENTED BY CROSS HATCHING.
4. DIMENSIONS SHOWN ARE TO FACE OF CURB.
5. RADII ARE 3' UNLESS OTHERWISE NOTED.

LEGEND

- EX. PROPERTY LINE
- EX. RIGHT-OF-WAY
- EX. ADJACENT OWNERS
- EX. EASEMENT
- EX. CHAIN LINK FENCE
- EX. WOOD FENCE
- PROP. SETBACK LINE
- PROP. EASEMENT

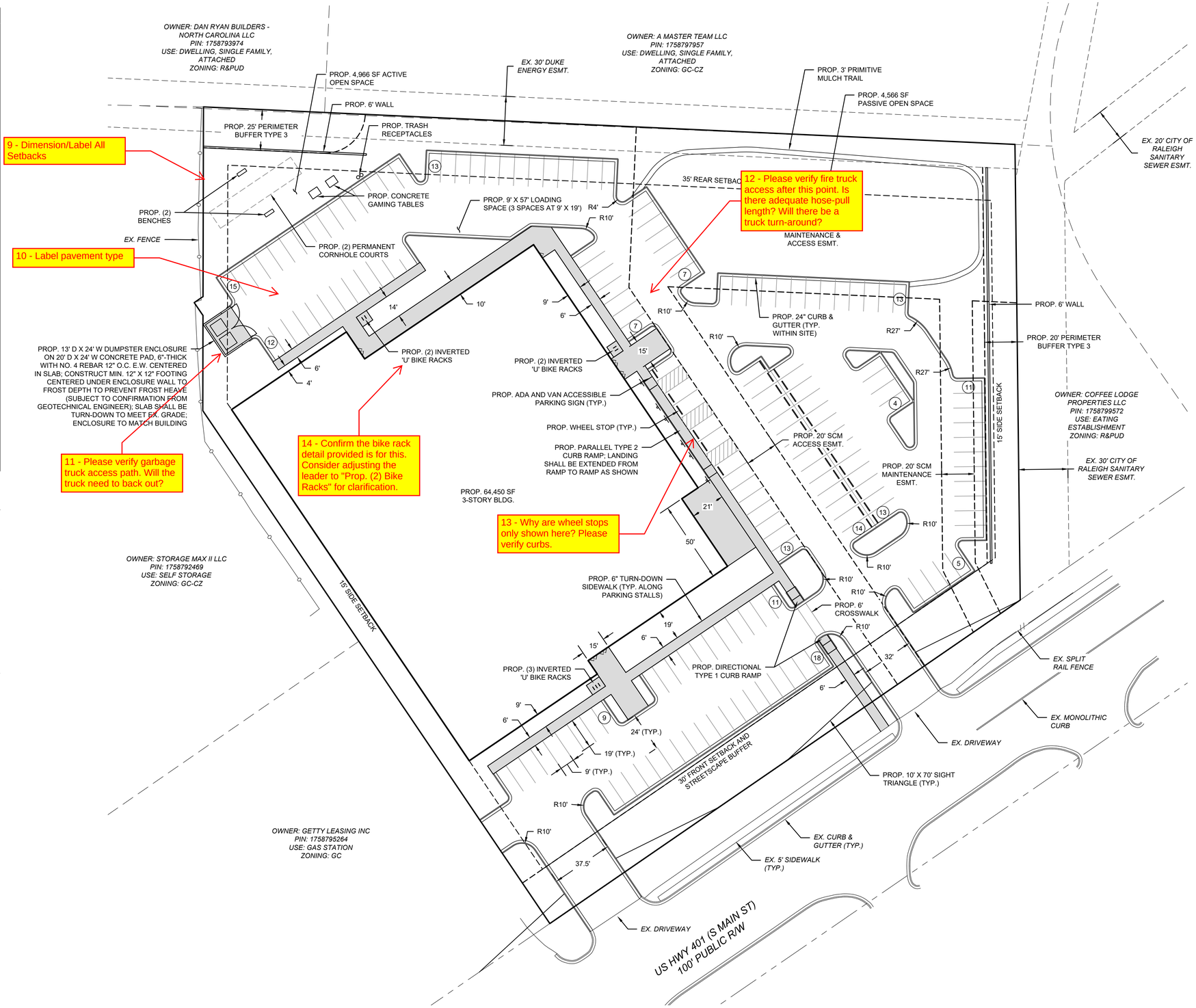

CALL 48 HOURS BEFORE YOU DIG

NORTH CAROLINA ONE-CALL CENTER
1-800-632-4949

CITY OF RALEIGH - PLANS AUTHORIZED FOR CONSTRUCTION

ELECTRONIC APPROVAL: THIS APPROVAL IS BEING ISSUED ELECTRONICALLY. THIS APPROVAL IS VALID ONLY UPON THE SIGNATURE OF A CITY OF RALEIGH REVIEW OFFICER BELOW. THE CITY WILL RETAIN A COPY OF THE APPROVED PLANS. ANY WORK AUTHORIZED BY THIS APPROVAL MUST PROCEED IN ACCORDANCE WITH THE PLANS KEPT ON FILE WITH THE CITY. THIS ELECTRONIC APPROVAL MAY NOT BE EDITED ONCE ISSUED. ANY MODIFICATION TO THIS APPROVAL ONCE ISSUED WILL INVALIDATE THIS APPROVAL.

CITY OF RALEIGH DEVELOPMENT APPROVAL _____
RALEIGH WATER REVIEW OFFICER

ALL CONSTRUCTION SHALL BE IN ACCORDANCE WITH ALL TOWN OF ROLESVILLE, CITY OF RALEIGH AND WAKE COUNTY STANDARDS AND SPECIFICATIONS

© 2024 THIS DRAWING SHALL NOT BE REPRODUCED IN WHOLE OR IN PART WITHOUT WRITTEN PERMISSION OF FLM ENGINEERING, INC.

FLM ENGINEERING
POST OFFICE BOX 91727
RALEIGH, NORTH CAROLINA 27675
PHONE: 919.610.1051
FIRM NC LICENSE NUMBER C-4222

NORTH CAROLINA PROFESSIONAL SEAL 033775 ENGINEER JONATHAN D. FRAZIER 6/3/24

REVISION HISTORY

REV #	DESCRIPTION	DATE	BY

ORIGINAL PLAN SIZE: 24" X 36"

30 15 0 30
SCALE: 1 INCH = 30 FEET

N

SCALE ADJUSTMENT
THIS BAR IS 1 INCH IN LENGTH ON ORIGINAL DRAWING
0 1"
IF IT IS NOT 1 INCH ON THIS SHEET, ADJUST YOUR SCALE ACCORDINGLY

SITE CONSTRUCTION PLANS

PINE GLO
414 S MAIN ST
ROLESVILLE, NC 27571

OPTIMAL GLO LLC

DATE:	06-03-2024
SCALE:	AS SHOWN
DESIGNED BY:	FLM
APPROVED BY:	FLM
PROJECT NO.:	24028

SITE PLAN

C-4

SHEET 4 OF 18

CITY OF RALEIGH STANDARD UTILITY NOTES (AS APPLICABLE)

1. ALL MATERIALS & CONSTRUCTION METHODS SHALL BE IN ACCORDANCE WITH CITY OF RALEIGH DESIGN STANDARDS, DETAILS & SPECIFICATIONS (REFERENCE: CORPUD HANDBOOK, CURRENT EDITION).

2. UTILITY SEPARATION REQUIREMENTS:
   A. A DISTANCE OF 100' SHALL BE MAINTAINED BETWEEN SANITARY SEWER & ANY PRIVATE OR PUBLIC WATER SUPPLY SOURCE SUCH AS AN IMPOUNDED RESERVOIR USED AS A SOURCE OF DRINKING WATER. IF ADEQUATE LATERAL SEPARATION CANNOT BE ACHIEVED, FERROUS SANITARY SEWER PIPE SHALL BE SPECIFIED & INSTALLED TO WATERLINE SPECIFICATIONS. HOWEVER, THE MINIMUM SEPARATION SHALL NOT BE LESS THAN 25' FROM A PRIVATE WELL OR 50' FROM A PUBLICWELL.
   B. WHEN INSTALLING WATER &/OR SEWER MAINS, THE HORIZONTAL SEPARATION BETWEEN UTILITIES SHALL BE 10'. IF THIS SEPARATION CANNOT BE MAINTAINED DUE TO EXISTING CONDITIONS, THE VARIATION ALLOWED IS THE WATER MAIN IN A SEPARATE TRENCH WITH THE ELEVATION OF THE WATER MAIN AT LEAST 18" ABOVE THE TOP OF THE SEWER & MUST BE APPROVED BY THE PUBLIC UTILITIES DIRECTOR. ALL DISTANCES ARE MEASURED FROM OUTSIDE DIAMETER TO OUTSIDE DIAMETER.
   C. WHERE IT ISIMPOSSIBLE TO OBTAIN PROPERSEPARATION, OR ANYTIME A SANITARY SEWER PASSES OVER A WATERMAIN, DIP MATERIALS OR STEEL ENCASEMENT EXTENDED 10' ON EACH SIDE OF CROSSING MUST BE SPECIFIED & INSTALLED TO WATERLINE SPECIFICATIONS.
   D. 5.0' MINIMUM HORIZONTAL SEPARATION IS REQUIRED BETWEEN ALL SANITARY SEWER & STORM SEWER FACILITIES, UNLESS DIP MATERIAL IS SPECIFIED FOR SANITARY SEWER
   E. MAINTAIN 18" MIN. VERTICAL SEPARATION AT ALL WATERMAIN & RCP STORM DRAIN CROSSINGS; MAINTAIN 18" MIN. VERTICAL SEPARATION AT ALL SANITARY SEWER & RCP STORM DRAIN CROSSINGS. WHERE ADEQUATE SEPARATIONS CANNOT BE ACHIEVED, SPECIFY DIP MATERIALS & A CONCRETE CRADLE HAVING 6" MIN. CLEARANCE (PER CORPUD DETAILS W- 41 & S-49).
   F. ALL OTHER UNDERGROUND UTILITIES SHALL CROSS WATER & SEWER FACILITIES WITH 18" MIN. VERTICAL SEPARATION REQUIRED.

3. ANY NECESSARY FIELD REVISIONS ARE SUBJECT TO REVIEW & APPROVAL OF AN AMENDED PLAN &/OR PROFILE BY THE CITY OF RALEIGH PUBLIC UTILITIES DEPARTMENT PRIOR TO CONSTRUCTION.

4. DEVELOPER SHALL PROVIDE 30 DAYS ADVANCE WRITTEN NOTICE TO OWNER FOR ANY WORK REQUIRED WITHIN AN EXISTING CITY OF RALEIGH UTILITY EASEMENT TRAVERSING PRIVATE PROPERTY.

5. CONTRACTOR SHALL MAINTAIN CONTINUOUS WATER & SEWER SERVICE TO EXISTING RESIDENCES & BUSINESSES THROUGHOUT CONSTRUCTION OF PROJECT. ANY NECESSARY SERVICE INTERRUPTIONS SHALL BE PRECEDED BY A 24-HOUR ADVANCE NOTICE TO THE CITY OF RALEIGH PUBLIC UTILITIES DEPARTMENT.

6. SEWER BYPASS PUMPING – A BYPASS PLAN SEALED BY AN NC PROFESSIONAL ENGINEER SHALL BE PROVIDED TO RALEIGH WATER PRIOR TO PUMPING OPERATIONS FOR APPROVAL. THE OPERATIONS AND EQUIPMENT SHALL COMPLY WITH THE PUBLIC UTILITIES HANDBOOK.

7. 3.0' MINIMUM COVER IS REQUIRED ON ALL WATER MAINS & SEWER FORCE MAINS. 4.0' MINIMUM COVER IS REQUIRED ON ALL REUSE MAINS.

8. IT IS THE DEVELOPER'S RESPONSIBILITY TO ABANDON OR REMOVE EXISTING WATER & SEWER SERVICES NOT BEING USED IN REDEVELOPMENT OF A SITE UNLESS OTHERWISE DIRECTED BY THE CITY OF RALEIGH PUBLIC UTILITIES DEPARTMENT. THIS INCLUDES ABANDONING TAP AT MAIN & REMOVAL OF SERVICE FROM ROW OR EASEMENT PER CORPUD HANDBOOK PROCEDURE.

9. INSTALL ¾" COPPER* WATER SERVICES WITH METERS LOCATED AT ROW OR WITHIN A 2'X2' WATERLINE EASEMENT IMMEDIATELY ADJACENT. NOTE: IT IS THE APPLICANT'S RESPONSIBILITY TO PROPERLY SIZE THE WATER SERVICE FOR EACH CONNECTION TO PROVIDE ADEQUATE FLOW & PRESSURE.

10. INSTALL 4" PVC* SEWER SERVICES @ 1.0% MINIMUM GRADE WITH CLEANOUTS LOCATED AT ROW OR EASEMENT LINE & SPACED EVERY 75 LINEAR FEET MAXIMUM.

11. PRESSURE REDUCING VALVES ARE REQUIRED ON ALL WATER SERVICES EXCEEDING 80 PSI; BACKWATER VALVES ARE REQUIRED ON ALL SANITARY SEWER SERVICES HAVING BUILDING DRAINS LOWER THAN 1.0' ABOVE THE NEXT UPSTREAMMANHOLE.

12. ALL ENVIRONMENTAL PERMITS APPLICABLE TO THE PROJECT MUST BE OBTAINED FROM NCDWQ, USACE &/OR FEMA FOR ANY RIPARIAN BUFFER, WETLAND &/OR FLOODPLAIN IMPACTS (RESPECTIVELY) PRIOR TO CONSTRUCTION.

13. NCDOT / RAILROAD ENCROACHMENT AGREEMENTS ARE REQUIRED FOR ANY UTILITY WORK (INCLUDING MAIN EXTENSIONS & SERVICE TAPS) WITHIN STATE OR RAILROAD ROW PRIOR TO CONSTRUCTION.

14. GREASE INTERCEPTOR / OIL WATER SEPARATOR SIZING CALCULATIONS & INSTALLATION SPECIFICATIONS SHALL BE APPROVED BY THE RW FOG PROGRAM COORDINATOR PRIOR TO ISSUANCE OF A UC AND/OR BUILDING PERMIT. CONTACT (919) 996-4516 OR FOG@RALEIGHNC.GOV FOR MORE INFORMATION.

15. CROSS-CONNECTION CONTROL PROTECTION DEVICES ARE REQUIRED BASED ON THE DEGREE OF HEALTH HAZARD INVOLVED AS LISTED IN APPENDIX B OF THE RULES GOVERNING PUBLIC WATER SYSTEMS IN NORTH CAROLINA.

16. THE DEVICES SHALL MEET THE AMERICAN SOCIETY OF SANITARY ENGINEERING (SAAE) STANDARDS AND BE ON THE UNIVERSITY OF SOUTHERN CALIFORNIA APPROVAL LIST.

17. THE DEVICE AND INSTALLATION SHALL MEE THE GUIDELINES OF APPENDIX A – GUIDELINES AND REQUIREMENTS FOR THE CROSS CONNECTION PROGRAM IN RALEIGH'S SERVICE AREA.

18. THE DEVICES SHALL BE INSTALLED AND TESTED (BOTH, INITIAL AND PERIODIC TESTING THEREAFTER) IN ACCORDANCE WITH THE MANUFACTURER'S RECOMMENDATIONS OR THE LOCAL CROSS CONNECTION CONTROL PROGRAM, WHICHEVER IS MORE STRINGENT. CONTACT CROSS.CONNECTION@RALEIGHNC.GOV FOR MORE INFORMATION.

19. NOTICE FOR PROJECTS THAT INVOLVE AN OVERSIZED MAIN OR URBAN MAIN REPLACEMENT. ANY CITY REIMBURSEMENT GREATER THAN $250,000.00 MUST UNDERGO THE PUBLIC BIDDING PROCESS.

NOTES

1. ALL WATER AND SANITARY SEWER CONSTRUCTION SHALL BE IN ACCORDANCE WITH CITY OF RALEIGH STANDARDS AND SPECIFICATIONS.
2. THE UTILITIES SHOWN ARE NOT GUARANTEED TO BE A REPRESENTATION OF ALL UTILITIES WITHIN THE PROJECT EXTENT.
3. THE CONTRACTOR SHALL CALL THE NORTH CAROLINA ONE-CALL-CENTER AT LEAST 48 HOURS PRIOR TO BEGINNING WORK.
4. THE CONTRACTOR SHALL VERIFY DEPTHS AND LOCATIONS OF ALL UTILITIES PRIOR TO BEGINNING WORK AND SHALL USE CARE WHEN OPERATING AROUND EXISTING UTILITIES.
5. THE CONTRACTOR SHALL BE FINANCIALLY RESPONSIBLE FOR THE REPAIR OF ANY EXISTING UTILITIES DAMAGED DURING CONSTRUCTION.

LEGEND

- EX. PROPERTY LINE
- EX. RIGHT-OF-WAY
- EX. ADJACENT OWNERS
- EX. EASEMENT
- EX. CHAIN LINK FENCE
- EX. WOOD FENCE
- EX. COMMUNICATIONS LINE
- EX. OVERHEAD ELECTRIC LINE
- EX. WATER LINE
- EX. SANITARY SEWER
- EX. STORM SEWER
- PROP. SETBACK LINE
- PROP. EASEMENT
- PROP. WATER LINE
- PROP. SANITARY SEWER
- PROP. STORM SEWER

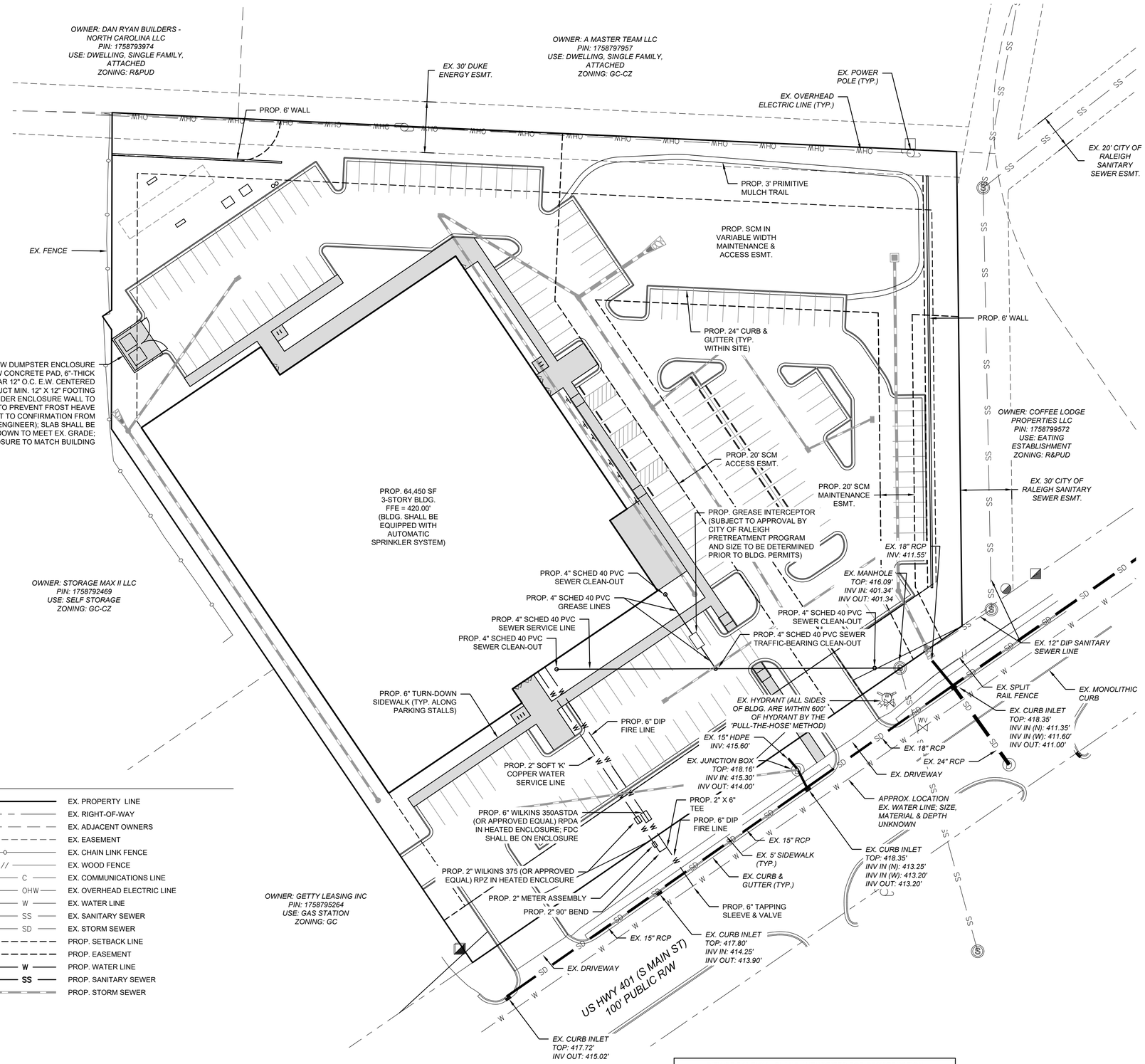

CITY OF RALEIGH - PLANS AUTHORIZED FOR CONSTRUCTION

ELECTRONIC APPROVAL: THIS APPROVAL IS BEING ISSUED ELECTRONICALLY. THIS APPROVAL IS VALID ONLY UPON THE SIGNATURE OF A CITY OF RALEIGH REVIEW OFFICER BELOW. THE CITY WILL RETAIN A COPY OF THE APPROVED PLANS. ANY WORK AUTHORIZED BY THIS APPROVAL MUST PROCEED IN ACCORDANCE WITH THE PLANS KEPT ON FILE WITH THE CITY. THIS ELECTRONIC APPROVAL MAY NOT BE EDITED ONCE ISSUED. ANY MODIFICATION TO THIS APPROVAL ONCE ISSUED WILL INVALIDATE THIS APPROVAL.

CITY OF RALEIGH DEVELOPMENT APPROVAL _____

RALEIGH WATER REVIEW OFFICER

ALL CONSTRUCTION SHALL BE IN ACCORDANCE WITH ALL TOWN OF ROLESVILLE, CITY OF RALEIGH AND WAKE COUNTY STANDARDS AND SPECIFICATIONS

CALL 48 HOURS BEFORE YOU DIG

North Carolina 811 www.nc811.org

NORTH CAROLINA ONE-CALL CENTER 1-800-632-4949

© 2024 THIS DRAWING SHALL NOT BE REPRODUCED IN WHOLE OR IN PART WITHOUT WRITTEN PERMISSION OF FLM ENGINEERING, INC.

FLM ENGINEERING
POST OFFICE BOX 91727
RALEIGH, NORTH CAROLINA 27675
PHONE: 919.610.1051
FIRM NC LICENSE NUMBER C-4222

NORTH CAROLINA PROFESSIONAL SEAL 033775 ENGINEER JONATHAN D. FRAZIER 6/3/24

REVISION HISTORY

REV #	DESCRIPTION	DATE	BY

ORIGINAL PLAN SIZE: 24" X 36"

30 15 0 30
SCALE: 1 INCH = 30 FEET

N

SCALE ADJUSTMENT
THIS BAR IS 1 INCH IN LENGTH ON ORIGINAL DRAWING
0 1"
IF IT IS NOT 1 INCH ON THIS SHEET, ADJUST YOUR SCALE ACCORDINGLY

SITE CONSTRUCTION PLANS

PINE GLO
414 S MAIN ST
ROLESVILLE, NC 27571

OPTIMAL GLO LLC

DATE:	06-03-2024
SCALE:	AS SHOWN
DESIGNED BY:	FLM
APPROVED BY:	FLM
PROJECT NO.:	24028

UTILITY PLAN

C-5

SHEET 5 OF 18

NOTES

1. PROPOSED CONTOURS REPRESENT FINISHED GRADE ELEVATIONS.
2. CUT AND FILL SLOPES ARE 3H:1V UNLESS OTHERWISE NOTED.
3. PROPOSED ADA STALLS AND AISLES SHALL HAVE SLOPES NO STEEPER THAN 1:48 (2%) IN ALL DIRECTIONS.
4. PROPOSED ACCESSIBLE ROUTES SHALL HAVE RUNNING SLOPES NO STEEPER THAN 1:20 (5%) AND CROSS SLOPES NO STEEPER THAN 1:48 (2%).
5. REFER TO SHEET C-2 FOR STORM DRAINAGE CALCULATIONS.
6. ROOF DRAINS SHALL BE COORDINATED WITH BUILDING PLANS AND SHALL BE CONNECTED TO DOWNSPOUTS WITH APPROPRIATE BEND FITTINGS AND CONNECTED TO THE STORM DRAINAGE SYSTEM VIA CURRENT NC PLUMBING CODE, CHAPTER 11 "STORM DRAINAGE" COMPLIANT FIXTURES, MATERIALS, ETC.
7. THE UTILITIES SHOWN ARE NOT GUARANTEED TO BE A REPRESENTATION OF ALL UTILITIES WITHIN THE PROJECT EXTENT.
8. THE CONTRACTOR SHALL CALL THE NORTH CAROLINA ONE-CALL-CENTER AT LEAST 48 HOURS PRIOR TO BEGINNING WORK.
9. THE CONTRACTOR SHALL VERIFY DEPTHS AND LOCATIONS OF ALL UTILITIES PRIOR TO BEGINNING WORK AND SHALL USE CARE WHEN OPERATING AROUND EXISTING UTILITIES.
10. THE CONTRACTOR SHALL BE FINANCIALLY RESPONSIBLE FOR THE REPAIR OF ANY EXISTING UTILITIES DAMAGED DURING CONSTRUCTION.

KEY

FES = FLARED END SECTION

JB = JUNCTION BOX

YI = YARD INLET

TC = TOP OF CURB

BC = BOTTOM OF CURB

LEGEND

- EX. PROPERTY LINE
- EX. RIGHT-OF-WAY
- EX. ADJACENT OWNERS
- EX. EASEMENT
- EX. CHAIN LINK FENCE
- EX. WOOD FENCE
- EX. COMMUNICATIONS LINE
- EX. OVERHEAD ELECTRIC LINE
- EX. WATER LINE
- EX. SANITARY SEWER
- EX. STORM SEWER
- EX. MAJOR CONTOUR (5')
- EX. MINOR CONTOUR (1')
- PROP. SETBACK LINE
- PROP. EASEMENT
- PROP. WATER LINE
- PROP. SANITARY SEWER
- PROP. STORM SEWER
- PROP. MAJOR CONTOUR (5')
- PROP. MINOR CONTOUR (1')
- PROP. LIMIT OF DISTURBANCE

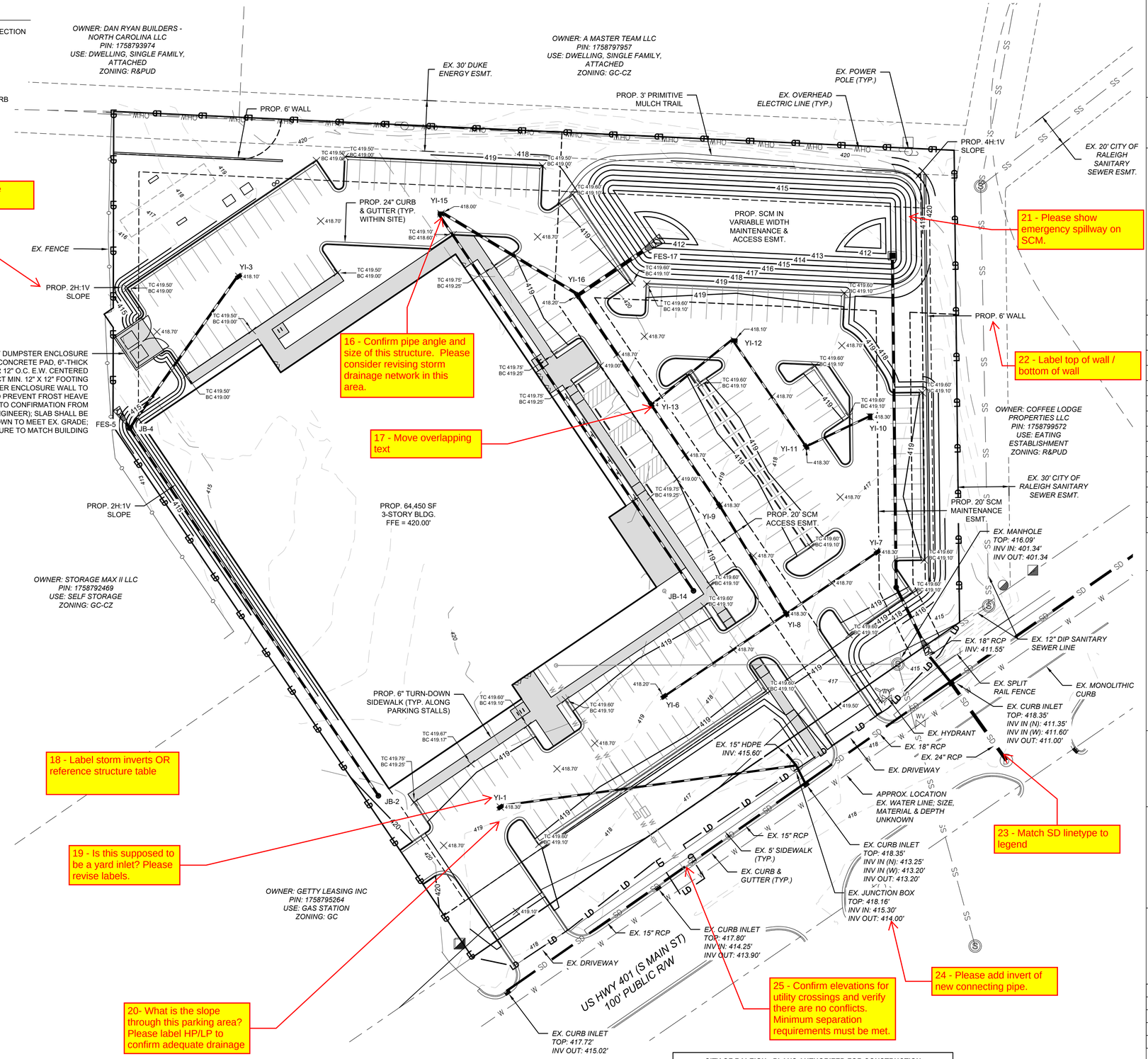

CALL 48 HOURS BEFORE YOU DIG

NORTH CAROLINA ONE-CALL CENTER
1-800-632-4949

CITY OF RALEIGH - PLANS AUTHORIZED FOR CONSTRUCTION

ELECTRONIC APPROVAL: THIS APPROVAL IS BEING ISSUED ELECTRONICALLY. THIS APPROVAL IS VALID ONLY UPON THE SIGNATURE OF A CITY OF RALEIGH REVIEW OFFICER BELOW. THE CITY WILL RETAIN A COPY OF THE APPROVED PLANS. ANY WORK AUTHORIZED BY THIS APPROVAL MUST PROCEED IN ACCORDANCE WITH THE PLANS KEPT ON FILE WITH THE CITY. THIS ELECTRONIC APPROVAL MAY NOT BE EDITED ONCE ISSUED. ANY MODIFICATION TO THIS APPROVAL ONCE ISSUED WILL INVALIDATE THIS APPROVAL.

CITY OF RALEIGH DEVELOPMENT APPROVAL _____

RALEIGH WATER REVIEW OFFICER

ALL CONSTRUCTION SHALL BE IN ACCORDANCE WITH ALL TOWN OF ROLESVILLE, CITY OF RALEIGH AND WAKE COUNTY STANDARDS AND SPECIFICATIONS

© 2024 THIS DRAWING SHALL NOT BE REPRODUCED IN WHOLE OR IN PART WITHOUT WRITTEN PERMISSION OF FLM ENGINEERING, INC.

FLM ENGINEERING
POST OFFICE BOX 91727
RALEIGH, NORTH CAROLINA 27675
PHONE: 919.610.1051
FIRM NC LICENSE NUMBER C-4222

NORTH CAROLINA PROFESSIONAL SEAL 033775 ENGINEER JONATHAN D. FRAZIER 6/3/24

REVISION HISTORY

REV #	DESCRIPTION	DATE	BY

ORIGINAL PLAN SIZE: 24" X 36"

30 15 0 30
SCALE: 1 INCH = 30 FEET

SCALE ADJUSTMENT
THIS BAR IS 1 INCH IN LENGTH ON ORIGINAL DRAWING
0 1"
IF IT IS NOT 1 INCH ON THIS SHEET, ADJUST YOUR SCALE ACCORDINGLY

SITE CONSTRUCTION PLANS

PINE GLO
414 S MAIN ST
ROLESVILLE, NC 27571

OPTIMAL GLO LLC

DATE:	06-03-2024
SCALE:	AS SHOWN
DESIGNED BY:	FLM
APPROVED BY:	FLM
PROJECT NO.:	24028

GRADING & DRAINAGE PLAN

C-6

SHEET 6 OF 18

LEGEND

- EX. PROPERTY LINE
- EX. RIGHT-OF-WAY
- EX. ADJACENT OWNERS
- EX. EASEMENT
- EX. CHAIN LINK FENCE
- EX. WOOD FENCE
- EX. COMMUNICATIONS LINE
- EX. OVERHEAD ELECTRIC LINE
- EX. WATER LINE
- EX. SANITARY SEWER
- EX. STORM SEWER
- EX. MAJOR CONTOUR (5')
- EX. MINOR CONTOUR (1')
- PROP. SETBACK LINE
- PROP. EASEMENT
- PROP. WATER LINE
- PROP. SANITARY SEWER
- PROP. STORM SEWER
- PROP. MAJOR CONTOUR (5')
- PROP. MINOR CONTOUR (1')
- PROP. LIMIT OF DISTURBANCE
- SHALLOW LAND AREA (2,280 SF, 35%) (MDC 3, 9)
- SHALLOW WATER AREA (2,280 SF, 35%) (MDC 3, 8)
- DEEP POOL AREA (FOREBAY 9763 SF, 15%; NON-FOREBAY 976 SF, 15%) (MDC 6, 7)

STORMWATER WETLAND PLANTING TABLE (MDC 12, 13, 14)

QUANTITY	BOTANICAL NAME	COMMON NAME	SIZE	SPACING
SHALLOW WATER PLANTINGS (AREA = 2,280 SQ. FT.; 50 HERBACEOUS PLANTS PER 200 SQ. FT.; 570 TOTAL PLANTS REQ.)				
114	ACORUS SUBCORDATUM	SWEETFLAG	4 CU. IN.	2' O.C.
114	HYDROLEA QUADRIVALVIS	WATERPOD	4 CU. IN.	2' O.C.
114	IRIS VIRGINICA	BLUE FLAG IRIS	4 CU. IN.	2' O.C.
114	SAGITTARIA LATIFOLIA	DUCK POTATO	4 CU. IN.	2' O.C.
114	SAURURUS CERNUUS	LIZARD'S TAIL	4 CU. IN.	2' O.C.
SHALLOW LAND PLANTINGS (AREA = 2,280 SQ. FT.; 50 HERBACEOUS PLANTS PER 200 SQ. FT.; 570 TOTAL PLANTS REQ.)				
190	CAREX TENERA	QUILL SEDGE	4 CU. IN.	2' O.C.
190	HIBISCUS COCCINEUS	SCARLET ROSE MALLOW	4 CU. IN.	2' O.C.
190	LOBELIA ELONGATA	LONGLEAF LOBELIA	4 CU. IN.	2' O.C.

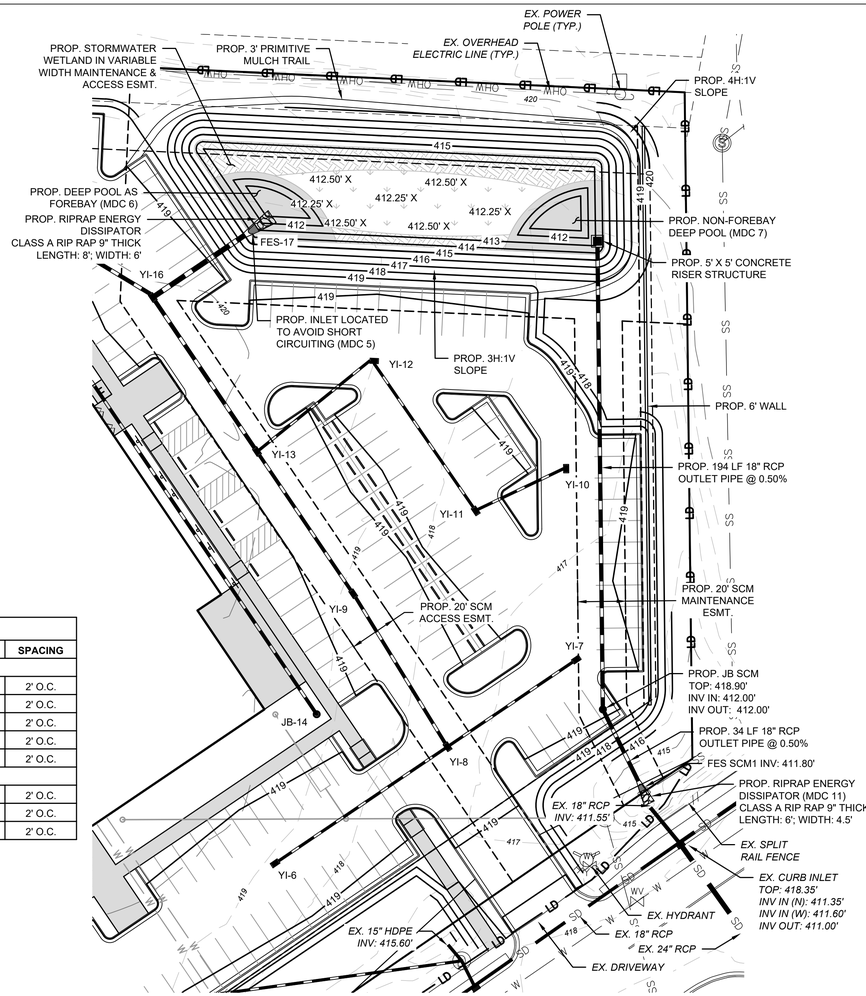

STORMWATER WETLAND PLAN VIEW
SCALE: 1" = 30'

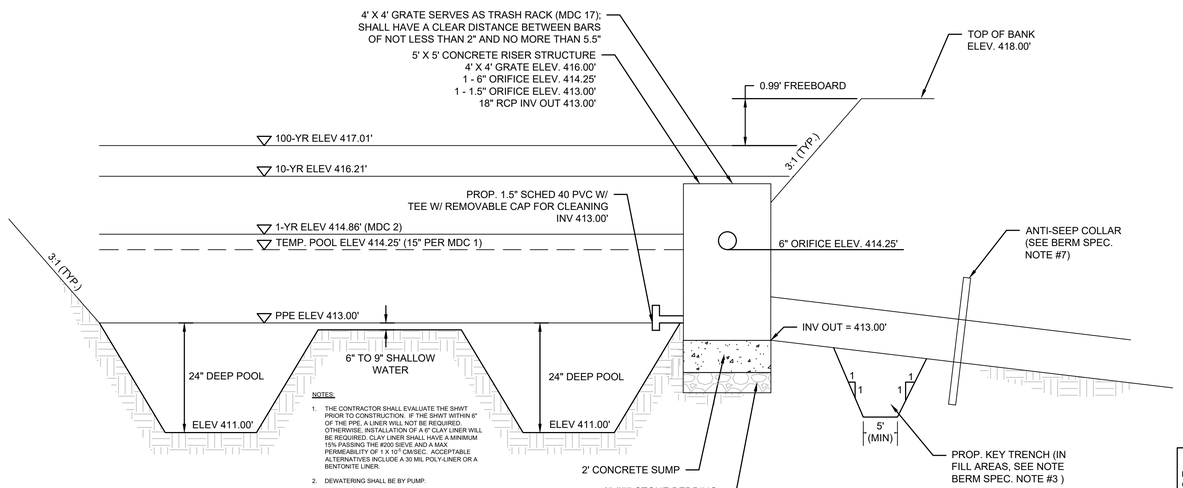

NOTES:

1. THE CONTRACTOR SHALL EVALUATE THE SHWT PRIOR TO CONSTRUCTION. IF THE SHWT WITHIN 6" OF THE PPE, A LINER WILL NOT BE REQUIRED. OTHERWISE, INSTALLATION OF A 6" CLAY LINER WILL BE REQUIRED. CLAY LINER SHALL HAVE A MINIMUM 15% PASSING THE #200 SIEVE AND A MAX PERMEABILITY OF 1 X 10^{-5} CM/SEC. ACCEPTABLE ALTERNATIVES INCLUDE A 30 MIL POLY-LINER OR A BENTONITE LINER.
2. DEWATERING SHALL BE BY PUMP.
3. DRAWDOWN TIME IS 52.3 HOURS (2.2 DAYS) (MDC 10)
4. THE DAM STRUCTURE, INCLUDING FRONT AND BACK EMBANKMENT SLOPES, OF THE POND SHALL BE VEGETATED WITH NON-CLUMPING TURF GRASS; TREES AND WOODY SHRUBS SHALL NOT BE ALLOWED (MDC 11)

STORMWATER WETLAND CROSS-SECTION
NOT TO SCALE

CALL 48 HOURS BEFORE YOU DIG

NORTH CAROLINA ONE-CALL CENTER
1-800-632-4949

NOTES

1. THE WETLAND MUST BE STABILIZED WITHIN 14 DAYS OF CONSTRUCTION. CONSTRUCTION SHALL BE SEQUENCED SO THAT VEGETATION CAN BE PLANTED AND THE WETLAND BROUGHT ONLINE WITHIN 14 DAYS. PLANTS MAY NEED TO BE WATERED DURING THIS TIME IF THE DEVICE IS NOT BROUGHT ONLINE THE SAME DAY. STABILIZATION MAY BE IN THE FORM OF FINAL VEGETATION PLANTINGS OR A TEMPORARY MEANS UNTIL THE VEGETATION BECOMES ESTABLISHED. IF USING A TEMPORARY MEANS, CONTRACTOR SHALL PROVIDE A WET HYDROSEED MIX. CONTRACTOR SHALL SCARIFY THE SOIL TO A HALF-INCH PRIOR TO HYDROSEEDING.
2. INLET AND OUTLET CHANNELS SHALL BE PROTECTED FROM SCOUR THAT MAY OCCUR DURING PERIODS OF HIGH FLOW. STANDARD EROSION CONTROL MEASURES SHOULD BE USED.
3. THE STORMWATER WETLAND SHOULD BE STAKED AT THE ONSET OF THE PLANTING SEASON. WATER DEPTHS IN THE WETLAND SHOULD BE MEASURED TO CONFIRM THE ORIGINAL PLANTING ZONES. AT THIS TIME, IT MAY BE NECESSARY TO MODIFY THE PLANTING PLAN TO REFLECT ALTERED DEPTHS OR THE AVAILABILITY OF WETLAND PLANT STOCK. CONTRACTOR SHALL COORDINATE PLANTINGS, PLANTING ZONES AND WATER DEPTHS WITH THE ENGINEER. SURVEYED PLANTING ZONES SHOULD BE MARKED ON AN "AS-BUILT" OR RECORD DESIGN PLAN AND LOCATED IN THE FIELD USING STAKES OR FLAGS.
4. THE WETLAND SHOULD BE DRAINED FOR NO MORE THAN 3 DAYS PRIOR TO THE PLANTING DATE (WHICH SHOULD COINCIDE WITH THE DELIVERY DATE FOR THE WETLAND PLANT STOCK) TO PRESERVE SOIL MOISTURE AND WORKABILITY.
5. NURSERY STOCK SHALL BE TRANSPLANTED FROM LOCAL AQUATIC PLANT NURSERIES. THE OPTIMAL PERIOD FOR TRANSPLANTING EXTENDS FROM EARLY APRIL TO MID-JUNE SO THAT THE WETLAND PLANTS WILL HAVE A FULL GROWING SEASON TO BUILD THE ROOT RESERVES NEEDED TO SURVIVE THE WINTER. HOWEVER, SOME SPECIES MAY BE PLANTED SUCCESSFULLY IN EARLY FALL. CONTRACTOR SHALL CONTACT NURSERY WELL IN ADVANCE OF CONSTRUCTION TO ENSURE THAT THEY WILL HAVE THE DESIRED SPECIES AVAILABLE.
6. POST-NURSERY CARE OF WETLAND PLANTS IS VERY IMPORTANT IN THE INTERVAL BETWEEN DELIVERY OF THE PLANTS AND THEIR SUBSEQUENT INSTALLATION BECAUSE THEY ARE PRONE TO DESICCATION. STOCK SHOULD BE FREQUENTLY WATERED AND SHADED.
7. SEASONAL HIGH WATER TABLE (SHWT) SHALL BE EVALUATED PRIOR TO CONSTRUCTION. IF SHWT IS WITHIN 6" OF PERMANENT POOL ELEVATION, A LINER WILL NOT BE REQUIRED. OTHERWISE, INSTALLATION OF A 6" CLAY LINER WILL BE REQUIRED. CLAY LINER SHALL HAVE A MINIMUM 15% PASSING THE #200 SIEVE AND A MAX PERMEABILITY OF 1 X 10^{-5} CM/SEC. ACCEPTABLE ALTERNATIVES INCLUDE A 30 MIL POLY-LINER OR A BENTONITE LINER.
8. GRADES SHOWN REPRESENT FINISH GRADE ELEVATIONS. TO ACHIEVE FINISH GRADE ELEVATIONS, INSTALL 4" OF TOPSOIL.
9. ADJUST THE PH, COMPACTION, AND OTHER ATTRIBUTES OF THE FIRST 12" DEPTH OF THE SOIL IF NECESSARY TO PROMOTE PLANT ESTABLISHMENT AND GROWTH (MDC 4).
10. PROVIDE PLANTS PER TABLE ON THIS SHEET. DAM STRUCTURE AND PERIMETER FILL SLOPES SHALL BE PLANTED WITH NON-CLUMPING TURF GRASS. TREES AND WOODY SHRUBS NOT ALLOWED (MDC 15).
11. CATTAILS OR ANY OTHER INVASIVE SPECIES SHALL NOT BE PLANTED IN WETLAND (MDC 16).

OUTLET STRUCTURE NOTES & SPECIFICATIONS

1. RCP OUTLET SHALL BE CLASS III RCP MEETING REQUIREMENTS OF ASTM C76. THE PIPE JOINTS SHALL BE MORTAR OR FLEXIBLE PLASTIC TYPE JOINT.
2. THE MANHOLE OUTLET RISER SHALL MEET ASTM C-913. THE MANHOLE JOINTS SHALL BE ASTM C-443 RUBBER GASKET JOINTS. MANHOLE JOINTS SHALL BE SECURELY ANCHORED TO PREVENT SEPARATION. CONTRACTOR IS RESPONSIBLE FOR DESIGN OF THE MANHOLE SECTION ANCHORING SYSTEM.
3. WATERTIGHT SEAL SHALL BE PROVIDED AT RISER/BARREL INTERFACE. PERVIOUS MATERIAL SUCH AS SAND, GRAVEL, OR CRUSHED STONE SHALL NOT BE USED AS BACKFILL AROUND THE PIPE OR ANTI-SEEP COLLAR. FILL MATERIAL AROUND THE RISER/BARREL STRUCTURE SHALL BE PLACED IN 4" LAYERS AND COMPACTED TO THE SAME DENSITY AS THE ADJACENT EMBANKMENT.
4. OUTLET STRUCTURE SHALL BE PROVIDED WITH STEPS 1'-2" ON CENTER. STEPS SHALL BE IN ACCORDANCE WITH NCDOT STD. 840.66.
5. CONCRETE ANTI-FLOATATION BLOCK SHALL BE PRECAST DURING FABRICATION. IF THE CONCRETE ANTI-FLOATATION BLOCK IS CAST SEPARATE FROM THE MANHOLE ASSEMBLY THE CONTRACTOR SHALL BE RESPONSIBLE FOR ANCHORING THE ANTI-FLOATATION BLOCK TO THE MANHOLE RISER ASSEMBLY.
6. ALL POURED CONCRETE SHALL BE A MINIMUM 3,000 PSI (28 DAY) UNLESS OTHERWISE NOTED.
7. NON-WOVEN GEOTEXTILE FABRIC SHALL BE PLACED AROUND EACH JOINT OF THE RCP OUTLET BARREL IN 2' WIDE STRIPS CENTERED ON JOINT. FABRIC SHALL BE AMOCO STYLE 4553 POLYPROPYLENE NON-WOVEN NEEDLE PUNCHED OR APPROVED EQUAL (NON-WOVEN FABRIC).

BERM SPECIFICATIONS

1. ALL FILL SOILS FOR BERM SECTION SHALL BE CLEAN, IMPERMEABLE MATERIAL AND COMPACTED TO AT LEAST 98% STANDARD PROCTOR MAXIMUM DRY DENSITY, AT OPTIMUM MOISTURE CONTENT. NO BLASTED MATERIALS SHALL BE USED IN THE EMBANKMENT CONSTRUCTION. SOILS SHALL NOT EXHIBIT SIGNIFICANT SHRINK/SWELL OR DISPERSIVE CHARACTERISTICS. THE ON-SITE GEOTECHNICAL ENGINEER SHALL APPROVE THE SOILS FOR PLACEMENT WITHIN THE BERM SECTION. THE GEOTECHNICAL ENGINEER SHALL ALSO SPECIFY THE METHODS TO BE USED FOR PLACEMENT OF FILL.
2. IN ALL FILL AREAS OF THE BERM, A SOILS COMPACTION TEST SHALL BE CONDUCTED EACH 2,500 SQUARE FEET PER VERTICAL CUT OF FILL.
3. A KEY TRENCH IS TO BE PROVIDED IN ALL FILL AREAS. TRENCH TO EXTEND A MINIMUM OF TWO FEET BELOW EXISTING GRADE. THE MINIMUM BOTTOM WIDTH SHALL BE WIDE ENOUGH TO PERMIT OPERATION OF EXCAVATION AND COMPACTION EQUIPMENT, BUT IN NO CASE SHALL BE LESS THAN 2' WIDE. CONTRACTOR SHALL CONFIRM KEY TRENCH DEPTH AND WIDTH WITH THE ON-SITE GEOTECHNICAL ENGINEER. SOILS AND COMPACTION FOR KEY TRENCH SHALL MEET ALL REQUIREMENTS OF #1 ABOVE.
4. FILL PLACEMENT SHALL NOT EXCEED A MAXIMUM OF 8" LIFTS. EACH LIFT SHALL BE CONTINUOUS FOR THE ENTIRE LENGTH OF EMBANKMENT. BEFORE PLACEMENT OF FILL FOR THE BERM SECTION, ALL UNSUITABLE MATERIAL SHALL BE REMOVED AND THE SURFACE PROPERLY PREPARED FOR FILL PLACEMENT.
5. NO TREES OF ANY TYPE MAY BE LOCATED ON THE BERM SECTION.
6. SIDE SLOPES SHALL BE LINED WITH NAG S75, OR APPROVED EQUAL.
7. INSTALL ANTI-SEEP COLLAR AT MIDPOINT OF OUTLET PIPE. CONCRETE SHALL BE 3,000 PSI (28 DAYS) AND REINFORCED WITH #4 REBAR 12" O.C. EACH WAY AND SHALL EXTEND AT LEAST 8" AROUND ALL SIDES OF PIPE. MINIMUM BEARING CAPACITY BENEATH COLLAR SHALL BE 2,000 PSF.

STORMWATER WETLAND MAINTENANCE NOTES

1. THE LANDSCAPE PROFESSIONAL MANAGING THE WETLAND MUST UNDERSTAND THE BIOLOGICAL REQUIREMENTS OF THE PLANTS AND MANAGE WATER LEVELS APPROPRIATELY TO PROVIDE FOR THEIR NEEDS.
2. ALTHOUGH WETLAND PLANTS REQUIRE WATER FOR GROWTH AND REPRODUCTION, THEY CAN BE KILLED BY DROWNING IN EXCESSIVELY DEEP WATER. USUALLY, INITIAL GROWTH IS BEST WITH TRANSPLANTED PLANTS IN WET, WELL-AERATED SOIL. OCCASIONAL INUNDATION FOLLOWED BY EXPOSURE TO AIR OF THE MAJORITY OF THE VEGETATION ENABLES THE PLANTS TO OBTAIN OXYGEN AND GROW OPTIMALLY. CONVERSELY, FREQUENT SOIL SATURATION IS IMPORTANT FOR WETLAND PLANT SURVIVAL.
3. DRAMATIC SHIFTS CAN OCCUR AS PLANT SUCCESSION PROCEEDS. THE PLANT COMMUNITY REFLECTS MANAGEMENT AND CAN INDICATE PROBLEMS OR THE RESULTS OF IMPROVEMENTS. FOR EXAMPLE, A REQUIREMENT OF SUBMERGED AQUATIC PLANTS, SUCH AS PONDWEED (POTAMOGETON SPP.), IS LIGHT PENETRATION INTO THE WATER COLUMN. THE DISAPPEARANCE OF THESE PLANTS MAY INDICATE INADEQUATE WATER CLARITY. THE APPEARANCE OF INVASIVE SPECIES OR DEVELOPMENT OF A MONOCULTURE IS ALSO A SIGN OF A PROBLEM WITH THE AQUATIC/SOIL/VEGETATIVE REQUIREMENTS. FOR INSTANCE, MANY INVASIVE SPECIES CAN QUICKLY SPREAD AND TAKE OVER A WETLAND. IF CATTAILS BECOME INVASIVE, THEY CAN BE REMOVED BY A LICENSED AQUATIC PESTICIDE APPLICATOR BY WIPING AQUATIC GLYPHOSATE, A SYSTEMIC HERBICIDE, ON THE CATTAILS.
4. UNLIKE MAINTENANCE REQUIREMENTS FOR WET OR DRY STORMWATER PONDS, SEDIMENT SHOULD ONLY BE SELECTIVELY REMOVED FROM STORMWATER WETLANDS, PRIMARILY FROM THE FOREBAY.SEDIMENT REMOVAL DISTURBS STABLE VEGETATION COVER AND DISRUPTS FLOWPATHS THROUGH THE WETLAND. THE TOP FEW INCHES OF SEDIMENT SHOULD BE STOCKPILED SO THAT IT CAN BE REPLACED OVER THE SURFACE OF THE WETLAND AFTER THE COMPLETION OF SEDIMENT REMOVAL TO RE-ESTABLISH THE VEGETATIVE COVER USING ITS OWN SEED BANK. ACCUMULATED SEDIMENT SHOULD BE REMOVED FROM AROUND INLET AND OUTLET STRUCTURES.
5. THE TOWN OF WAKE FOREST SHALL NOT BE RESPONSIBLE FOR ANY MAINTENANCE TO THE STORMWATER CONTROL MEASURES (SCMs).

CITY OF RALEIGH - PLANS AUTHORIZED FOR CONSTRUCTION

ELECTRONIC APPROVAL: THIS APPROVAL IS BEING ISSUED ELECTRONICALLY. THIS APPROVAL IS VALID ONLY UPON THE SIGNATURE OF A CITY OF RALEIGH REVIEW OFFICER BELOW. THE CITY WILL RETAIN A COPY OF THE APPROVED PLANS. ANY WORK AUTHORIZED BY THIS APPROVAL MUST PROCEED IN ACCORDANCE WITH THE PLANS KEPT ON FILE WITH THE CITY. THIS ELECTRONIC APPROVAL MAY NOT BE EDITED ONCE ISSUED. ANY MODIFICATION TO THIS APPROVAL ONCE ISSUED WILL INVALIDATE THIS APPROVAL.

CITY OF RALEIGH DEVELOPMENT APPROVAL _____

RALEIGH WATER REVIEW OFFICER

ALL CONSTRUCTION SHALL BE IN ACCORDANCE WITH ALL TOWN OF ROLESVILLE, CITY OF RALEIGH AND WAKE COUNTY STANDARDS AND SPECIFICATIONS

FLM ENGINEERING

POST OFFICE BOX 91727
RALEIGH, NORTH CAROLINA 27675
PHONE: 919.610.1051
FIRM NC LICENSE NUMBER C-4222

NORTH CAROLINA PROFESSIONAL SEAL 033775 ENGINEER JONATHAN D. FRAZIER 6/3/24

REVISION HISTORY

REV #	DESCRIPTION	DATE	BY

ORIGINAL PLAN SIZE: 24" X 36"

30 15 0 30
SCALE: 1 INCH = 30 FEET

N

SCALE ADJUSTMENT

THIS BAR IS 1 INCH IN LENGTH ON ORIGINAL DRAWING
0 1"
IF IT IS NOT 1 INCH ON THIS SHEET, ADJUST YOUR SCALE ACCORDINGLY

SITE CONSTRUCTION PLANS

PINE GLO
414 S MAIN ST
ROLESVILLE, NC 27571

OPTIMAL GLO LLC

DATE:	06-03-2024
SCALE:	AS SHOWN
DESIGNED BY:	FLM
APPROVED BY:	FLM
PROJECT NO.:	24028

SCM DETAILS

C-7

SHEET 7 OF 18

© 2024 THIS DRAWING SHALL NOT BE REPRODUCED IN WHOLE OR IN PART WITHOUT WRITTEN PERMISSION OF FLM ENGINEERING, INC.

WAKE COUNTY CONSTRUCTION SEQUENCE

1. SCHEDULE A PRECONSTRUCTION CONFERENCE WITH THE ENVIRONMENTAL CONSULTANT. OBTAIN A LAND-DISTURBING PERMIT.

PHASE 1

2. INSTALL GRAVEL CONSTRUCTION PADS, TEMPORARY DIVERSION, SILT FENCE, SKIMMER SEDIMENT BASIN OR OTHER MEASURES AS SHOWN ON THE APPROVED PLAN. CLEAR ONLY AS NECESSARY TO INSTALL THESE DEVICES. SEED TEMPORARY DIVERSIONS AND BASIN IMMEDIATELY AFTER CONSTRUCTION.
3. CALL WAKE COUNTY FOR AN ONSITE INSPECTION BY THE ENVIRONMENTAL CONSULTANT TO OBTAIN A CERTIFICATE OF COMPLIANCE.
4. BEGIN DEMOLITION, CLEARING AND GRUBBING. MAINTAIN DEVICES AS NEEDED.
5. BEGIN ROUGH GRADING.

PHASE 2

6. INSTALL STORM SEWER AND PROTECT INLETS WITH INLET PROTECTION, OR OTHER APPROVED MEASURES AS SHOWN ON THE PLAN.
7. ONCE STORM SEWER IS INSTALLED AND DIRECTING RUNOFF TO BASIN, INSTALL RETAINING IN BASIN.
8. STABILIZE SITE AS AREAS ARE BROUGHT UP TO FINISH GRADE WITH VEGETATION, PAVING, ETC. SEED AND MULCH DENUDED AREAS PER GROUND STABILIZATION TIME FRAMES.
9. WHEN CONSTRUCTION IS COMPLETE AND ALL AREAS ARE STABILIZED COMPLETELY, CALL WAKE COUNTY FOR AN INSPECTION BY THE ENVIRONMENTAL CONSULTANT.

PHASE 3 (SEE GRADING & DRAINAGE PLAN, SHEET C-6)

10. IF SITE IS APPROVED, REMOVE TEMPORARY DIVERSIONS, SILT FENCE, ETC., AND SEED OR STABILIZE ANY RESULTING BARE AREAS. ALL REMAINING PERMANENT EROSION CONTROL DEVICES, SUCH AS VELOCITY DISSIPATORS, SHOULD NOW BE INSTALLED.
11. UPON STABILIZATION OF THE ENTIRE DISTURBED AREA, CONVERT SKIMMER BASIN TO STORMWATER WETLAND AS SHOWN ON THE APPROVED PLANS.
12. WHEN VEGETATION HAS BECOME ESTABLISHED, CALL FOR A FINAL SITE INSPECTION BY THE ENVIRONMENTAL CONSULTANT. OBTAIN A CERTIFICATE OF COMPLETION.

EROSION CONTROL NOTES

1. ALL LAND DISTURBING ACTIVITIES SHALL BE CONDUCTED IN ACCORDANCE WITH WAKE COUNTY AND NCDEQ STANDARDS.
2. ALL TEMPORARY EROSION CONTROL MEASURES SHALL BE MAINTAINED IN PROPER WORKING CONDITION DURING THE PERIOD OF CONSTRUCTION.
3. ADDITIONAL EROSION CONTROL MEASURES AND/OR MODIFICATIONS TO PROPOSED MEASURES MAY BE NECESSARY DEPENDING ON ACTUAL SITE CONDITIONS.
4. THE TOTAL DISTURBED AREA IS 4.33 ACRE.
5. SILT FENCE OUTLETS TO BE PLACED AS SHOWN AND AT LOW POINTS ALONG SILT FENCE AS NECESSARY.
6. SEE EROSION CONTROL CALCULATIONS ON SHEET C-2.
7. SKIMMER BASIN GRADES SHOWN ARE 2H:1V UNLESS OTHERWISE NOTED.
8. CONTRACTOR SHALL ESTABLISH GROUND COVER IMMEDIATELY AFTER DISTURBANCE DURING CONSTRUCTION OF PERMANENT SWALES.
9. PROVIDE STABLE TRANSITION AT TEMPORARY DIVERSION ENTRANCES TO BASIN - LINE SLOPE AT ENTRANCE WITH 12" ROCK RIPRAP.
10. RIPRAP ENERGY DISSIPATOR DIMENSIONS SHOWN ON DETAIL SHEET C-15.
11. DISTURBED AREAS TO BE STABILIZED AND GROUND COVER SHOULD BE ACHIEVED WITHIN 7 WORKING DAYS FOLLOWING COMPLETION OF DEVELOPMENT, PER THE NPDES CONSTRUCTION STORMWATER GENERAL PERMIT.
12. SEE DETAIL SHEETS C-14 AND C-15 FOR EROSION AND SEDIMENT CONTROL MAINTENANCE REQUIREMENTS.

BASIN CONVERSION SEQUENCE:

1. SCHEDULE A SITE MEETING WITH THE ENVIRONMENTAL ENGINEER / CONSULTANT TO DETERMINE IF A BASIN CAN BE CONVERTED. INSTALL SILT FENCING OR OTHER TEMPORARY EROSION CONTROL MEASURES AS NEEDED PRIOR TO CONVERSION OF THE BASIN.
2. DEWATER BASIN(S) VIA SILT BAG. REMOVE ACCUMULATED SEDIMENT. FINE GRADE WETLAND IN PREPARATION FOR PLANTING.
3. PERFORM PLANTING PREPARATION, PLANT/SEED, MULCH AND ASPHALT TACK ANY RESULTING BARE AREAS IMMEDIATELY.
4. INSTALL VELOCITY DISSIPATORS AS REQUIRED ON THE EROSION CONTROL PLAN.
5. WHEN SITE IS FULLY STABILIZED, CALL ENVIRONMENTAL ENGINEER / CONSULTANT FOR APPROVAL OF REMOVING REMAINING TEMPORARY EROSION CONTROL MEASURES AND ADVISE ON WHEN SITE CAN BE ISSUED A CERTIFICATE OF COMPLETION.

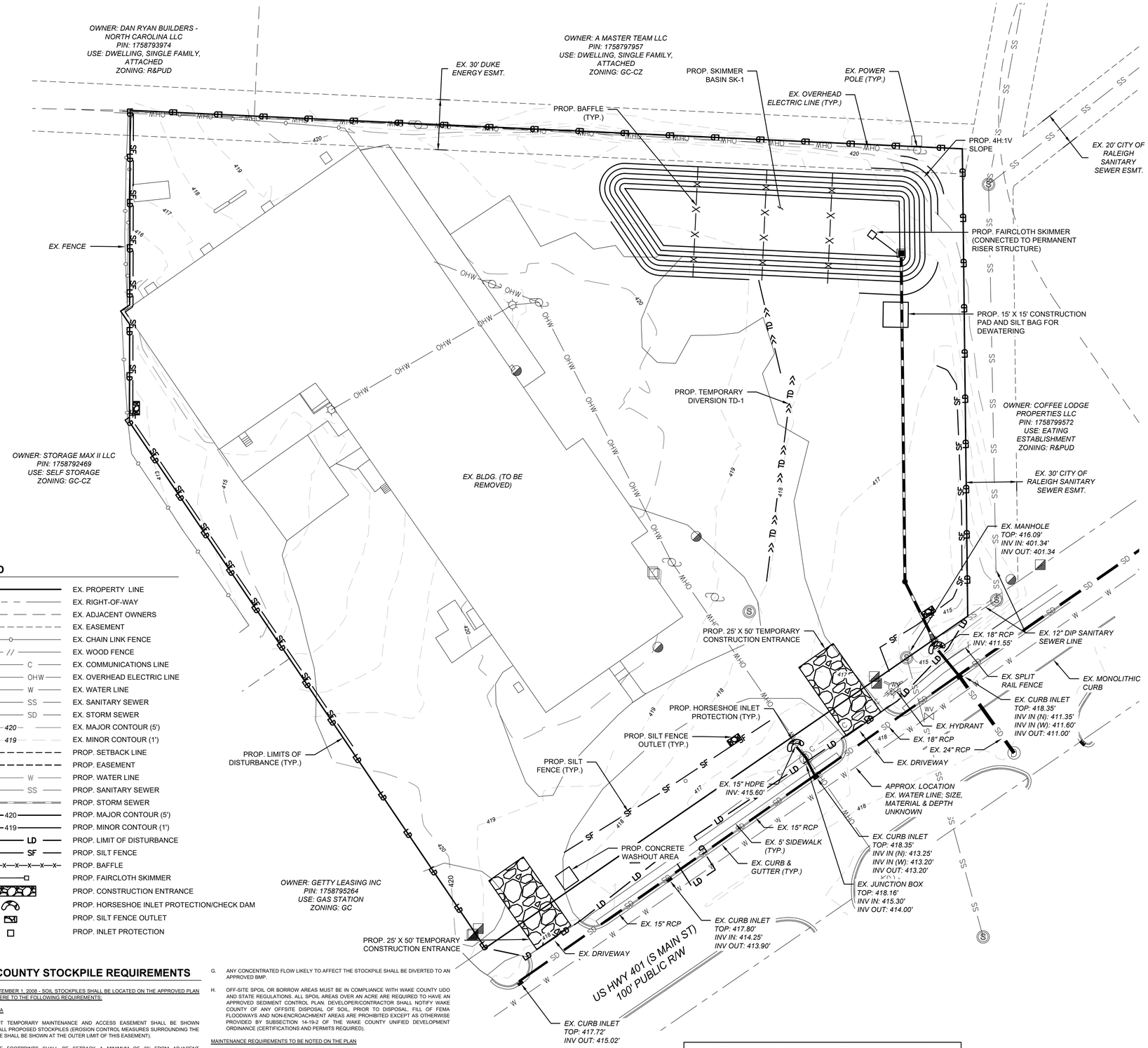

LEGEND

	EX. PROPERTY LINE
	EX. RIGHT-OF-WAY
	EX. ADJACENT OWNERS
	EX. EASEMENT
	EX. CHAIN LINK FENCE
	EX. WOOD FENCE
C	EX. COMMUNICATIONS LINE
OHW	EX. OVERHEAD ELECTRIC LINE
W	EX. WATER LINE
SS	EX. SANITARY SEWER
SD	EX. STORM SEWER
420	EX. MAJOR CONTOUR (5')
419	EX. MINOR CONTOUR (1')
	PROP. SETBACK LINE
	PROP. EASEMENT
W	PROP. WATER LINE
SS	PROP. SANITARY SEWER
	PROP. STORM SEWER
420	PROP. MAJOR CONTOUR (5')
419	PROP. MINOR CONTOUR (1')
LD	PROP. LIMIT OF DISTURBANCE
SF	PROP. SILT FENCE
	PROP. BAFFLE
	PROP. FAIRCLOTH SKIMMER
	PROP. CONSTRUCTION ENTRANCE
	PROP. HORSESHOE INLET PROTECTION/CHECK DAM
	PROP. SILT FENCE OUTLET
	PROP. INLET PROTECTION

WAKE COUNTY STOCKPILE REQUIREMENTS

EFFECTIVE SEPTEMBER 1, 2008 - SOIL STOCKPILES SHALL BE LOCATED ON THE APPROVED PLAN AND SHALL ADHERE TO THE FOLLOWING REQUIREMENTS:

DESIGN CRITERIA

A. A 25-FOOT TEMPORARY MAINTENANCE AND ACCESS EASEMENT SHALL BE SHOWN AROUND ALL PROPOSED STOCKPILES (EROSION CONTROL MEASURES SURROUNDING THE STOCKPILE SHALL BE SHOWN AT THE OUTER LIMIT OF THIS EASEMENT).

B. STOCKPILE FOOTPRINTS SHALL BE SETBACK A MINIMUM OF 25' FROM ADJACENT PROPERTY LINES.

C. A NOTE SHALL BE PROVIDED ON THE APPROVED PLAN THAT STOCKPILE HEIGHT SHALL NOT EXCEED 35 FEET.

D. STOCKPILE SLOPES SHALL BE 2:1 OR FLATTER.

E. APPROVED BMPS SHALL BE SHOWN ON A PLAN TO CONTROL ANY POTENTIAL SEDIMENT LOSS FROM A STOCKPILE.

F. STOCKPILING MATERIALS ADJACENT TO A DITCH, DRAINAGEWAY, WATERCOURSE, WETLAND, STREAM BUFFER, OR OTHER BODY OF WATER SHALL BE AVOIDED UNLESS AN ALTERNATIVE LOCATION IS DEMONSTRATED TO BE UNAVAILABLE.

G. ANY CONCENTRATED FLOW LIKELY TO AFFECT THE STOCKPILE SHALL BE DIVERTED TO AN APPROVED BMP.

H. OFF-SITE SPOIL OR BORROW AREAS MUST BE IN COMPLIANCE WITH WAKE COUNTY UDO AND STATE REGULATIONS. ALL SPOIL AREAS OVER AN ACRE ARE REQUIRED TO HAVE AN APPROVED SEDIMENT CONTROL PLAN. DEVELOPER/CONTRACTOR SHALL NOTIFY WAKE COUNTY OF ANY OFFSITE DISPOSAL OF SOIL, PRIOR TO DISPOSAL. FILL OF FEMA FLOODWAYS AND NON-ENCROACHMENT AREAS ARE PROHIBITED EXCEPT AS OTHERWISE PROVIDED BY SUBSECTION 14-19-2 OF THE WAKE COUNTY UNIFIED DEVELOPMENT ORDINANCE (CERTIFICATIONS AND PERMITS REQUIRED).

MAINTENANCE REQUIREMENTS TO BE NOTED ON THE PLAN

I. SEEDING OR COVERING STOCKPILES WITH TARPS OR MULCH IS REQUIRED AND WILL REDUCE EROSION PROBLEMS. TARPS SHOULD BE KEYED IN AT THE TOP OF THE SLOPE TO KEEP WATER FROM RUNNING UNDERNEATH THE PLASTIC.

J. IF A STOCKPILE IS TO REMAIN FOR FUTURE USE AFTER THE PROJECT IS COMPLETE (BUILDERS, ETC.), THE FINANCIAL RESPONSIBLE PARTY MUST NOTIFY WAKE COUNTY OF A NEW RESPONSIBLE PARTY FOR THAT STOCKPILE.

K. THE APPROVED PLAN SHALL PROVIDE FOR THE USE OF STAGED SEEDING AND MULCHING ON A CONTINUAL BASIS WHILE THE STOCKPILE IS IN USE.

L. ESTABLISH AND MAINTAIN A VEGETATIVE BUFFER AT THE TOE OF THE SLOPE (WHERE PRACTICAL).

CALL 48 HOURS BEFORE YOU DIG

NORTH CAROLINA ONE-CALL CENTER
1-800-632-4949

CITY OF RALEIGH - PLANS AUTHORIZED FOR CONSTRUCTION

ELECTRONIC APPROVAL: THIS APPROVAL IS BEING ISSUED ELECTRONICALLY. THIS APPROVAL IS VALID ONLY UPON THE SIGNATURE OF A CITY OF RALEIGH REVIEW OFFICER BELOW. THE CITY WILL RETAIN A COPY OF THE APPROVED PLANS. ANY WORK AUTHORIZED BY THIS APPROVAL MUST PROCEED IN ACCORDANCE WITH THE PLANS KEPT ON FILE WITH THE CITY. THIS ELECTRONIC APPROVAL MAY NOT BE EDITED ONCE ISSUED. ANY MODIFICATION TO THIS APPROVAL ONCE ISSUED WILL INVALIDATE THIS APPROVAL.

CITY OF RALEIGH DEVELOPMENT APPROVAL _____
RALEIGH WATER REVIEW OFFICER

ALL CONSTRUCTION SHALL BE IN ACCORDANCE WITH ALL TOWN OF ROLESVILLE, CITY OF RALEIGH AND WAKE COUNTY STANDARDS AND SPECIFICATIONS

© 2024 THIS DRAWING SHALL NOT BE REPRODUCED IN WHOLE OR IN PART WITHOUT WRITTEN PERMISSION OF FLM ENGINEERING, INC.

FLM ENGINEERING
POST OFFICE BOX 91727
RALEIGH, NORTH CAROLINA 27675
PHONE: 919.610.1051
FIRM NC LICENSE NUMBER C-4222

NORTH CAROLINA PROFESSIONAL SEAL 033775 ENGINEER JONATHAN D. FRAZIER 6/3/24

REVISION HISTORY

REV #	DESCRIPTION	DATE	BY

ORIGINAL PLAN SIZE: 24" X 36"

30 15 0 30
SCALE: 1 INCH = 30 FEET

SCALE ADJUSTMENT
THIS BAR IS 1 INCH IN LENGTH ON ORIGINAL DRAWING
0 1"
IF IT IS NOT 1 INCH ON THIS SHEET, ADJUST YOUR SCALE ACCORDINGLY

SITE CONSTRUCTION PLANS
PINE GLO
414 S MAIN ST
ROLESVILLE, NC 27571

OPTIMAL GLO LLC

DATE:	06-03-2024
SCALE:	AS SHOWN
DESIGNED BY:	FLM
APPROVED BY:	FLM
PROJECT NO.:	24028

EROSION & SEDIMENT CONTROL PLAN - PHASE 1

C-8

SHEET 8 OF 18

WAKE COUNTY CONSTRUCTION SEQUENCE

1. SCHEDULE A PRECONSTRUCTION CONFERENCE WITH THE ENVIRONMENTAL CONSULTANT. OBTAIN A LAND-DISTURBING PERMIT.

PHASE 1

2. INSTALL GRAVEL CONSTRUCTION PADS, TEMPORARY DIVERSION, SILT FENCE, SKIMMER SEDIMENT BASIN OR OTHER MEASURES AS SHOWN ON THE APPROVED PLAN. CLEAR ONLY AS NECESSARY TO INSTALL THESE DEVICES. SEED TEMPORARY DIVERSIONS AND BASIN IMMEDIATELY AFTER CONSTRUCTION.
3. CALL WAKE COUNTY FOR AN ONSITE INSPECTION BY THE ENVIRONMENTAL CONSULTANT TO OBTAIN A CERTIFICATE OF COMPLIANCE.
4. BEGIN DEMOLITION, CLEARING AND GRUBBING. MAINTAIN DEVICES AS NEEDED.
5. BEGIN ROUGH GRADING.

PHASE 2

6. INSTALL STORM SEWER AND PROTECT INLETS WITH INLET PROTECTION, OR OTHER APPROVED MEASURES AS SHOWN ON THE PLAN.
7. ONCE STORM SEWER IS INSTALLED AND DIRECTING RUNOFF TO BASIN, INSTALL RETAINING IN BASIN.
8. STABILIZE SITE AS AREAS ARE BROUGHT UP TO FINISH GRADE WITH VEGETATION, PAVING, ETC. SEED AND MULCH DENUDED AREAS PER GROUND STABILIZATION TIME FRAMES.
9. WHEN CONSTRUCTION IS COMPLETE AND ALL AREAS ARE STABILIZED COMPLETELY, CALL WAKE COUNTY FOR AN INSPECTION BY THE ENVIRONMENTAL CONSULTANT.

PHASE 3 (SEE GRADING & DRAINAGE PLAN, SHEET C-6)

10. IF SITE IS APPROVED, REMOVE TEMPORARY DIVERSIONS, SILT FENCE, ETC., AND SEED OR STABILIZE ANY RESULTING BARE AREAS. ALL REMAINING PERMANENT EROSION CONTROL DEVICES, SUCH AS VELOCITY DISSIPATORS, SHOULD NOW BE INSTALLED.
11. UPON STABILIZATION OF THE ENTIRE DISTURBED AREA, CONVERT SKIMMER BASIN TO STORMWATER WETLAND AS SHOWN ON THE APPROVED PLANS.
12. WHEN VEGETATION HAS BECOME ESTABLISHED, CALL FOR A FINAL SITE INSPECTION BY THE ENVIRONMENTAL CONSULTANT. OBTAIN A CERTIFICATE OF COMPLETION.

EROSION CONTROL NOTES

1. ALL LAND DISTURBING ACTIVITIES SHALL BE CONDUCTED IN ACCORDANCE WITH WAKE COUNTY AND NCDEQ STANDARDS.
2. ALL TEMPORARY EROSION CONTROL MEASURES SHALL BE MAINTAINED IN PROPER WORKING CONDITION DURING THE PERIOD OF CONSTRUCTION.
3. ADDITIONAL EROSION CONTROL MEASURES AND/OR MODIFICATIONS TO PROPOSED MEASURES MAY BE NECESSARY DEPENDING ON ACTUAL SITE CONDITIONS.
4. THE TOTAL DISTURBED AREA IS 4.33 ACRE.
5. SILT FENCE OUTLETS TO BE PLACED AS SHOWN AND AT LOW POINTS ALONG SILT FENCE AS NECESSARY.
6. SEE EROSION CONTROL CALCULATIONS ON SHEET C-2.
7. SKIMMER BASIN GRADES SHOWN ARE 2H:1V UNLESS OTHERWISE NOTED.
8. CONTRACTOR SHALL ESTABLISH GROUND COVER IMMEDIATELY AFTER DISTURBANCE DURING CONSTRUCTION OF PERMANENT SWALES.
9. PROVIDE STABLE TRANSITION AT TEMPORARY DIVERSION ENTRANCES TO BASIN - LINE SLOPE AT ENTRANCE WITH 12" ROCK RIPRAP.
10. RIPRAP ENERGY DISSIPATOR DIMENSIONS SHOWN ON DETAIL SHEET C-15.
11. DISTURBED AREAS TO BE STABILIZED AND GROUND COVER SHOULD BE ACHIEVED WITHIN 7 WORKING DAYS FOLLOWING COMPLETION OF DEVELOPMENT, PER THE NPDES CONSTRUCTION STORMWATER GENERAL PERMIT.
12. SEE DETAIL SHEETS C-14 AND C-15 FOR EROSION AND SEDIMENT CONTROL MAINTENANCE REQUIREMENTS.

BASIN CONVERSION SEQUENCE:

1. SCHEDULE A SITE MEETING WITH THE ENVIRONMENTAL ENGINEER / CONSULTANT TO DETERMINE IF A BASIN CAN BE CONVERTED. INSTALL SILT FENCING OR OTHER TEMPORARY EROSION CONTROL MEASURES AS NEEDED PRIOR TO CONVERSION OF THE BASIN.
2. DEWATER BASIN(S) VIA SILT BAG. REMOVE ACCUMULATED SEDIMENT. FINE GRADE WETLAND IN PREPARATION FOR PLANTING.
3. PERFORM PLANTING PREPARATION, PLANT/SEED, MULCH AND ASPHALT TACK ANY RESULTING BARE AREAS IMMEDIATELY.
4. INSTALL VELOCITY DISSIPATORS AS REQUIRED ON THE EROSION CONTROL PLAN.
5. WHEN SITE IS FULLY STABILIZED, CALL ENVIRONMENTAL ENGINEER / CONSULTANT FOR APPROVAL OF REMOVING REMAINING TEMPORARY EROSION CONTROL MEASURES AND ADVISE ON WHEN SITE CAN BE ISSUED A CERTIFICATE OF COMPLETION.

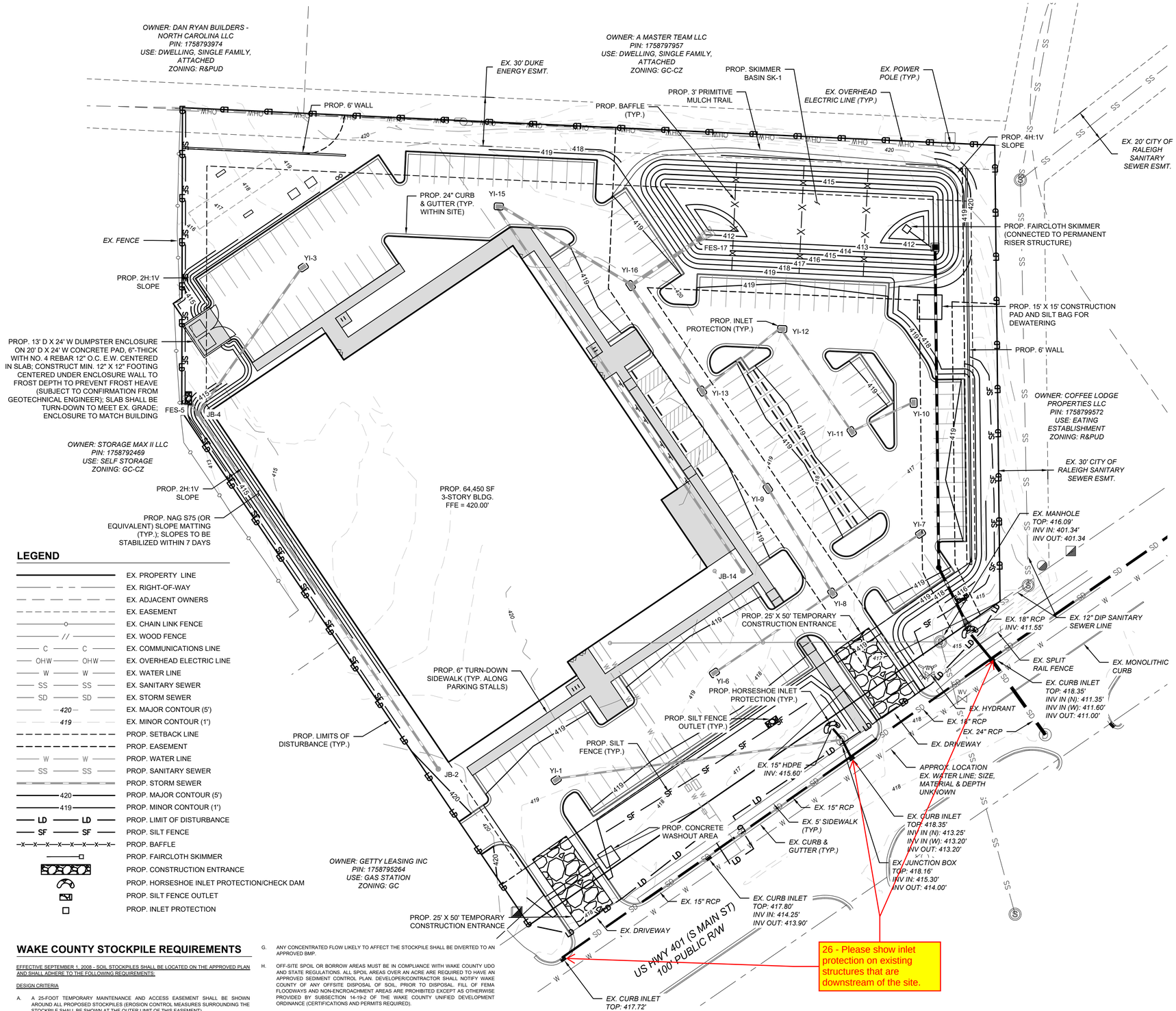

LEGEND

	EX. PROPERTY LINE
	EX. RIGHT-OF-WAY
	EX. ADJACENT OWNERS
	EX. EASEMENT
	EX. CHAIN LINK FENCE
	EX. WOOD FENCE
C	EX. COMMUNICATIONS LINE
OHW	EX. OVERHEAD ELECTRIC LINE
W	EX. WATER LINE
SS	EX. SANITARY SEWER
SD	EX. STORM SEWER
420	EX. MAJOR CONTOUR (5')
419	EX. MINOR CONTOUR (1')
	PROP. SETBACK LINE
	PROP. EASEMENT
W	PROP. WATER LINE
SS	PROP. SANITARY SEWER
	PROP. STORM SEWER
420	PROP. MAJOR CONTOUR (5')
419	PROP. MINOR CONTOUR (1')
LD	PROP. LIMIT OF DISTURBANCE
SF	PROP. SILT FENCE
	PROP. BAFFLE
	PROP. FAIRCLOTH SKIMMER
	PROP. CONSTRUCTION ENTRANCE
	PROP. HORSESHOE INLET PROTECTION/CHECK DAM
	PROP. SILT FENCE OUTLET
	PROP. INLET PROTECTION

WAKE COUNTY STOCKPILE REQUIREMENTS

EFFECTIVE SEPTEMBER 1, 2008 - SOIL STOCKPILES SHALL BE LOCATED ON THE APPROVED PLAN AND SHALL ADHERE TO THE FOLLOWING REQUIREMENTS:

DESIGN CRITERIA

A. A 25-FOOT TEMPORARY MAINTENANCE AND ACCESS EASEMENT SHALL BE SHOWN AROUND ALL PROPOSED STOCKPILES (EROSION CONTROL MEASURES SURROUNDING THE STOCKPILE SHALL BE SHOWN AT THE OUTER LIMIT OF THIS EASEMENT).

B. STOCKPILE FOOTPRINTS SHALL BE SETBACK A MINIMUM OF 25' FROM ADJACENT PROPERTY LINES.

C. A NOTE SHALL BE PROVIDED ON THE APPROVED PLAN THAT STOCKPILE HEIGHT SHALL NOT EXCEED 35 FEET.

D. STOCKPILE SLOPES SHALL BE 2:1 OR FLATTER.

E. APPROVED BMPS SHALL BE SHOWN ON A PLAN TO CONTROL ANY POTENTIAL SEDIMENT LOSS FROM A STOCKPILE.

F. STOCKPILING MATERIALS ADJACENT TO A DITCH, DRAINAGEWAY, WATERCOURSE, WETLAND, STREAM BUFFER, OR OTHER BODY OF WATER SHALL BE AVOIDED UNLESS AN ALTERNATIVE LOCATION IS DEMONSTRATED TO BE UNAVAILABLE.

G. ANY CONCENTRATED FLOW LIKELY TO AFFECT THE STOCKPILE SHALL BE DIVERTED TO AN APPROVED BMP.

H. OFF-SITE SPOIL OR BORROW AREAS MUST BE IN COMPLIANCE WITH WAKE COUNTY UDO AND STATE REGULATIONS. ALL SPOIL AREAS OVER AN ACRE ARE REQUIRED TO HAVE AN APPROVED SEDIMENT CONTROL PLAN. DEVELOPER/CONTRACTOR SHALL NOTIFY WAKE COUNTY OF ANY OFFSITE DISPOSAL OF SOIL, PRIOR TO DISPOSAL. FILL OF FEMA FLOODWAYS AND NON-ENCROACHMENT AREAS ARE PROHIBITED EXCEPT AS OTHERWISE PROVIDED BY SUBSECTION 14-19-2 OF THE WAKE COUNTY UNIFIED DEVELOPMENT ORDINANCE (CERTIFICATIONS AND PERMITS REQUIRED).

MAINTENANCE REQUIREMENTS TO BE NOTED ON THE PLAN

I. SEEDING OR COVERING STOCKPILES WITH TARPS OR MULCH IS REQUIRED AND WILL REDUCE EROSION PROBLEMS. TARPS SHOULD BE KEYED IN AT THE TOP OF THE SLOPE TO KEEP WATER FROM RUNNING UNDERNEATH THE PLASTIC.

J. IF A STOCKPILE IS TO REMAIN FOR FUTURE USE AFTER THE PROJECT IS COMPLETE (BUILDERS, ETC.), THE FINANCIAL RESPONSIBLE PARTY MUST NOTIFY WAKE COUNTY OF A NEW RESPONSIBLE PARTY FOR THAT STOCKPILE.

K. THE APPROVED PLAN SHALL PROVIDE FOR THE USE OF STAGED SEEDING AND MULCHING ON A CONTINUAL BASIS WHILE THE STOCKPILE IS IN USE.

L. ESTABLISH AND MAINTAIN A VEGETATIVE BUFFER AT THE TOE OF THE SLOPE (WHERE PRACTICAL).

CALL 48 HOURS BEFORE YOU DIG

North Carolina 811 www.nc811.org

NORTH CAROLINA ONE-CALL CENTER 1-800-632-4949

CITY OF RALEIGH - PLANS AUTHORIZED FOR CONSTRUCTION

ELECTRONIC APPROVAL: THIS APPROVAL IS BEING ISSUED ELECTRONICALLY. THIS APPROVAL IS VALID ONLY UPON THE SIGNATURE OF A CITY OF RALEIGH REVIEW OFFICER BELOW. THE CITY WILL RETAIN A COPY OF THE APPROVED PLANS. ANY WORK AUTHORIZED BY THIS APPROVAL MUST PROCEED IN ACCORDANCE WITH THE PLANS KEPT ON FILE WITH THE CITY. THIS ELECTRONIC APPROVAL MAY NOT BE EDITED ONCE ISSUED. ANY MODIFICATION TO THIS APPROVAL ONCE ISSUED WILL INVALIDATE THIS APPROVAL.

CITY OF RALEIGH DEVELOPMENT APPROVAL _____

RALEIGH WATER REVIEW OFFICER

ALL CONSTRUCTION SHALL BE IN ACCORDANCE WITH ALL TOWN OF ROLESVILLE, CITY OF RALEIGH AND WAKE COUNTY STANDARDS AND SPECIFICATIONS

© 2024 THIS DRAWING SHALL NOT BE REPRODUCED IN WHOLE OR IN PART WITHOUT WRITTEN PERMISSION OF FLM ENGINEERING, INC.

FLM ENGINEERING
POST OFFICE BOX 91727
RALEIGH, NORTH CAROLINA 27675
PHONE: 919.610.1051
FIRM NC LICENSE NUMBER C-4222

NORTH CAROLINA PROFESSIONAL ENGINEER SEAL 033775 6/3/24 JONATHAN D. FRAZIER

REVISION HISTORY

REV #	DESCRIPTION	DATE	BY

ORIGINAL PLAN SIZE: 24" X 36"

30 15 0 30
SCALE: 1 INCH = 30 FEET

N

SCALE ADJUSTMENT
THIS BAR IS 1 INCH IN LENGTH ON ORIGINAL DRAWING
0 1"
IF IT IS NOT 1 INCH ON THIS SHEET, ADJUST YOUR SCALE ACCORDINGLY

SITE CONSTRUCTION PLANS

PINE GLO
414 S MAIN ST
ROLESVILLE, NC 27571

OPTIMAL GLO LLC

DATE:	06-03-2024
SCALE:	AS SHOWN
DESIGNED BY:	FLM
APPROVED BY:	FLM
PROJECT NO.:	24028

EROSION & SEDIMENT CONTROL PLAN - PHASE 2

C-9

SHEET 9 OF 18

NOTES

1. ALL NEW PLANTINGS SHALL MEET THE REQUIREMENTS OF THE TOWN OF ROLESVILLE LAND DEVELOPMENT ORDINANCE (LDO) SECTION 6.2.
2. ALL DISTURBED AREAS NOT OCCUPIED BY STRUCTURES, PAVING OR PLANTINGS SHALL BE GRADED AND SEEDED AS INDICATED IN SPECIFICATIONS.
3. ALL TREE PLANTINGS SHALL BE MULCHED WITH 4" CLEAN, PINE STRAW MULCH.
4. ALL PLANT BEDS TO BE EDGED WITH TYPICAL "V-CHANNEL" EDGE.
5. A MINIMUM OF FOUR INDIVIDUAL SOIL SAMPLES SHALL BE TAKEN THROUGHOUT THE SITE FOR OVERALL SOIL ANALYSIS.
6. CONTRACTOR TO UTILIZE ALL ONSITE TOPSOIL. CONTRACTOR SHALL SUPPLY ADDITIONAL TOPSOIL AT NO ADDITIONAL COST TO OWNER IF EXISTING TOPSOIL IS NOT SUFFICIENT TO MEET THE NEEDS OF THIS PROJECT.
7. ALL PLANTING AREAS TO RECEIVE 1 CY OF SOIL CONDITIONER FOR EACH 75 SF OF PLANT BED AREA. ACCEPTABLE SOIL CONDITIONERS SHALL BE PULVERIZED PINE BARK, PEAT MOSS OR SHREDDED/COMPOSTED LEAVES.
8. CONTRACTOR TO FIELD VERIFY LOCATION OF EXISTING UTILITIES BEFORE BEGINNING OF GRADING AND LANDSCAPE INSTALLATION.
9. CONTRACTOR TO VERIFY QUANTITIES OF PLANTINGS AS SHOWN. PLANTINGS INDICATED ON PLANS SHALL PREVAIL OVER QUANTITIES INDICATED IN PLANT LIST IF DISCREPANCIES ARISE.
10. ALL PLANTS ARE TO BE THOROUGHLY "WATERED IN" THE SAME DAY AS PLANTED.
11. THE PLANT HOLE WIDTH SHALL BE A MINIMUM THREE TIMES THE DIAMETER OF THE ROOT BALL.
12. REMOVE ALL STRAPPING AND TWINE FROM ROOT BALL. REMOVE WIRE BASKET AND BURLAP FROM TOP 1/3 OF ROOT BALL BEFORE BACKFILLING AROUND BALL IS COMPLETED.
13. ALL TREES WHICH ARE SMOOTH BARKED AT THE TIME OF PLANTING AND HAVE MORE THAN 2' OF ALL TREE WRAPPING SHALL EXTEND FROM THE TOP OF THE BACKFILL TO THE LOWERMOST TREE BRANCHES.
14. ALL TREES, WHEN PLANTED, SHALL HAVE THE SAME RELATIONSHIP TO FINISHED GRADE AS TO THE GRADING PLAN.
15. LANDSCAPING SHOWN MEETS QUANTITY REQUIREMENTS. ALL INSTALLATION AND MAINTENANCE SHALL BE PER TOWN OF ROLESVILLE LDO.
16. ALL ADDITIONAL LANDSCAPING SHALL BE PER OWNER.

LANDSCAPING REQUIREMENTS

PERIMETER BUFFERS

75 LF PERIMETER BUFFER TYPE 3 ALONG PIN 1758793974
4 CANOPY TREES PER 100 LF
2 UNDERSTORY TREES PER 100 LF
60 SHRUBS PER 100 LF

CANOPY TREES REQUIRED: 3
CANOPY TREES PROVIDED: 4

UNDERSTORY TREES REQUIRED: 2
UNDERSTORY TREES PROVIDED: 2

SHRUBS REQUIRED: 45
SHRUBS PROVIDED: 60

250 LF PERIMETER BUFFER TYPE 3 ALONG PIN 1758799572
4 CANOPY TREES PER 100 LF
2 UNDERSTORY TREES PER 100 LF
60 SHRUBS PER 100 LF

CANOPY TREES REQUIRED: 10
CANOPY TREES PROVIDED: 10

UNDERSTORY TREES REQUIRED: 5
UNDERSTORY TREES PROVIDED: 5

SHRUBS REQUIRED: 150
SHRUBS PROVIDED: 155

STREETSCAPE BUFFER

STREET TREES SHALL BE PLACED AT 40' O.C.

CANOPY TREES PROVIDED: 8

PARKING LANDSCAPING

- ALL PARKING SPACES SHALL BE WITHIN 60' FROM THE TRUNK OF A CANOPY TREE
- PARKING PERIMETER SHALL CONSIST OF A SINGLE CONTINUOUS ROW OF SHRUBS NO GREATER THAN 3' ON-CENTER AND WITHIN 5' OF THE PARKING LOT EDGE

CANOPY TREES PROVIDED: 19
SHRUBS PROVIDED: 71

LEGEND

EX. PROPERTY LINE
EX. RIGHT-OF-WAY
EX. ADJACENT OWNERS
EX. EASEMENT
EX. CHAIN LINK FENCE
EX. WOOD FENCE
EX. COMMUNICATIONS LINE
EX. OVERHEAD ELECTRIC LINE
EX. WATER LINE
EX. SANITARY SEWER
EX. STORM SEWER
PROP. SETBACK LINE
PROP. EASEMENT
PROP. WATER LINE
PROP. SANITARY SEWER
PROP. STORM SEWER

PROP. CANOPY TREE (UP)
PROP. CANOPY TREE (ZS)
PROP. UNDERSTORY TREE (IX)
PROP. SHRUB (BS)
PROP. SHRUB (IC)
PROP. SHRUB (IP)
PROP. LIGHT POLE

CALL 48 HOURS BEFORE YOU DIG
North Carolina 811 www.nc811.org
NORTH CAROLINA ONE-CALL CENTER
1-800-632-4949

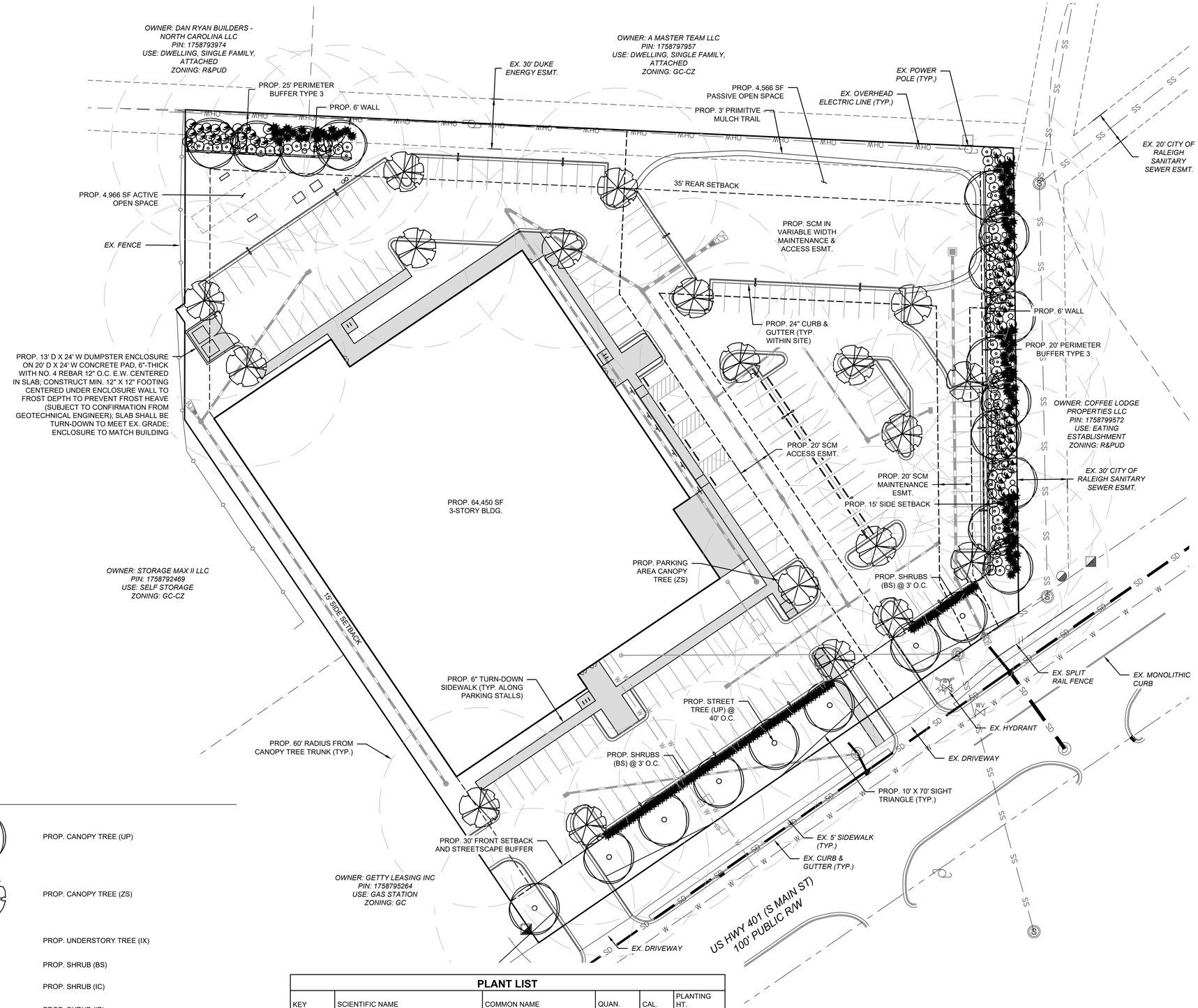

PLANT LIST

KEY	SCIENTIFIC NAME	COMMON NAME	QUAN.	CAL.	PLANTING HT.
CANOPY TREES					
UP	ULMUS PARVIFOLIA	CHINESE ELM	22	1.5"	8'
ZS	ZELKOVA SERRATA	JAPANESE ZELKOVA	19	1.5"	8'
UNDERSTORY TREES					
IX	ILEX X 'NELLIE R. STEVENS'	NELLIE R. STEVENS HOLLY	7	1"	6'
SHRUBS					
BS	BUXUS SEMPERVIRENS	TRUE DWARF BOXWOOD	151		18"
IC	ILEX CRENATA	JAPANESE HOLLY	72		18"
IP	ILLICIUM PARVIFLORUM	STAR ANISE	63		18"

CITY OF RALEIGH - PLANS AUTHORIZED FOR CONSTRUCTION

ELECTRONIC APPROVAL: THIS APPROVAL IS BEING ISSUED ELECTRONICALLY. THIS APPROVAL IS VALID ONLY UPON THE SIGNATURE OF A CITY OF RALEIGH REVIEW OFFICER BELOW. THE CITY WILL RETAIN A COPY OF THE APPROVED PLANS. ANY WORK AUTHORIZED BY THIS APPROVAL MUST PROCEED IN ACCORDANCE WITH THE PLANS KEPT ON FILE WITH THE CITY. THIS ELECTRONIC APPROVAL MAY NOT BE EDITED ONCE ISSUED. ANY MODIFICATION TO THIS APPROVAL ONCE ISSUED WILL INVALIDATE THIS APPROVAL.

CITY OF RALEIGH DEVELOPMENT APPROVAL _____
RALEIGH WATER REVIEW OFFICER

ALL CONSTRUCTION SHALL BE IN ACCORDANCE WITH ALL TOWN OF ROLESVILLE, CITY OF RALEIGH AND WAKE COUNTY STANDARDS AND SPECIFICATIONS

FLM ENGINEERING
POST OFFICE BOX 91727
RALEIGH, NORTH CAROLINA 27675
PHONE: 919.610.1051
FIRM NC LICENSE NUMBER C-4222

NORTH CAROLINA PROFESSIONAL SEAL 033775 ENGINEER JONATHAN D. FRAZIER 6/3/24

REVISION HISTORY

REV #	DESCRIPTION	DATE	BY

ORIGINAL PLAN SIZE: 24" X 36"

30 15 0 30
SCALE: 1 INCH = 30 FEET

SCALE ADJUSTMENT
THIS BAR IS 1 INCH IN LENGTH ON ORIGINAL DRAWING
0 1"
IF IT IS NOT 1 INCH ON THIS SHEET, ADJUST YOUR SCALE ACCORDINGLY

SITE CONSTRUCTION PLANS

PINE GLO
414 S MAIN ST
ROLESVILLE, NC 27571

OPTIMAL GLO LLC

DATE:	06-03-2024
SCALE:	AS SHOWN
DESIGNED BY:	FLM
APPROVED BY:	FLM
PROJECT NO.:	24028

LANDSCAPING PLAN

C-10

SHEET 10 OF 18

© 2024 THIS DRAWING SHALL NOT BE REPRODUCED IN WHOLE OR IN PART WITHOUT WRITTEN PERMISSION OF FLM ENGINEERING, INC.

LIGHTING NOTES

1. THIS SHEET IS A SITE LIGHTING CALCULATION PLAN ONLY AND DOES NOT PROVIDE ELECTRICAL CONNECTIONS FOR FIXTURES SHOWN. SITE DEVELOPERS (OWNERS, BUILDERS, AND GENERAL CONTRACTORS) ARE RESPONSIBLE FOR COORDINATING WITH ELECTRICAL CONTRACTOR OR POWER COMPANY FOR POWER CONNECTIONS FOR ALL FIXTURES.
2. ALL SITE LIGHTING SHALL CONFORM TO THE REQUIREMENTS OF THE TOWN OF ROLESVILLE LDO.
3. ALL LIGHTING FIXTURES SHALL BE CONSTRUCTED AND DESIGNED TO PREVENT LIGHT FROM EMITTING UPWARDS TOWARD THE DARK NIGHT SKY.
4. ALL FIXTURES, EXCEPT FOR STREETLIGHTING FIXTURES, INCLUDING SECURITY LIGHTING, MUST BE CUTOFF FIXTURES. CUTOFF FIXTURES SHALL PROJECT ALL ITS LIGHT IN A DOWNWARD MOTION.
5. CANOPY LIGHTING FIXTURES SHALL BE DESIGNED TO BE COMPLETELY RECESSED WITHIN THE CANOPY.
6. ALL FIXTURES MUST BE INCORPORATED INTO THE BUILDING OR SITE AS AN INTEGRATED DESIGN ELEMENT THROUGH THE USE OF COMMON OR COMPLEMENTARY STYLE, MATERIAL, AND COLOR.
7. WOOD LIGHT POLES ARE PROHIBITED IN RESIDENTIAL SUBDIVISIONS.
8. INTERIOR FIXTURES USED TO LIGHT THE INTERIOR OF PARKING GARAGES MUST BE SHIELDED TO PREVENT LIGHT SPILLING FROM THE GARAGE.
9. LIGHT FIXTURES ON THE TOP DECK OF A PARKING GARAGE MAY NOT EXCEED FIFTEEN (15) FEET IN HEIGHT AND MUST BE SHIELDED TO PREVENT LIGHT SPILLING FROM THE BOUNDARY OFTHE GARAGE DECK. ROOFTOP LIGHTING OF PARKING GARAGES MUST BE SETBACK A MINIMUM FIFTEEN (15) FEET FROM THE PERIMETER OF THE ROOFTOP PARKING STRUCTURE.
10. LIGHTING FOR PERMITTED ROOFTOP USES (SUCH AS A RESTAURANT OR LOUNGE) SHALL BE PEDESTRIAN IN SCALE AND NOT EXCEED TWELVE (12) FEET IN HEIGHT (THIS DOES NOT INCLUDE ANY FAA MANDATED LIGHTING). ROOFTOP LIGHTING FIXTURES USED FOR PERMITTED ROOFTOP USES SHALL BE LOCATED TOWARD THE CENTER OF THE ROOFTOP, AWAY FROM ITS EDGES AND NOT FACE OUTWARD. SAFETY LIGHTING MAY BE UTILIZED ALONG WALLS OR RAILS. ALL LIGHTING SHALL BE DESIGNED TO EFFECTIVELY ELIMINATE GLARE, SHIELDED TO PREVENT LIGHT SPILLING OVER THE SIDE OF THE BUILDING, AND SHALL BE TURNED OFF WHEN THE ROOFTOP AREA IS NOT IN USE.
11. WALKWAYS, BIKEWAYS, PARKS AND TRAIL LIGHTING, AND PEDESTRIAN FACILITIES SUCH AS BUILDING CONNECTIONS SHALL BE LIT AT A MAXIMUM 0.2 FC.
12. WALL PACKS ON BUILDINGS MAY BE USED AT ENTRANCES TO A BUILDING OR TO LIGHT POTENTIALLY UNSAFE AREAS. THEY SHOULD NOT BE INTENDED TO DRAW ATTENTION TO THE BUILDING OR PROVIDE GENERAL BUILDING OR SITE LIGHTING. WALL PACKS SHALL BE FULLY SHIELDED, CUTOFF TYPE FIXTURES WITH CONCEALED LIGHT SOURCES. THE LIGHTING MUST BE DIRECTED DOWNWARD.
13. LOADING/UNLOADING DOCKS SHALL ONLY BE ILLUMINATED BY FIXTURES WHICH FEATURE FULL CUTOFF DESIGN AND SHALL BE AFFIXED TO AN OUTSIDE BUILDING WALL OR POLE.
14. ALL OUTDOOR LIGHTING FIXTURES NOT MOUNTED ON BUILDINGS (I.E. GROUND BASED) SHALL BE LOCATED A MINIMUM OF TEN (10) FEET FROM A PROPERTY LINE OR RIGHT-OF-WAY LINE AND SHOULD BE NO CLOSER THAN TWO (2) FEET FROM ANY REQUIRED PERIMETER OR STREETSCAPE BUFFER. UNDERGROUNDING SERVICE IS ENCOURAGED.
15. LIGHT FIXTURES SHALL NOT EXCEED THIRTY (30) FEET IN HEIGHT IN VEHICLE USE AREAS (SUCH AS RIGHTS-OF-WAY AND PARKING AREAS). ADDITIONAL STANDARDS FOR PARKING AREAS ARE DEFINED IN LDO SECTION 6.6.J: PARKING AREA LIGHTING STANDARDS.
16. LIGHT FIXTURES SHALL BE TWELVE (12) TO FIFTEEN (15) FEET IN HEIGHT IN NONVEHICULAR PEDESTRIAN AREAS (SUCH AS SIDEWALKS).

PARKING AREA LIGHTING STANDARDS. LIGHTING IS REQUIRED WITHIN PARKING AREAS. THE HEIGHT OF LIGHT FIXTURES WITHIN A PARKING AREA SHALL COMPLY WITH THE FOLLOWING STANDARDS:

17. PARKING AREA LIGHTING FIXTURES SHALL BE REQUIRED TO STAGGER THE HEIGHTS OF LIGHT FIXTURES SO THAT THE TALLEST FIXTURES ARE IN THE CENTER OF THE PARKING LOT, AND THE LOWEST HEIGHTS ARE AT THE PERIMETER OF THE PARKING LOT.
18. LIGHT FIXTURES HEIGHT SHALL NOT EXCEED THIRTY (30) FEET WITHIN THE CENTER OF A PARKING AREA AND SHALL DECREASE HEIGHT TO TWELVE (12) TO FIFTEEN (15) FEET AT THE BOUNDARY OF THE PARKING AREA.
19. TO AVOID CONFLICT IN LAYOUT, PARKING LOT LIGHTING MUST BE COORDINATED WITH PARKING AREA LANDSCAPING.
20. LIGHTING DESIGN SHALL BE COORDINATED WITH THE LANDSCAPE PLAN TO ENSURE THAT VEGETATION GROWTH WILL NOT SUBSTANTIALLY IMPAIR THE INTENDED ILLUMINATION.

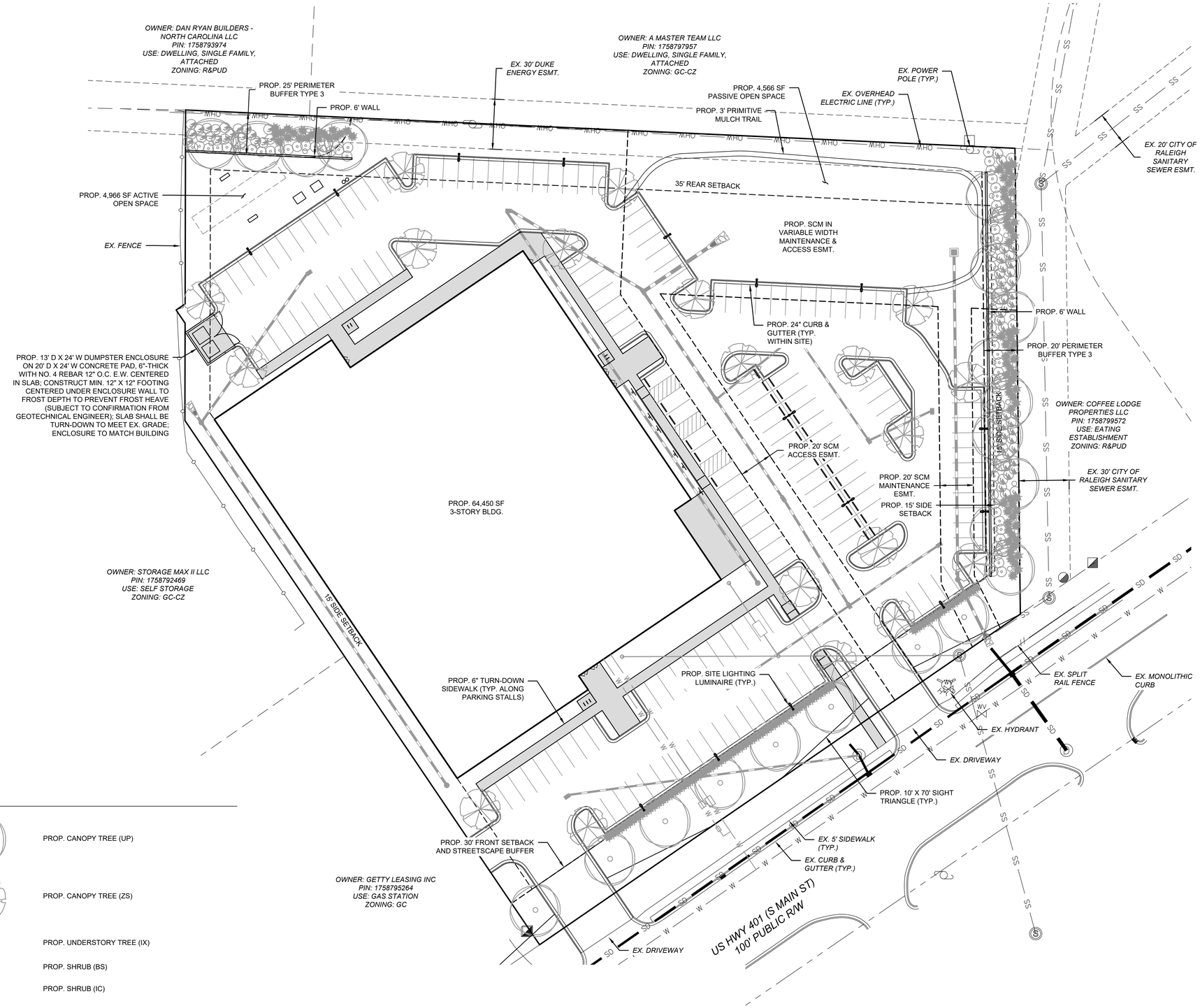

LEGEND

- EX. PROPERTY LINE
- EX. RIGHT-OF-WAY
- EX. ADJACENT OWNERS
- EX. EASEMENT
- EX. CHAIN LINK FENCE
- EX. WOOD FENCE
- EX. COMMUNICATIONS LINE
- EX. OVERHEAD ELECTRIC LINE
- EX. WATER LINE
- EX. SANITARY SEWER
- EX. STORM SEWER
- PROP. SETBACK LINE
- PROP. EASEMENT
- PROP. WATER LINE
- PROP. SANITARY SEWER
- PROP. STORM SEWER
- PROP. CANOPY TREE (UP)
- PROP. CANOPY TREE (ZS)
- PROP. UNDERSTORY TREE (IX)
- PROP. SHRUB (BS)
- PROP. SHRUB (IC)
- PROP. SHRUB (IP)
- PROP. LIGHT POLE

CALL 48 HOURS BEFORE YOU DIG

North Carolina 811 www.nc811.org

NORTH CAROLINA ONE-CALL CENTER
1-800-632-4949

LUMINAIRE SCHEDULE

SYMBOL	DESCRIPTION*	LAMP	HEIGHT (FT)**	QUANTITY
	LED 150W ROADWAY - TYPE IV - 3000K	(1) LED	VARIES	17

*APPROVED EQUALS ACCEPTED
**HEIGHT IS FROM BOTTOM OF BASE TO TOP OF FIXTURE, SEE NOTE #18

CITY OF RALEIGH - PLANS AUTHORIZED FOR CONSTRUCTION

ELECTRONIC APPROVAL: THIS APPROVAL IS BEING ISSUED ELECTRONICALLY. THIS APPROVAL IS VALID ONLY UPON THE SIGNATURE OF A CITY OF RALEIGH REVIEW OFFICER BELOW. THE CITY WILL RETAIN A COPY OF THE APPROVED PLANS. ANY WORK AUTHORIZED BY THIS APPROVAL MUST PROCEED IN ACCORDANCE WITH THE PLANS KEPT ON FILE WITH THE CITY. THIS ELECTRONIC APPROVAL MAY NOT BE EDITED ONCE ISSUED. ANY MODIFICATION TO THIS APPROVAL ONCE ISSUED WILL INVALIDATE THIS APPROVAL.

CITY OF RALEIGH DEVELOPMENT APPROVAL _____

RALEIGH WATER REVIEW OFFICER

ALL CONSTRUCTION SHALL BE IN ACCORDANCE WITH ALL TOWN OF ROLESVILLE, CITY OF RALEIGH AND WAKE COUNTY STANDARDS AND SPECIFICATIONS

FLM ENGINEERING

POST OFFICE BOX 91727
RALEIGH, NORTH CAROLINA 27675
PHONE: 919.610.1051
FIRM NC LICENSE NUMBER C-4222

NORTH CAROLINA PROFESSIONAL SEAL 033775 ENGINEER JONATHAN D. FRAZIER 6/3/24

REVISION HISTORY

REV #	DESCRIPTION	DATE	BY

ORIGINAL PLAN SIZE: 24" X 36"

30 15 0 30
SCALE: 1 INCH = 30 FEET

N

SCALE ADJUSTMENT

THIS BAR IS 1 INCH IN LENGTH ON ORIGINAL DRAWING
0 1"
IF IT IS NOT 1 INCH ON THIS SHEET, ADJUST YOUR SCALE ACCORDINGLY

SITE CONSTRUCTION PLANS

PINE GLO
414 S MAIN ST
ROLESVILLE, NC 27571

OPTIMAL GLO LLC

DATE:	06-03-2024
SCALE:	AS SHOWN
DESIGNED BY:	FLM
APPROVED BY:	FLM
PROJECT NO.:	24028

LIGHTING PLAN

C-11

SHEET 11 OF 18

© 2024 THIS DRAWING SHALL NOT BE REPRODUCED IN WHOLE OR IN PART WITHOUT WRITTEN PERMISSION OF FLM ENGINEERING, INC.

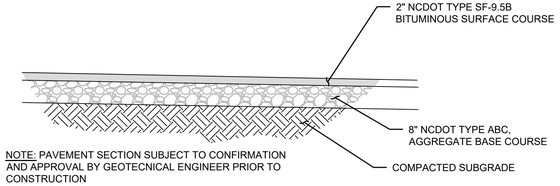

NOTE: PAVEMENT SECTION SUBJECT TO CONFIRMATION AND APPROVAL BY GEOTECNICAL ENGINEER PRIOR TO CONSTRUCTION

ASPHALT PARKING PAVEMENT SECTION

NO SCALE

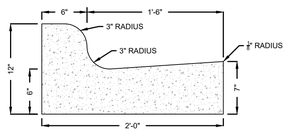

24" STANDARD CURB AND GUTTER

NOTES:

1. CONCRETE SHALL BE 3,000 PSI.
2. CONTRACTION JOINTS SHALL BE SPACED AT 10' INTERVALS OR 15' INTERVALS WHEN A MACHINE IS USED.
3. EXPANSION JOINTS SHALL BE SPACED AT 50' INTERVALS.
4. FINISH ALL CONCRETE WITH CURING COMPOUND.
5. FOLLOW ALL APPLICABLE ACI REQUIRMENTS.

CONCRETE CURB & GUTTER

NO SCALE

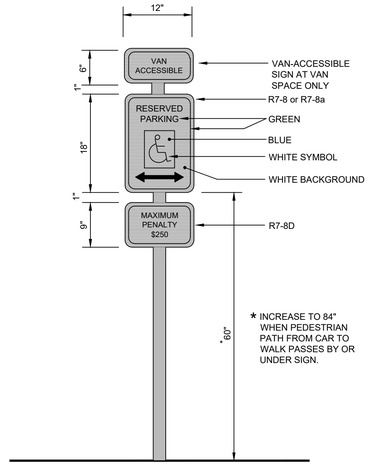

ADA SIGN AND POST

NO SCALE

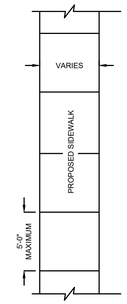

PLAN VIEW

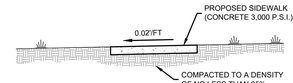

TYPICAL SECTION

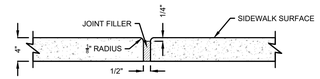

TRANSVERSE EXPANSION JOINT

NOTES:

1. TRANSVERSE EXPANSION JOINTS TO BE A MAXIMUM OF 5 FEET.
2. ALL CONCRETE TO BE FINISHED WITH CURING COMPOUND.
3. A 6 INCH DEPTH IS REQUIRED AT LOCATIONS OF DRIVEWAY CROSSINGS, AT STREET INTERSECTIONS (ALONG THE LENGTH OF RADIUS CURB RETURNS), AND IN THE HANDICAP RAMPS.

CONCRETE SIDEWALK

NO SCALE

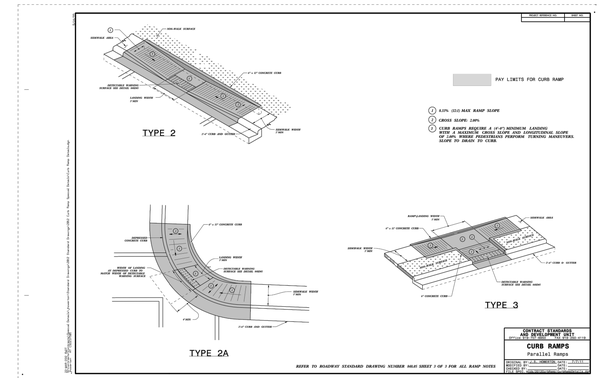

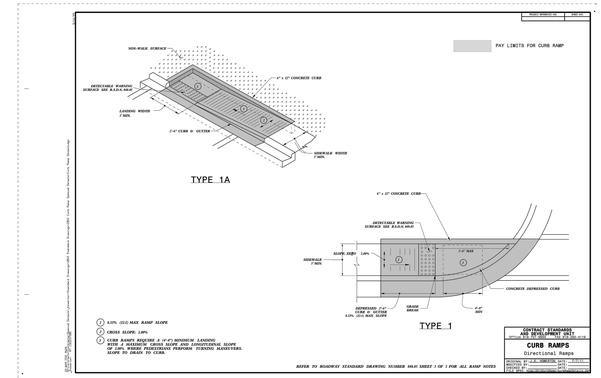

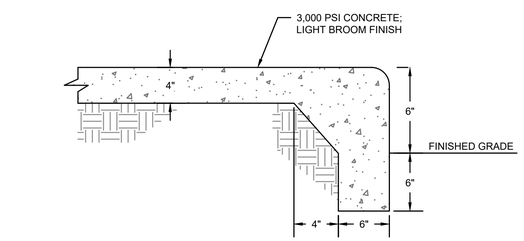

TURNDOWN SIDEWALK

NO SCALE

1-Loop Wave Style Bike Rack - 3 Bike Capacity, Black

More Images

Upscale stylish look for downtown shopping and business districts.

- For stadiums, parks and athletic fields.
- 10-gauge steel with attractive powder coating.
- 2 3/8" diameter bar.
- Mounting hardware included.

SPECIFY COLOR:

MODEL NO.	DESCRIPTION	SIZE L x W x H	BIKE CAPACITY	WT. (LBS.)	PRICE EACH 1	PRICE EACH 3+	COLOR	IN STOCK SHIPS TODAY
H-2892BL	1-Loop	22 x 2 1/2 x 34"	3	27	$230	$220	Black	1 ADD

BIKE RACK DETAIL

NO SCALE

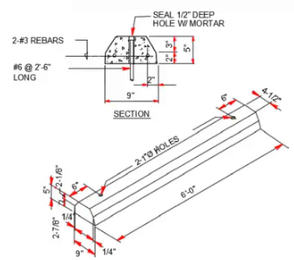

PRE-CAST CONCRETE WHEEL STOP DETAIL

NO SCALE

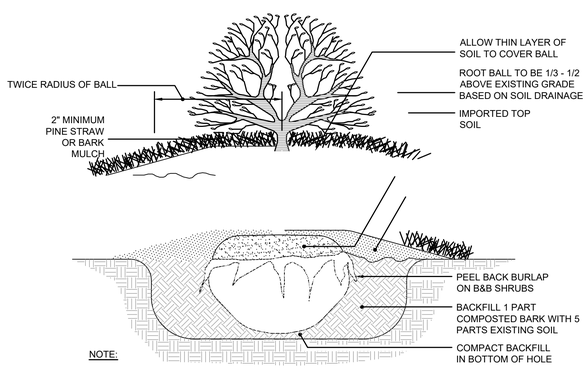

NOTE:

1. ALL SHRUB/EVERGREEN BEDS SHALL BE RAISED 6" - 8" ABOVE ADJACENT GRADE, AND TILLED WITH SOIL CONDITIONER.
2. ALL SHRUB/EVERGREEN BEDS IN PARKING ISLANDS ONLY SHALL BE RAISED 12" ABOVE ADJACENT GRADE AND TILLED WITH SOIL CONDITIONER.

TYP. SHRUB/EVERGREEN PLANTING DETAIL

NO SCALE

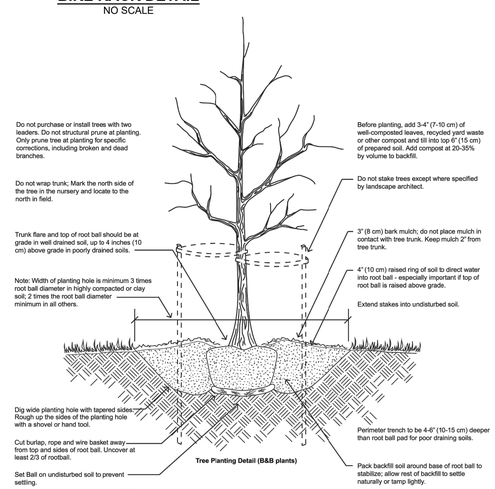

NOTES

1. Where several trees will be planted close together such that they will likely share root space, till in soil amendments to a depth of 4-6" (10-15cm) over the entire area.
2. For container grown trees, use fingers or small hand tools to pull the roots out of the outer layer of potting soil; then cut or pull apart any roots circling the perimeter of the container.
3. During the design phase, confirm that water drains out of the soil; use lowered planting hole depth and design alternative drainage system as required.
4. Thoroughly soak the tree root ball and adjacent prepared soil several times during the first month after planting and regularly throughout the following two summers.
5. The planting process is similar for deciduous and evergreen trees.

TREE PLANTING DETAIL

NO SCALE

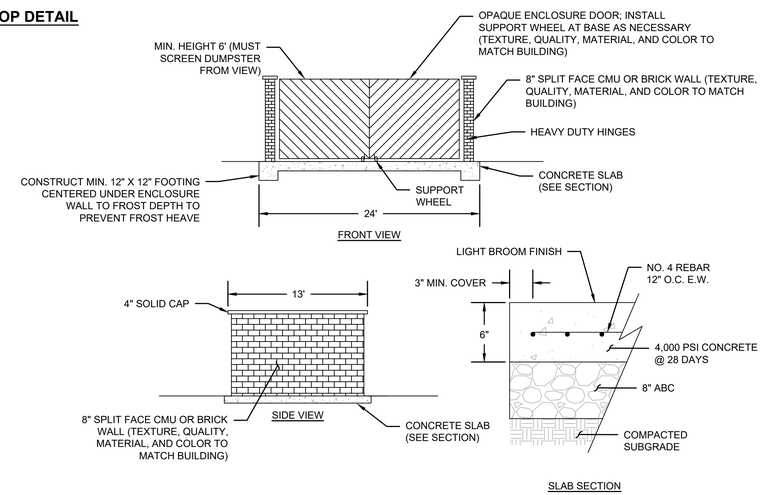

DUMPSTER SLAB AND ENCLOSURE

NO SCALE

CALL 48 HOURS BEFORE YOU DIG

North Carolina 811 www.ncs811.org

NORTH CAROLINA
ONE-CALL CENTER
1-800-632-4949

CITY OF RALEIGH - PLANS AUTHORIZED FOR CONSTRUCTION

ELECTRONIC APPROVAL: THIS APPROVAL IS BEING ISSUED ELECTRONICALLY. THIS APPROVAL IS VALID ONLY UPON THE SIGNATURE OF A CITY OF RALEIGH REVIEW OFFICER BELOW. THE CITY WILL RETAIN A COPY OF THE APPROVED PLANS. ANY WORK AUTHORIZED BY THIS APPROVAL MUST PROCEED IN ACCORDANCE WITH THE PLANS KEPT ON FILE WITH THE CITY. THIS ELECTRONIC APPROVAL MAY NOT BE EDITED ONCE ISSUED. ANY MODIFICATION TO THIS APPROVAL ONCE ISSUED WILL INVALIDATE THIS APPROVAL.

CITY OF RALEIGH DEVELOPMENT APPROVAL _____

RALEIGH WATER REVIEW OFFICER

ALL CONSTRUCTION SHALL BE IN ACCORDANCE WITH ALL TOWN OF ROLESVILLE, CITY OF RALEIGH AND WAKE COUNTY STANDARDS AND SPECIFICATIONS

© 2024 THIS DRAWING SHALL NOT BE REPRODUCED IN WHOLE OR IN PART WITHOUT WRITTEN PERMISSION OF FLM ENGINEERING, INC.

FLM ENGINEERING
POST OFFICE BOX 91727
RALEIGH, NORTH CAROLINA 27675
PHONE: 919.610.1051
FIRM NC LICENSE NUMBER C-4222

NORTH CAROLINA PROFESSIONAL SEAL 033775 ENGINEER JONATHAN D. FRAZIER 6/3/24

REVISION HISTORY

REV #	DESCRIPTION	DATE	BY

ORIGINAL PLAN SIZE: 24" X 36"

SCALE ADJUSTMENT

THIS BAR IS 1 INCH IN LENGTH ON ORIGINAL DRAWING

0 1"

IF IT IS NOT 1 INCH ON THIS SHEET, ADJUST YOUR SCALE ACCORDINGLY

SITE CONSTRUCTION PLANS

PINE GLO
414 S MAIN ST
ROLESVILLE, NC 27571

OPTIMAL GLO LLC

DATE:	06-03-2024
SCALE:	AS SHOWN
DESIGNED BY:	FLM
APPROVED BY:	FLM
PROJECT NO.:	24028

SITE DETAILS

C-12

SHEET 12 OF 18

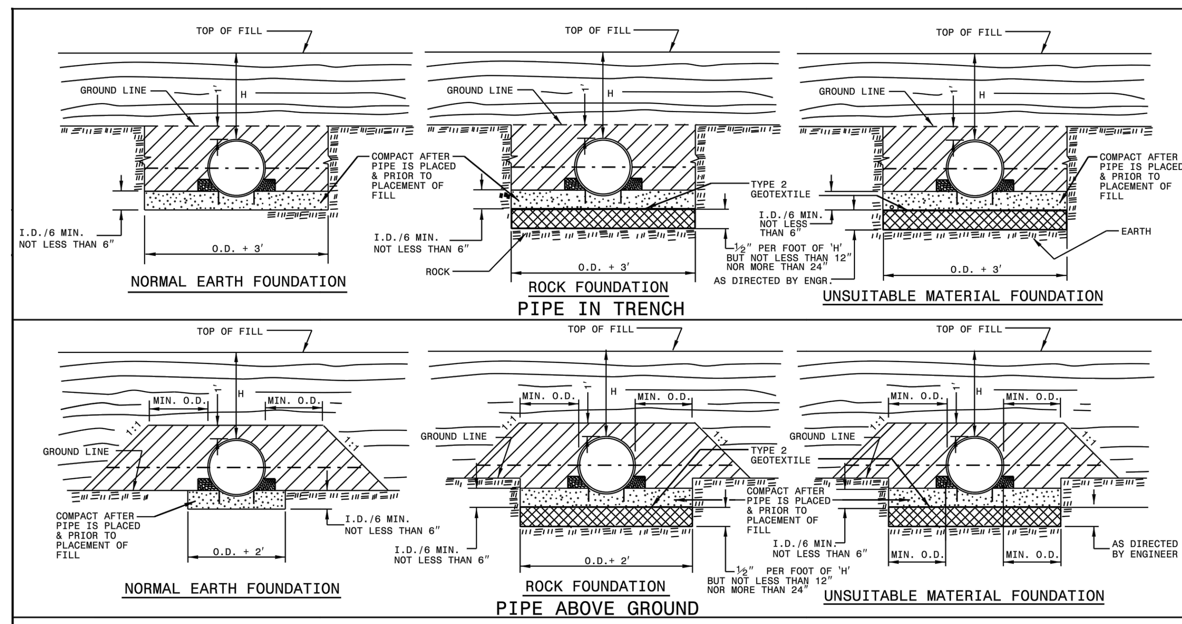

GENERAL NOTES:

I.D. = THE MAXIMUM HORIZONTAL INSIDE DIAMETER DIMENSION.

O.D. = THE MAXIMUM HORIZONTAL OUTSIDE DIAMETER DIMENSION.

H = THE FILL HEIGHT MEASURED VERTICALLY AT ANY POINT ALONG THE PIPE FROM THE TOP OF THE PIPE TO THE TOP OF THE EMBANKMENT AT THAT POINT.

TAKE CARE TO FULLY COMPACT HAUNCH ZONE OF PIPE BACKFILL.

LOOSELY PLACED SELECT MATERIAL CLASS III OR CLASS II, TYPE 1 FOR PIPE BEDDING. LEAVE SECTION DIRECTLY BENEATH PIPE UNCOMPACTED AS PIPE SEATING AND BACKFILL WILL ACCOMPLISH COMPACTION.

DO NOT OPERATE HEAVY EQUIPMENT OVER ANY PIPE CULVERT UNTIL THE PIPE CULVERT HAS BEEN PROPERLY BACKFILLED AND COVERED WITH AT LEAST 3 FEET OF APPROVED MATERIAL.

SPRINGLINE OF PIPE

SELECT BACKFILL MATERIAL CLASS III OR CLASS II, TYPE 1 ABOVE AND BELOW SPRINGLINE.

APPROVED SUITABLE LOCAL MATERIAL.

UNDISTURBED EARTH MATERIAL

SELECT MATERIAL CLASS V OR VI FOR FOUNDATION CONDITIONING. ENCAPSULATE WITH TYPE 2 GEOTEXTILE AS DIRECTED BY THE ENGINEER.

STATE OF NORTH CAROLINA DEPT. OF TRANSPORTATION DIVISION OF HIGHWAYS RALEIGH, N.C.

1-18

ROADWAY STANDARD DRAWING FOR **METHOD OF PIPE INSTALLATION** FLEXIBLE PIPE

SHEET 1 OF 3

300.01

FLEXIBLE PIPE

Round Corrugated Steel Pipe
2 2/3 x ½ corrugation **

Diameter (inches)	Minimum cover (inches)	Maximum Height of Cover (feet) (Ga) 16	14	12	10	8
12	12	204	256			
15	12	162	204			
18	12	135	169	239		
21	12	115	145	204		
24	12	100	126	178		
30	12	79	100	142		
36	12	65	83	117	152	
42	12	55	70	100	130	160
48	12	48	61	87	113	139
54	12		54	77	100	123
60	12			69	90	111
66	12				81	100
72	12				74	91
78	12					81
84	12					69

Round Corrugated Aluminum Pipe
2 2/3 x ½ corrugation **

Diameter (inches)	Minimum cover (inches)	Maximum Height of Cover (feet) (Ga) 16	14	12	10	8
12	12	123	155	218	281	344
15	12	98	123	174	224	275
18	12	81	102	144	187	228
21	12	69	87	123	160	195
24	12	60	76	108	139	171
27	12		67	95	123	151
30	12		60	85	111	136
36	12		50	71	92	113
42	12			60	78	96
48	12			52	68	84
54	12			46	50	74
60	12				50	62
66	12					51
72	12					41

** FOR DIFFERENT CORRUGATIONS AND ARCH PIPES REFER TO ROADWAY DESIGN MANUAL OR MANUFACTURERS SPECIFICATION.

HDPE - * (Minimum fill) 2' for pipe diameters ≥ 12" and ≤ 60"
* (Maximum fill) 20' for pipe diameters ≤ 24"
17' for pipe diameters ≥ 30" and ≤ 60"

PVC - * (Minimum fill) 2' for pipe diameters ≥ 12" and ≤ 36"
* (Maximum fill) 30' for pipe diameters ≥ 12" and ≤ 36"

* FILL HEIGHT IS MEASURED FROM THE TOP OF THE PIPE TO THE BOTTOM OF THE PAVEMENT STRUCTURE

REFER TO THE FOLLOWING FOR PIPE SPECIFICATIONS

CSP - AASHTO M36
CAAP - AASHTO M196
HDPE - AASHTO M294
PVC - ASTM F949 or AASHTO M304

NOTES: FILL HEIGHTS SHOWN WERE CALCULATED USING AASHTO LRFD BRIDGE DESIGN SPECIFICATIONS

1' MINIMUM COVER FOR ALL SIDE DRAIN PIPE IN ACCORDANCE WITH THE STANDARD SPECIFICATIONS

RIGID PIPE

RCP - * (Minimum fill) 1' for Class IV & CLASS V
2' for Class III & Class II

* (Maximum fill) 10' - Class II pipe
20' - Class III pipe
30' - Class IV pipe
40' - Class V pipe

(For fills > 40' & < 80' use LRFD Direct Design Method)

* FILL HEIGHT IS MEASURED FROM THE TOP OF THE PIPE TO THE BOTTOM OF THE PAVEMENT STRUCTURE

REFER TO THE FOLLOWING FOR PIPE SPECIFICATIONS

RCP - AASHTO M170

NOTES: FILL HEIGHTS SHOWN WERE CALCULATED USING AASHTO LRFD BRIDGE DESIGN SPECIFICATIONS

1' MINIMUM COVER FOR ALL SIDE DRAIN PIPE IN ACCORDANCE WITH THE STANDARD SPECIFICATIONS

STATE OF NORTH CAROLINA DEPT. OF TRANSPORTATION DIVISION OF HIGHWAYS RALEIGH, N.C.

1-18

ROADWAY STANDARD DRAWING FOR **METHOD OF PIPE INSTALLATION** FILL HEIGHT TABLES

SHEET 3 OF 3

300.01

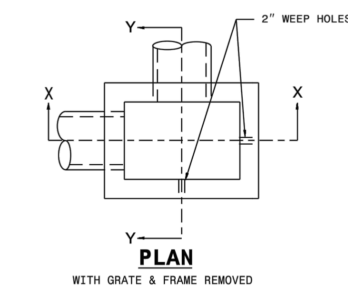

GENERAL NOTES:

USE CLASS "B" CONCRETE THROUGHOUT.

PROVIDE ALL DROP INLETS OVER 3'-6" IN DEPTH WITH STEPS 12" ON CENTER. USE STEPS WHICH COMPLY WITH STD. DRAWING 840.66.

OPTIONAL CONSTRUCTION - MONOLITHIC POUR 2" KEYWAY OR #4 BAR DOWELS AT 12" CENTERS AS DIRECTED BY THE ENGINEER.

USE FORMS FOR THE CONSTRUCTION OF THE BOTTOM SLAB.

IF REINFORCED CONCRETE PIPE IS SET IN BOTTOM SLAB OF BOX, ADD TO SLAB AS SHOWN ON STD. NO. 840.00.

CONSTRUCT WITH PIPE CROWNS MATCHING.

SEE STANDARD DRAWING 840.25 FOR ATTACHMENT OF FRAMES AND GRATES NOT SHOWN.

INSTALL 2" WEEPHOLES AS DIRECTED BY THE ENGINEER.

INSTALL STONE DRAINS, OF A MINIMUM OF 1 CUBIC FOOT OF NO. 78M STONE IN A POROUS FABRIC BAG OR WRAP, AT EACH WEEP HOLE OR AS DIRECTED BY THE ENGINEER.

CHAMFER ALL EXPOSED CORNERS 1".

DRAWING NOT TO SCALE.

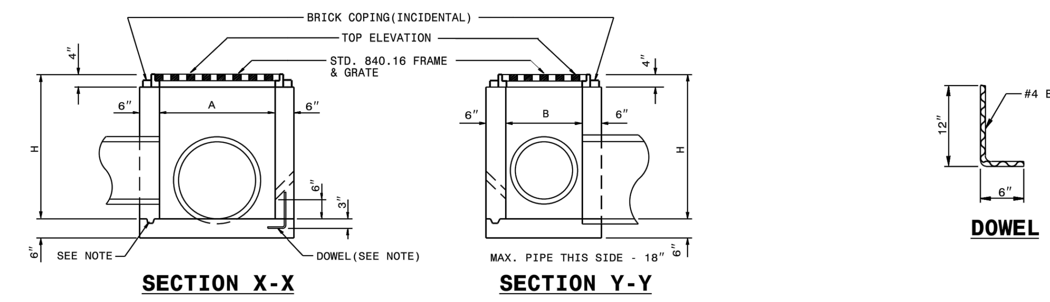

DIMENSIONS AND QUANTITIES FOR DROP INLET(BASED ON MIN. HEIGHT, H)

DIMENSIONS OF BOX & PIPE				CUBIC YARDS CONC. IN BOX			DEDUCTIONS FOR ONE PIPE	
PIPE	SPAN	WIDTH	MIN. HEIGHT	BOTTOM SLAB	WALL PER FT. HT.	TOTAL CONCRETE FOR MINIMUM HEIGHT, H	C.M.	R.C.
D	A	B	H					
12"	3'-0"	2'-0"	2'-0"	0.222	0.222	0.592	0.015	0.026
15"			2'-3"			0.648	0.023	0.036
18"			2'-6"			0.703	0.033	0.049
24"			3'-0"			0.814	0.059	0.085
30"	3'-0"	2'-0"	3'-6"	0.222	0.222	0.925	0.092	0.127

STATE OF NORTH CAROLINA DEPT. OF TRANSPORTATION DIVISION OF HIGHWAYS RALEIGH, N.C.

1-18

ROADWAY STANDARD DRAWING FOR **CONCRETE DROP INLET** 12" THRU 30" PIPE

SHEET 1 OF 1

840.14

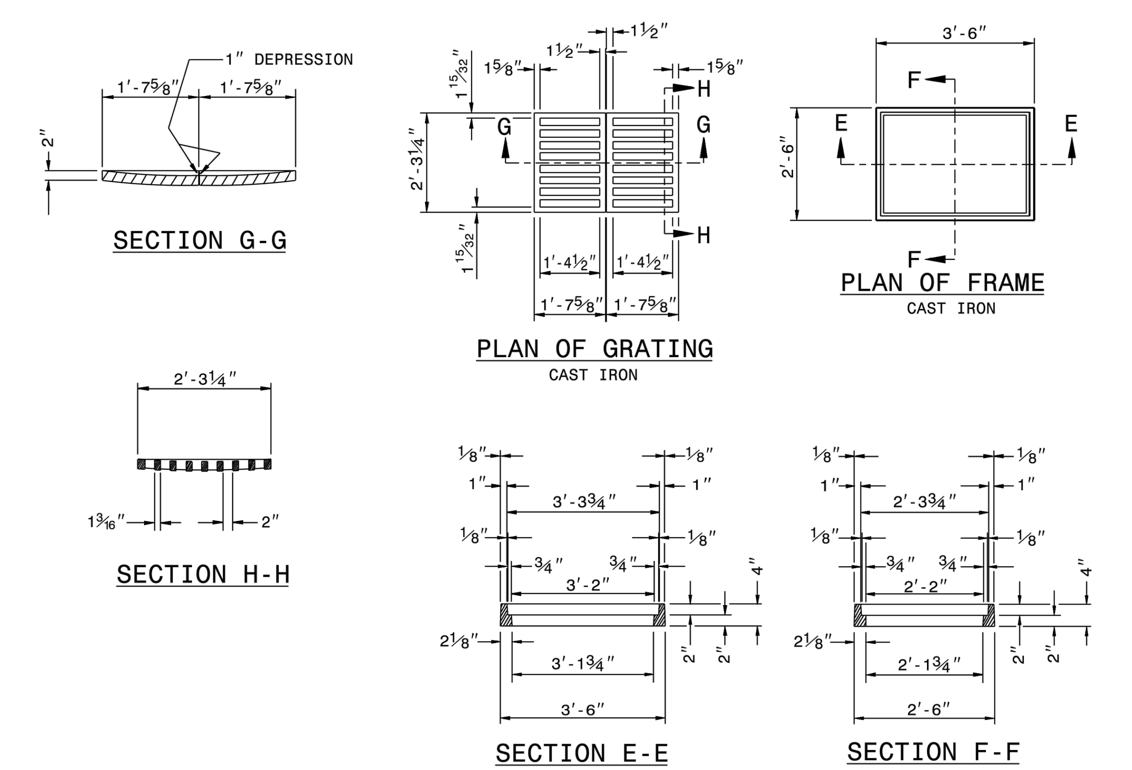

STATE OF NORTH CAROLINA DEPT. OF TRANSPORTATION DIVISION OF HIGHWAYS RALEIGH, N.C.

1-18

ROADWAY STANDARD DRAWING FOR **DROP INLET FRAME AND GRATES** FOR USE WITH STD. DWG.S 840.14 AND 840.15

SHEET 1 OF 1

840.16

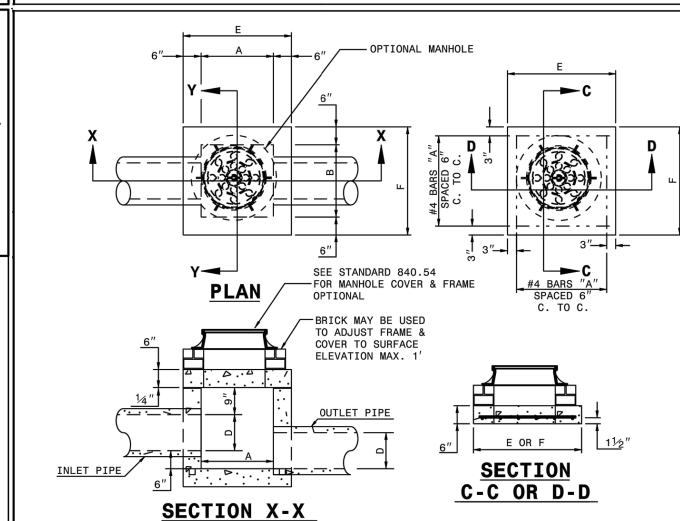

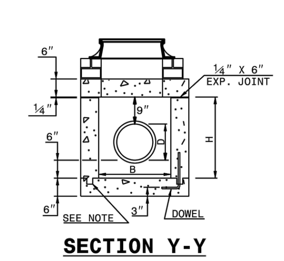

GENERAL NOTES:

CHAMFER ALL EXPOSED CORNERS 1".

USE CLASS "B" CONCRETE THROUGHOUT.

OPTIONAL CONSTRUCTION - MONOLITHIC POUR, 2" KEYWAY, OR #4 BAR DOWELS AT 12" CENTERS AS DIRECTED BY THE ENGINEER.

USE FORMS TO CONSTRUCT THE BOTTOM SLAB.

IF REINFORCED CONCRETE PIPE IS SET IN BASE SLAB OF BOX, ADD TO BASE AS SHOWN ON STANDARD NO. 840.00.

PROVIDE ALL JUNCTION BOXES OVER 3'-6" IN DEPTH WITH STEPS 12" ON CENTERS IN ACCORDANCE WITH STD. NO. 840.66.

ADJUST THE STEEL, CONCRETE AND BRICK MASONRY QUANTITIES TO INCLUDE THE ADDITION OF THE MANHOLE (I.E. DIAGONAL BARS SHORTENED AROUND OPENING IN TOP SLAB, ADDITIONAL VARIABLE HEIGHT BRICK MASONRY, OPENING IN TOP SLAB.)

MAX. DEPTH OF THIS STRUCTURE FROM TOP OF BOTTOM SLAB TO TOP ELEVATION IS 12 FEET.

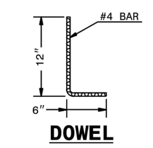

DIMENSIONS AND QUANTITIES FOR CONCRETE JUNCTION BOXES

DIMENSIONS OF BOX AND PIPE				REINFORCEMENT BARS "A"		TOP SLAB DIMENSIONS		CUBIC YARDS IN BOX			TOTAL QUANTITIES BOX AND SLABS		DEDUCTIONS FOR ONE PIPE CU.YDS.	
PIPE	SPAN	WIDTH	HEIGHT											
D	A	B	H	NO.	LENGTH	E	F	TOP SLAB	BOTTOM SLAB	WALL/ FT. OF HT.	LBS. REINF	CU. YDS. MIN. "H"	C.S.	R.C.
12"	2'-0"	2'-0"	2'-3"	12	2'-9"	3'-0"	3'-0"	0.167	0.167	0.185	22	0.750	0.015	0.024
15"	2'-3"	2'-3"	2'-6"	12	3'-0"	3'-3"	3'-3"	0.196	0.196	0.204	24	0.902	0.023	0.036
18"	2'-6"	2'-6"	2'-9"	14	3'-3"	3'-6"	3'-6"	0.227	0.227	0.222	30	1.065	0.033	0.049
24"	3'-0"	3'-0"	3'-3"	16	3'-9"	4'-0"	4'-0"	0.296	0.296	0.259	40	1.434	0.059	0.085
30"	3'-6"	3'-6"	3'-9"	18	4'-3"	4'-6"	4'-6"	0.375	0.375	0.296	51	1.860	0.092	0.127
36"	4'-0"	4'-0"	4'-3"	20	4'-9"	5'-0"	5'-0"	0.463	0.463	0.333	64	2.341	0.132	0.178
42"	4'-6"	4'-6"	4'-9"	22	5'-3"	5'-6"	5'-6"	0.560	0.560	0.370	77	2.878	0.180	0.243
48"	5'-4"	5'-4"	5'-3"	26	6'-3"	6'-4"	6'-4"	0.743	0.743	0.407	111	3.623	0.235	0.317
54"	5'-10"	5'-10"	5'-9"	28	6'-7"	6'-10"	6'-10"	0.865	0.865	0.444	126	4.283	0.297	0.401
60"	6'-6"	6'-6"	6'-3"	30	7'-3"	7'-6"	7'-6"	1.042	1.042	0.481	145	5.090	0.367	0.495
66"	7'-1"	7'-1"	6'-9"	32	7'-10"	8'-1"	8'-1"	1.210	1.210	0.518	169	5.917	0.444	0.589

STATE OF NORTH CAROLINA DEPT. OF TRANSPORTATION DIVISION OF HIGHWAYS RALEIGH, N.C.

1-18

ROADWAY STANDARD DRAWING FOR **CONCRETE JUNCTION BOX** (WITH OPTIONAL MANHOLE) 12" THRU 66" PIPE

SHEET 1 OF 1

840.31

SOLID COVER SHOWN PERFORATED. PERFORATED AVAILABLE IF SPECIFIED.
STATE USE OF SYSTEM ON COVER
(I.E.: SEWER, STORM DRAIN, ELECTRICAL)

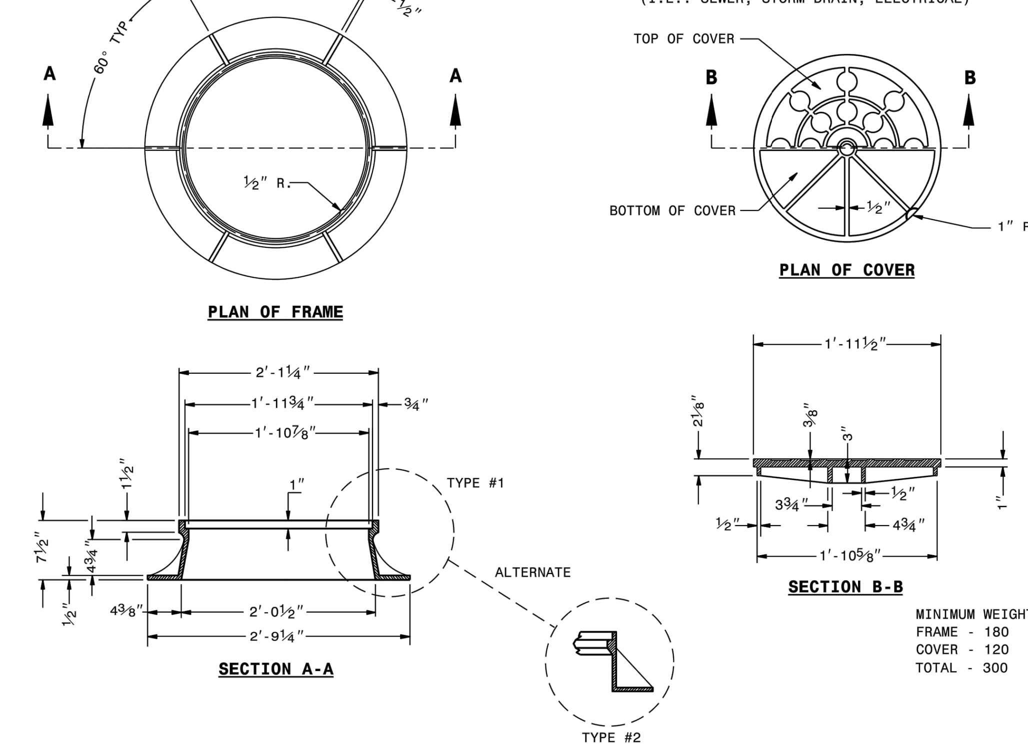

MINIMUM WEIGHTS - LBS.
FRAME - 180
COVER - 120
TOTAL - 300

STATE OF NORTH CAROLINA DEPT. OF TRANSPORTATION DIVISION OF HIGHWAYS RALEIGH, N.C.

1-18

ROADWAY STANDARD DRAWING FOR **MANHOLE FRAME AND COVER**

SHEET 1 OF 1

840.54

END SECTION DIMENSIONS

DIA.	A	B	C	D	E
15"	7"	2'-3 1/4"	3'-11 1/2"	6'-2 3/4"	2'-6"
18"	9"	2'-3"	3'-11 3/4"	6'-2 3/4"	3'-0"
24"	9"	3'-7"	3'-1"	6'-8"	3'-11 3/4"
30"	1'-0"	4'-6 1/2"	1'-10 1/2"	6'-5"	5'-0"
36"	1'-4"	5'-0"	3'-1 1/2"	8'-1 1/2"	5'-11"
42"	1'-10 1/4"	5'-1 3/8"	3'-1"	8'-2 3/8"	6'-5 1/4"

NOTES:
1. DESIGN OF END-SECTION SHALL CONFORM TO STANDARD REINFORCED SECTIONAL CONCRETE CULVERT PIPE.
2. ANY TWIN BARREL SYSTEM GREATER THAN 42" RCP REQUIRES A HEADWALL.
3. ANY SYSTEM OF MORE THAN 2 PIPES REQUIRES A HEADWALL.
4. SEE NCDOT "ROADWAY STANDARD DRAWINGS" FOR HEADWALL CONSTRUCTION DETAILS.

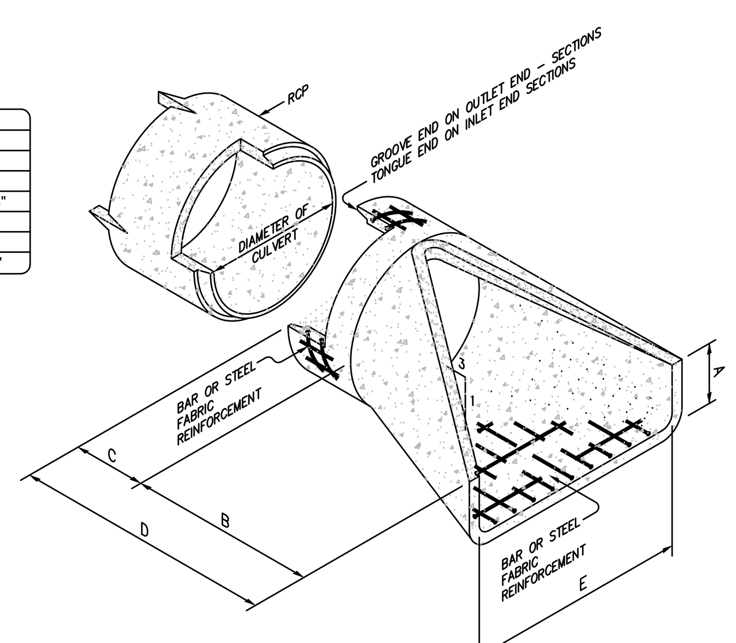

FLARED END SECTION
NO SCALE

CALL 48 HOURS BEFORE YOU DIG

NORTH CAROLINA ONE-CALL CENTER
1-800-632-4949

© 2024 THIS DRAWING SHALL NOT BE REPRODUCED IN WHOLE OR IN PART WITHOUT WRITTEN PERMISSION OF FLM ENGINEERING, INC.

CITY OF RALEIGH - PLANS AUTHORIZED FOR CONSTRUCTION

ELECTRONIC APPROVAL: THIS APPROVAL IS BEING ISSUED ELECTRONICALLY. THIS APPROVAL IS VALID ONLY UPON THE SIGNATURE OF A CITY OF RALEIGH REVIEW OFFICER BELOW. THE CITY WILL RETAIN A COPY OF THE APPROVED PLANS. ANY WORK AUTHORIZED BY THIS APPROVAL MUST PROCEED IN ACCORDANCE WITH THE PLANS KEPT ON FILE WITH THE CITY. THIS ELECTRONIC APPROVAL MAY NOT BE EDITED ONCE ISSUED. ANY MODIFICATION TO THIS APPROVAL ONCE ISSUED WILL INVALIDATE THIS APPROVAL.

CITY OF RALEIGH DEVELOPMENT APPROVAL ____________________
RALEIGH WATER REVIEW OFFICER

ALL CONSTRUCTION SHALL BE IN ACCORDANCE WITH ALL TOWN OF ROLESVILLE, CITY OF RALEIGH AND WAKE COUNTY STANDARDS AND SPECIFICATIONS

FLM ENGINEERING
POST OFFICE BOX 91727
RALEIGH, NORTH CAROLINA 27675
PHONE: 919.610.1051
FIRM NC LICENSE NUMBER C-4222

REVISION HISTORY

REV #	DESCRIPTION	DATE	BY

ORIGINAL PLAN SIZE: 24" X 36"

SCALE ADJUSTMENT
THIS BAR IS 1 INCH IN LENGTH ON ORIGINAL DRAWING
0 1"
IF IT IS NOT 1 INCH ON THIS SHEET, ADJUST YOUR SCALE ACCORDINGLY

SITE CONSTRUCTION PLANS

PINE GLO
414 S MAIN ST
ROLESVILLE, NC 27571

OPTIMAL GLO LLC

DATE:	06-03-2024
SCALE:	AS SHOWN
DESIGNED BY:	FLM
APPROVED BY:	FLM
PROJECT NO.:	24028

STORM DRAINAGE DETAILS

C-13

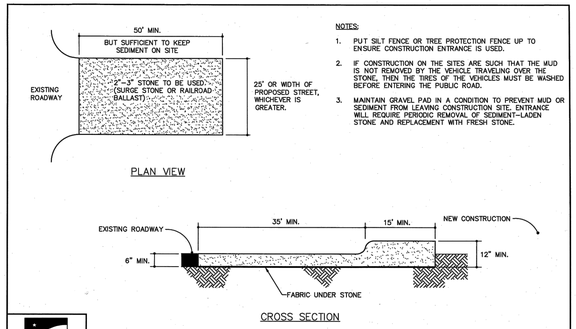

NOTES:

1. PUT SILT FENCE OR TREE PROTECTION FENCE UP TO ENSURE CONSTRUCTION ENTRANCE IS USED.
2. IF CONSTRUCTION ON THE SITES ARE SUCH THAT THE MUD IS NOT REMOVED BY THE VEHICLE TRAVELING OVER THE STONE, THEN THE TIRES OF THE VEHICLES MUST BE WASHED BEFORE ENTERING THE PUBLIC ROAD.
3. MAINTAIN GRAVEL PAD IN A CONDITION TO PREVENT MUD OR SEDIMENT FROM LEAVING CONSTRUCTION SITE. ENTRANCE WILL REQUIRE PERIODIC REMOVAL OF SEDIMENT-LADEN STONE AND REPLACEMENT WITH FRESH STONE.

WAKE COUNTY NORTH CAROLINA

EFFECTIVE: 01/31/08

STANDARD CONSTRUCTION ENTRANCE

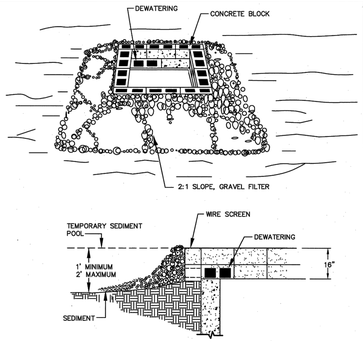

CONSTRUCTION SPECIFICATIONS

1. LAY ONE BLOCK ON EACH SIDE OF THE STRUCTURE ON ITS SIDE IN THE BOTTOM ROW TO ALLOW POOL DRAINAGE. THE FOUNDATION SHOULD BE EXCAVATED AT LEAST 2 INCHES BELOW THE CREST OF THE STORM DRAIN. PLACE THE BOTTOM ROW OF BLOCKS AGAINST THE EDGE OF THE STORM DRAIN FOR LATERAL SUPPORT AND TO AVOID WASHOUTS WHEN OVERFLOW OCCURS. IF NEEDED, GIVE LATERAL SUPPORT TO SUBSEQUENT ROWS BY PLACING 2x4 WOOD STUDS THROUGH BLOCK OPENINGS.
2. CAREFULLY FIT HARDWARE CLOTH OR COMPARABLE WIRE MESH WITH 1/2 INCH OPENINGS OVER ALL BLOCK OPENINGS TO HOLD GRAVEL IN PLACE.
3. USE CLEAN GRAVEL, 3/4 TO 1/2 INCH IN DIAMETER, PLACED 2 INCHES BELOW THE TOP OF THE BLOCK ON A 2:1 SLOPE OR FLATTER AND SMOOTH IT TO AN EVEN GRADE. DOT #57 WASHED STONE IS RECOMMENDED.

MAINTENANCE: INSPECT INLET PROTECTION AND REMOVE SEDIMENT AFTER EACH RAIN EVENT. GRAVEL SHOULD BE REPLACED AND REPAIRS MADE AS NEEDED.

WAKE COUNTY NORTH CAROLINA

EFFECTIVE: 01/31/08

STANDARD BLOCK & GRAVEL DROP INLET PROTECTION

NOTES:

1. TEMPORARY DIVERSION DITCH TO BE USED TO INTERCEPT FLOW AND/OR DIVERT TO A SEDIMENT CONTROL MEASURE OR BMP.
2. SILT SHALL BE REMOVED WHEN DITCH IS ONE-HALF FULL.
3. DITCH SHALL BE RECONSTRUCTED WHEN DAMAGED BY EQUIPMENT OR COVERED BY FILL.
4. STABILIZE DIVERSION DITCH BERM WITH TEMPORARY SEEDING, MULCH WITH TAC, AND/OR EROSION CONTROL NETTING.

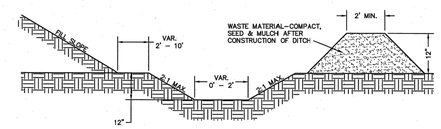

CROSS SECTIONAL VIEW

WAKE COUNTY NORTH CAROLINA

EFFECTIVE: 01/31/08

STANDARD TEMPORARY DIVERSION DITCH

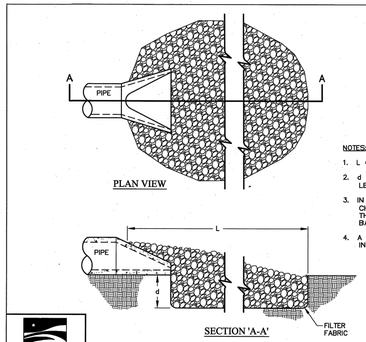

NOTES:

1. L = THE LENGTH OF THE RIPRAP APRON.
2. d = 1.5 TIMES THE MAXIMUM STONE DIAMETER BUT NOT LESS THAN 6" (INCHES).
3. IN A WELL-DEFINED CHANNEL EXTEND THE APRON UP THE CHANNEL BANKS TO AN ELEVATION OF 6" (INCHES) ABOVE THE MAXIMUM TAILWATER DEPTH OR TO THE TOP OF THE BANK, WHICHEVER IS LESS.
4. A FILTER BLANKET OR FILTER FABRIC SHOULD BE INSTALLED BETWEEN THE RIPRAP AND SOIL FOUNDATION.

WAKE COUNTY NORTH CAROLINA

EFFECTIVE: 01/31/08

STANDARD PIPE OUTLET TO WELL-DEFINED CHANNEL

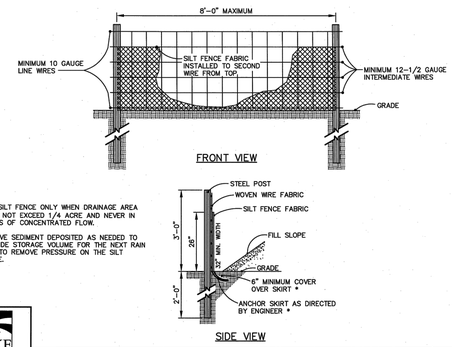

NOTE:

1. USE SILT FENCE ONLY WHEN DRAINAGE AREA DOES NOT EXCEED 1/4 ACRE AND NEVER IN AREAS OF CONCENTRATED FLOW.
2. REMOVE SEDIMENT DEPOSITED AS NEEDED TO PROVIDE STORAGE VOLUME FOR THE NEXT RAIN AND TO REMOVE PRESSURE ON THE SILT FENCE.

WAKE COUNTY NORTH CAROLINA

EFFECTIVE: 01/31/08

STANDARD TEMPORARY SILT FENCE

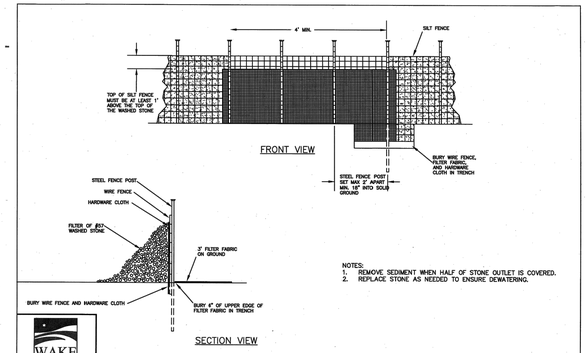

NOTES:

1. REMOVE SEDIMENT WHEN HALF OF STONE OUTLET IS COVERED.
2. REPLACE STONE AS NEEDED TO ENSURE DEWATERING.

WAKE COUNTY NORTH CAROLINA

EFFECTIVE: 01/31/08

STANDARD SILT FENCE OUTLET

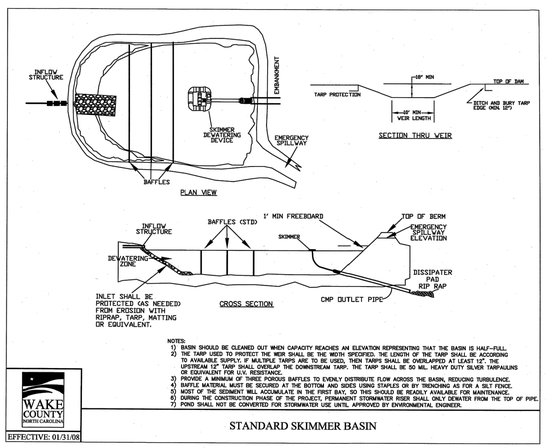

NOTES:
1) BASIN SHOULD BE CLEANED OUT WHEN CAPACITY REACHES AN ELEVATION REPRESENTING THAT THE BASIN IS HALF-FULL.
2) THE TARP USED TO PROTECT THE WEIR SHALL BE THE WIDTH SPECIFIED. THE LENGTH OF THE TARP SHALL BE ACCORDING TO AVAILABLE SUPPLY. IF MULTIPLE TARPS ARE TO BE USED, THEN TARPS SHALL BE OVERLAPPED AT LEAST 12". THE UPSTREAM 12" TARP SHALL OVERLAP THE DOWNSTREAM TARP. THE TARP SHALL BE 50 MIL. HEAVY DUTY SILVER TARP/ALUNIS OR EQUIVALENT FOR U.V. RESISTANCE.
3) PROVIDE A MINIMUM OF THREE POROUS BAFFLES TO EVENLY DISTRIBUTE FLOW ACROSS THE BASIN, REDUCING TURBULENCE.
4) BAFFLE MATERIAL MUST BE SECURED AT THE BOTTOM AND SIDES USING STAPLES OR BY TRENCHING AS FOR A SILT FENCE.
5) MOST OF THE SEDIMENT WILL ACCUMULATE IN THE FIRST BAY, SO THIS SHOULD BE READILY AVAILABLE FOR MAINTENANCE.
6) DURING THE CONSTRUCTION PHASE OF THE PROJECT, PERMANENT STORMWATER RISER SHALL ONLY DEWATER FROM THE TOP OF PIPE.
7) POND SHALL NOT BE CONVERTED FOR STORMWATER USE UNTIL APPROVED BY ENVIRONMENTAL ENGINEER.

WAKE COUNTY NORTH CAROLINA

EFFECTIVE: 01/31/08

STANDARD SKIMMER BASIN

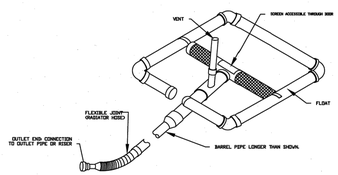

WAKE COUNTY NORTH CAROLINA

EFFECTIVE: 01/31/08

STANDARD SKIMMER DETAIL

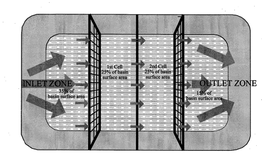

NOTES:
1. BAFFLE MATERIAL SHOULD BE SECURED AT THE BOTTOM AND SIDES USING STAPLES OR BY TRENCHING AS FOR SILT FENCE.
2. MOST OF THE SEDIMENT WILL ACCUMULATE IN THE 1ST BAY, WHICH SHOULD BE READILY ACCESSIBLE FOR MAINTENANCE.
3. PROVIDE 3 BAFFLES (USE TWO IF LESS THAN 20 FEET IN LENGTH). PROVIDE 5 BAFFLES FOR DRAINAGE AREAS GREATER THAN 10 ACRES.
4. BAFFLE SHALL BE 700 GM2 COIR EROSION BLANKET.
5. TOPS OF BAFFLES SHOULD BE 2 INCHES LOWER THAN THE TOP OF THE BERMS
6. INSPECT BAFFLES FOR REPAIR ONCE A WEEK AND AFTER EACH RAINFALL.

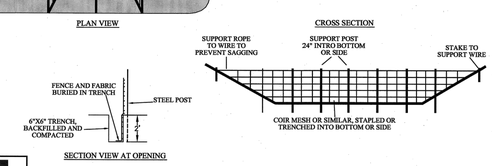

WAKE COUNTY NORTH CAROLINA

EFFECTIVE: 01/31/08

STANDARD BAFFLES DETAIL

CALL 48 HOURS BEFORE YOU DIG

North Carolina 811 www.ncc811.org

NORTH CAROLINA
ONE-CALL CENTER
1-800-632-4949

CITY OF RALEIGH - PLANS AUTHORIZED FOR CONSTRUCTION

ELECTRONIC APPROVAL: THIS APPROVAL IS BEING ISSUED ELECTRONICALLY. THIS APPROVAL IS VALID ONLY UPON THE SIGNATURE OF A CITY OF RALEIGH REVIEW OFFICER BELOW. THE CITY WILL RETAIN A COPY OF THE APPROVED PLANS. ANY WORK AUTHORIZED BY THIS APPROVAL MUST PROCEED IN ACCORDANCE WITH THE PLANS KEPT ON FILE WITH THE CITY. THIS ELECTRONIC APPROVAL MAY NOT BE EDITED ONCE ISSUED. ANY MODIFICATION TO THIS APPROVAL ONCE ISSUED WILL INVALIDATE THIS APPROVAL.

CITY OF RALEIGH DEVELOPMENT APPROVAL _____

RALEIGH WATER REVIEW OFFICER

ALL CONSTRUCTION SHALL BE IN ACCORDANCE WITH ALL TOWN OF ROLESVILLE, CITY OF RALEIGH AND WAKE COUNTY STANDARDS AND SPECIFICATIONS

© 2024 THIS DRAWING SHALL NOT BE REPRODUCED IN WHOLE OR IN PART WITHOUT WRITTEN PERMISSION OF FLM ENGINEERING, INC.

FLM ENGINEERING

POST OFFICE BOX 91727
RALEIGH, NORTH CAROLINA 27675
PHONE: 919.610.1051
FIRM NC LICENSE NUMBER C-4222

NORTH CAROLINA PROFESSIONAL SEAL 033775 ENGINEER JONATHAN D. FRAZIER 6/3/24

REVISION HISTORY

REV #	DESCRIPTION	DATE	BY

ORIGINAL PLAN SIZE: 24" X 36"

SCALE ADJUSTMENT

THIS BAR IS 1 INCH IN LENGTH ON ORIGINAL DRAWING

0 1"

IF IT IS NOT 1 INCH ON THIS SHEET, ADJUST YOUR SCALE ACCORDINGLY

SITE CONSTRUCTION PLANS

PINE GLO
414 S MAIN ST
ROLESVILLE, NC 27571

OPTIMAL GLO LLC

DATE:	06-03-2024
SCALE:	AS SHOWN
DESIGNED BY:	FLM
APPROVED BY:	FLM
PROJECT NO.:	24028

EROSION & SEDIMENT CONTROL DETAILS

C-14

SHEET 14 OF 18

FOR SHOULDERS, SIDE DITCHES, SLOPES (MAX 3:1):

DATE	TYPE	PLANTING RATE
AUG 15-NOV 1	TALL FESCUE	300 LBS/ACRE
NOV 1-MAR 1	TALL FESCUE & ABRUZZI RYE	300 LBS/ACRE
MAR 1-APR 15	TALL FESCUE	300 LBS/ACRE
APR 15-JUN 30	HULLED COMMON BERMUDAGRASS	25 LBS/ACRE
JUL 1-AUG 15	TALL FESCUE AND BROWNTOP MILLET OR SORGHUM-SUDAN HYBRIDS ***	125 LBS/ACRE (TALL FESCUE); 35 LBS/ACRE (BROWNTOP MILLET); 30 LBS/ACRE (SORGHUM-SUDAN HYBRIDS)

*** **TEMPORARY:** RESEED ACCORDING TO OPTIMUM SEASON FOR DESIRED PERMANENT VEGETATION. DO NOT ALLOW TEMPORARY COVER TO GROW MORE THAN 12' IN HEIGHT BEFORE MOWING; OTHERWISE, FESCUE MAY BE SHADED OUT.

FOR SHOULDERS, SIDE DITCHES, SLOPES (3:1 TO 2:1):

DATE	TYPE	PLANTING RATE
MAR 1 - JUN 1	SERICEA LESPEDEZA (SCARIFIED) AND USE THE FOLLOWING COMBINATIONS:	50 LBS/ACRE
MAR 1 - APR 15	ADD TALL FESCUE	120 LBS/ACRE
MAR 1 - JUN 30	OR ADD WEEPING LOVE GRASS	10 LBS/ACRE
MAR 1 - JUN 30	OR ADD HULLED COMMON BERMUDAGRASS	25 LBS/ACRE
JUN 1 - SEPT 1	TALL FESCUE AND BROWNTOP MILLET OR SORGHUM-SUDAN HYBRIDS ***	120 LBS/ACRE (TALL FESCUE); 35 LBS/ACRE (BROWNTOP MILLET); 30 LBS/ACRE (SORGHUM-SUDAN HYBRIDS)
SEPT 1 - MAR 1	SERICEA LESPEDEZA (UNHULLED - UNSCARIFIED) AND TALL FESCUE	70 LBS/ACRE (SERICEA LESPEDEZA); 120 LBS/ACRE (TALL FESCUE)
NOV 1 - MAR 1	AND ABRUZZI RYE	25 LBS/ACRE

*** **TEMPORARY:** RESEED ACCORDING TO OPTIMUM SEASON FOR DESIRED PERMANENT VEGETATION. DO NOT ALLOW TEMPORARY COVER TO GROW MORE THAN 12' IN HEIGHT BEFORE MOWING; OTHERWISE, FESCUE MAY BE SHADED OUT.

MIXTURE	
AGRICULTURAL LIMESTONE	2 TONS/ACRE (3 TONS/ACRE IN CLAY SOILS)
FERTILIZER	1,000 LBS/ACRE - 10-10-10
SUPERPHOSPHATE	500 LBS/ACRE - 20% ANALYSIS
MULCH	2 TONS/ACRE - SMALL GRAIN STRAW
ANCHOR	ASPHALT EMULSION AT 300 GALS/ACRE

SEEDBED PREPARATION:

1. CHISEL COMPACTED AREAS AND SPREAD TOPSOIL THREE INCHES DEEP OVER ADVERSE SOIL CONDITIONS, IF AVAILABLE.
2. RIP THE ENTIRE AREA TO SIX INCHES DEEP.
3. REMOVE ALL LOOSE ROCK, ROOTS, AND OTHER OBSTRUCTIONS LEAVING SURFACE REASONABLY SMOOTH AND UNIFORM.
4. APPLY AGRICULTURAL LIME, FERTILIZER AN SUPERPHOSPHATE UNIFORMLY AND MIX WITH SOIL (*SEE BELOW).
5. CONTINUE TILLAGE UNTIL A WELL-PULVERIZED, FIRM REASONABLY UNIFORM SEEDBED IS PREPARED FOUR TO SIX INCHES DEEP.
6. SEED ON A FRESHLY PREPARED SEEDBED AND COVER SEED LIGHTLY WITH SEEDING EQUIPMENT OR CULTIPACK AFTER SEEDING.
7. MULCH IMMEDIATELY AFTER SEEDING AND ANCHOR MULCH.
8. INSPECT ALL SEEDED AREAS AND MAKE NECESSARY REPAIRS OR RESEEDINGS WITHIN THE PLANTING SEASON, IF POSSIBLE. IF STAND SHOULD BE OVER 60% DAMAGED, RE-ESTABLISH FOLLOWING THE ORIGINAL LIME, FERTILIZER AND SEEDING RATES.

*APPLY: AGRICULTURAL LIMESTONE- 2 TONS/ACRE MINIMUM OR PER SOIL TEST

FERTILIZER - 10-10-10 ANALYSIS @ 900 LBS/ACRE
SUPERPHOSPHATE - 500 LBS/ACRE OF 20% ANALYSIS
MULCH - 2 TONS (+/- 80 BALES) STRAW/ACRE
ANCHOR - USE LIQUID ASPHALT @ 400 GALS/ACRE
OR EMULSIFIED ASPHALT @ 300 GALS/ACRE

PERMANENT SEEDING SCHEDULE
NO SCALE

FOR LATE WINTER AND EARLY SPRING:

SEEDING MIXTURE:
RYE (GRAIN) - 120 LB/ACRE
ANNUAL LESPEDEZA* (KOBE IN PIEDMONT AND COASTAL PLAIN, KOREAN IN MOUNTAINS) - 50 LB/ACRE

*OMIT ANNUAL LESPEDEZA WHEN DURATION OF TEMPORARY COVER IS NOT TO EXTEND BEYOND JUNE

SEEDING DATES:
MOUNTAINS: ABOVE 2500 FEET: FEB. 15 - MAY 15
BELOW 2500 FEET: FEB. 1 - MAY 1
PIEDMONT: JAN. 1 - MAY 1
COASTAL PLAIN: DEC. 1 - APR. 15

SOIL AMENDMENTS:
FOLLOW RECOMMENDATIONS OF SOIL TESTS OR APPLY 2,000 LB/ACRE GROUND AGRICULTURAL LIMESTONE AND 750 LB/ACRE 10-10-10 FERTILIZER

MULCH:
APPLY 4,000 LB/ACRE STRAW. ANCHOR STRAW BY TACKING WITH ASPHALT, NETTING, OR A MULCH ANCHORING TOOL. A DISK WITH BLADES SET NEARLY STRAIGHT CAN BE USED AS A MULCH ANCHORING TOOL

MAINTENANCE:
REFERTILIZE IF GROWTH IS NOT FULLY ADEQUATE. RESEED, REFERTILIZE, AND MULCH IMMEDIATELY FOLLOWING EROSION OR OTHER DAMAGE

FOR SUMMER:

SEEDING MIXTURE:
GERMAN MILLET* - 40 LB/ACRE

*IN THE PIEDMONT AND MOUNTAINS, A SMALL-STEMMED SUDANGRASS MAY BE SUBSTITUTED AT A RATE OF 50 LB/ACRE

SEEDING DATES:
MOUNTAINS: MAY 15 - AUG. 15
PIEDMONT: MAY 1 - AUG. 15
COASTAL PLAIN: APR. 15 - AUG. 15

SOIL AMENDMENTS:
FOLLOW RECOMMENDATIONS OF SOIL TESTS OR APPLY 2,000 LB/ACRE GROUND AGRICULTURAL LIMESTONE AND 750 LB/ACRE 10-10-10 FERTILIZER

MULCH:
APPLY 4,000 LB/ACRE STRAW. ANCHOR STRAW BY TACKING WITH ASPHALT, NETTING, OR A MULCH ANCHORING TOOL. A DISK WITH BLADES SET NEARLY STRAIGHT CAN BE USED AS A MULCH ANCHORING TOOL

MAINTENANCE:
REFERTILIZE IF GROWTH IS NOT FULLY ADEQUATE. RESEED, REFERTILIZE, AND MULCH IMMEDIATELY FOLLOWING EROSION OR OTHER DAMAGE

FOR FALL:

SEEDING MIXTURE:
RYE (GRAIN) - 120 LB/ACRE

SEEDING DATES:
MOUNTAINS: AUG. 15 - DEC. 15
COASTAL PLAIN AND PIEDMONT: AUG. 15 - DEC. 30

SOIL AMENDMENTS:
FOLLOW RECOMMENDATIONS OF SOIL TESTS OR APPLY 2,000 LB/ACRE GROUND AGRICULTURAL LIMESTONE AND 1,000 LB/ACRE 10-10-10 FERTILIZER

MULCH:
APPLY 4,000 LB/ACRE STRAW. ANCHOR STRAW BY TACKING WITH ASPHALT, NETTING, OR A MULCH ANCHORING TOOL. A DISK WITH BLADES SET NEARLY STRAIGHT CAN BE USED AS A MULCH ANCHORING TOOL

MAINTENANCE:
REPAIR AND REFERTILIZE DAMAGED AREAS IMMEDIATELY. TOPDRESS WITH 50 LB/ACRE OF NITROGEN IN MARCH. IF IT IS NECESSARY TO EXTEND TEMPORARY COVER BEYOND JUNE 15, OVERSEED WITH 50 LB/ACRE KOBE (PIEDMONT AND COASTAL PLAIN) OR KOREAN (MOUNTAINS) LESPEDEZA IN LATE FEBRUARY OR EARLY MARCH.

SEEDBED PREPARATION:

LIMING - APPLY LIME ACCORDING TO SOIL TEST RECOMMENDATIONS. IF THE PH (ACIDITY) OF THE SOIL IS NOT KNOWN, AN APPLICATION OF GROUND AGRICULTURAL LIMESTONE AT THE 6.106 RATE OF 1 TO 1 1/2 TONS/ACRE ON COARSE-TEXTURED SOILS AND 2-3 TONS/ACRE ON FINETEXTURED SOILS IS USUALLY SUFFICIENT. APPLY LIMESTONE UNIFORMLY AND INCORPORATE INTO THE TOP 4-6 INCHES OF SOIL. SOILS WITH A PH OF 6 OR HIGHER NEED NOT BE LIMED.

FERTILIZER - BASE APPLICATION RATES ON SOIL TESTS. WHEN THESE ARE NOT POSSIBLE, APPLY A 10-10-10 GRADE FERTILIZER AT 700-1,000 LB/ACRE. BOTH FERTILIZER AND LIME SHOULD BE INCORPORATED INTO THE TOP 4-6 INCHES OF SOIL. IF A HYDRAULIC SEEDER IS USED, DO NOT MIX SEED AND FERTILIZER MORE THAN 30 MINUTES BEFORE APPLICATION.

SURFACE ROUGHENING - IF RECENT TILLAGE OPERATIONS HAVE RESULTED IN A LOOSE SURFACE, ADDITIONAL ROUGHENING MAY NOT BE REQUIRED, EXCEPT TO BREAK UP LARGE CLODS. IF RAINFALL CAUSES THE SURFACE TO BECOME SEALED OR CRUSTED, LOOSEN IT JUST PRIOR TO SEEDING BY DISKING, RAKING, HARROWING, OR OTHER SUITABLE METHODS. GROOVE OR FURROW SLOPES STEEPER THAN 3:1 ON THE CONTOUR BEFORE SEEDING (PRACTICE 6.03, SURFACE ROUGHENING).

TEMPORARY SEEDING SCHEDULE
NO SCALE

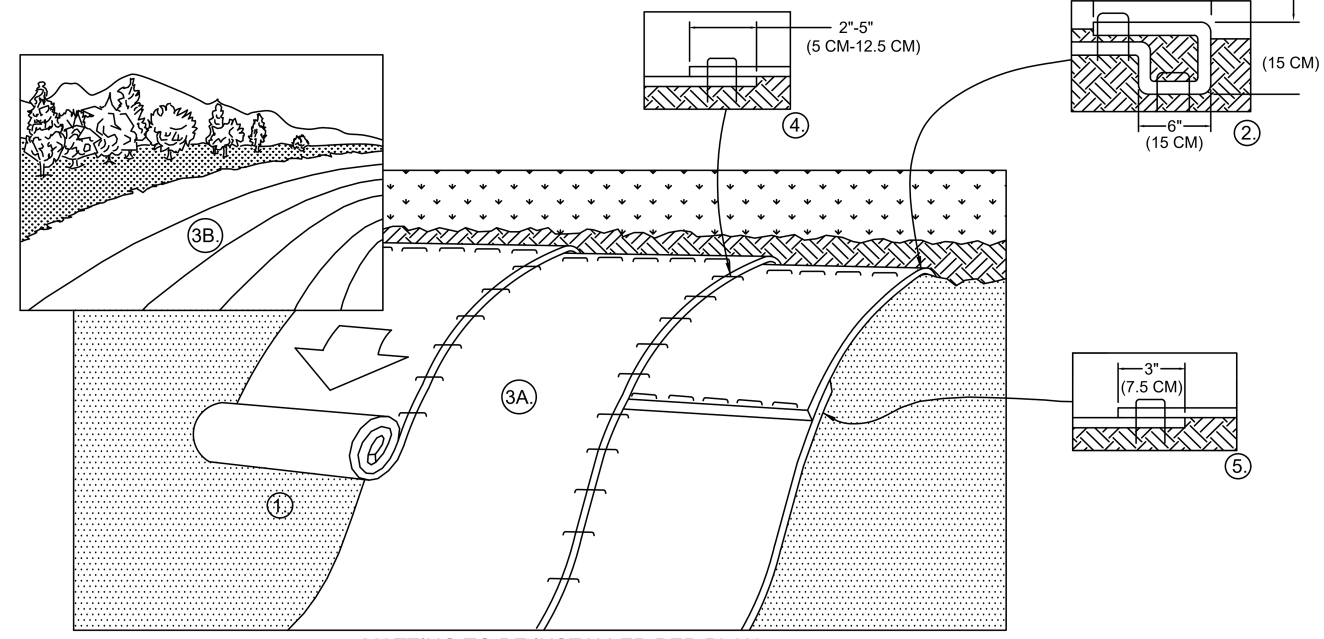

MATTING TO BE INSTALLED PER PLAN

NOTES:

1. PREPARE SOIL BEFORE INSTALLING BLANKETS, INCLUDING ANY NECESSARY APPLICATION OF LIME, FERTILIZER, AND SEED. NOTE: WHEN USING CELL-O-SEED DO NOT SEED PREPARED AREA. CELL-O-SEED MUST BE INSTALLED WITH PAPER SIDE DOWN.
2. BEGIN AT THE TOP OF THE SLOPE BY ANCHORING THE BLANKET IN A 6" (15 CM) DEEP X 6" (15 CM) WIDE TRENCH WITH APPROXIMATELY 12" (30cm) OF BLANKET EXTENDED BEYOND THE UP-SLOPE PORTION OF THE TRENCH. ANCHOR THE BLANKET WITH A ROW OF STAPLES/STAKES APPROXIMATELY 12" (30 CM) APART IN THE BOTTOM OF THE TRENCH. BACKFILL AND COMPACT THE TRENCH AFTER STAPLING. APPLY SEED TO COMPACTED SOIL AND FOLD REMAINING 12" (30 CM) PORTION OF BLANKET BACK OVER SEED AND COMPACTED SOIL. SECURE BLANKET OVER COMPACTED SOIL WITH A ROW OF STAPLES/STAKES SPACED APPROXIMATELY 12" (30 CM) APART ACROSS THE WIDTH OF THE BLANKET.
3. ROLL THE BLANKETS (A.) DOWN OR (B.) HORIZONTALLY ACROSS THE SLOPE. BLANKETS WILL UNROLL WITH APPROPRIATE SIDE AGAINST THE SOIL SURFACE. ALL BLANKETS MUST BE SECURELY FASTENED TO SOIL SURFACE BY PLACING STAPLES/STAKES IN APPROPRIATE LOCATIONS AS SHOWN IN THE STAPLE PATTERN GUIDE. WHEN USING THE DOT SYSTEM , STAPLES/STAKES SHOULD BE PLACED THROUGH EACH OF THE COLORED DOTS CORRESPONDING TO THE APPROPRIATE STAPLE PATTERN.
4. THE EDGES OF PARALLEL BLANKETS MUST BE STAPLED WITH APPROXIMATELY 2" - 5" (5 CM - 12.5 CM) OVERLAP DEPENDING ON BLANKET TYPE.
5. CONSECUTIVE BLANKETS SPLICED DOWN THE SLOPE MUST BE PLACED END OVER END (SHINGLE STYLE) WITH AN APPROXIMATE 3" (7.5 CM) OVERLAP. STAPLE THROUGH OVERLAPPED AREA, APPROXIMATELY 12" (30 CM) APART ACROSS ENTIRE BLANKET WIDTH. NOTE: *IN LOOSE SOIL CONDITIONS, THE USE OF STAPLE OR STAKE LENGTHS GREATER THAN 6" (15 CM) MAY BE NECESSARY TO PROPERLY SECURE THE BLANKETS.

DETAIL AND LANGUAGE PROVIDED BY NORTH AMERICAN GREEN REV. 1/2004

SLOPE INSTALLATION
NO SCALE

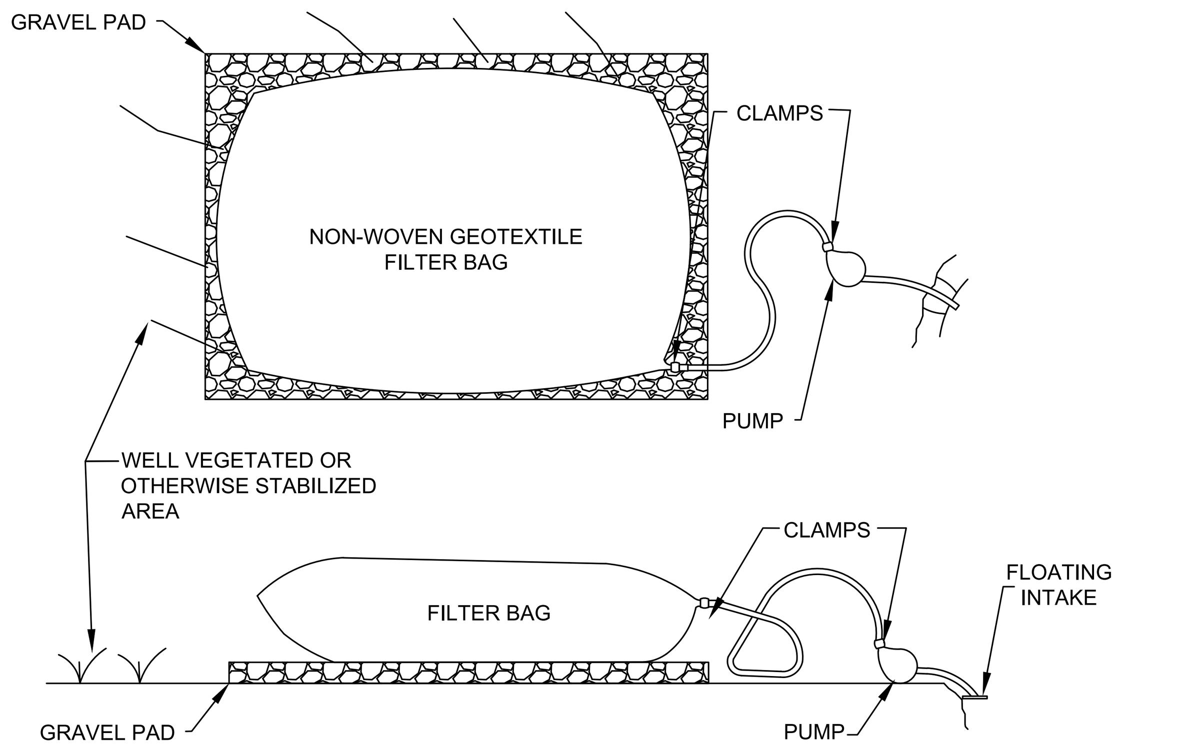

FILTER BAGS MAY BE USED TO FILTER WATER PUMPED FROM EXCAVATIONS PRIOR TO DISCHARGING.

FILTER BAGS SHALL BE MADE FROM NON-WOVEN GEOTEXTILE MATERIAL SEWN WITH HIGH STRENGTH, DOUBLE STITCHED "J" TYPE SEAMS. THEY SHALL BE CAPABLE OF TRAPPING PARTICLES LARGER THAN 150 MICRONS.

THE PUMPING RATE SHALL BE NO GREATER THAN 750 GPM OR ½ THE MAXIMUM SPECIFIED BY THE MANUFACTURER, WHICHEVER IS LESS. PUMP INTAKES SHOULD BE FLOATING AND SCREENED.

FILTER BAGS SHALL BE LOCATED IN WELL-VEGETATED (GRASSY) AREAS AND DISCHARGED ONTO STABLE, EROSION RESISTANT AREAS. WHERE THIS IS NOT POSSIBLE, A GEOTEXTILE FLOW PATH SHALL BE PROVIDED. BAGS SHALL NOT BE PLACED ON SLOPES GREATER THAN 5%.

THE PUMP DISCHARGE HOSE SHALL BE INSERTED INTO THE FILTER BAG IN THE MANNER SPECIFIED BY THE MANUFACTURER AND SECURELY CLAMPED.

A SUITABLE MEANS OF ACCESSING THE BAG WITH MACHINERY REQUIRED FOR DISPOSAL PURPOSES MUST BE PROVIDED. FILTER BAGS SHALL BE REPLACED WHEN THEY BECOME ½ FULL. SPARE REPLACEMENT BAGS SHALL BE KEPT AVAILABLE FOR REPLACEMENT OF THOSE THAT HAVE FAILED OR ARE ½ FULL.

FILTER BAGS SHALL BE INSPECTED DAILY. IF ANY PROBLEM IS DETECTED, PUMPING SHALL CEASE IMMEDIATELY AND NOT RESUME UNTIL THE PROBLEM IS CORRECTED.

SILT BAG
NO SCALE

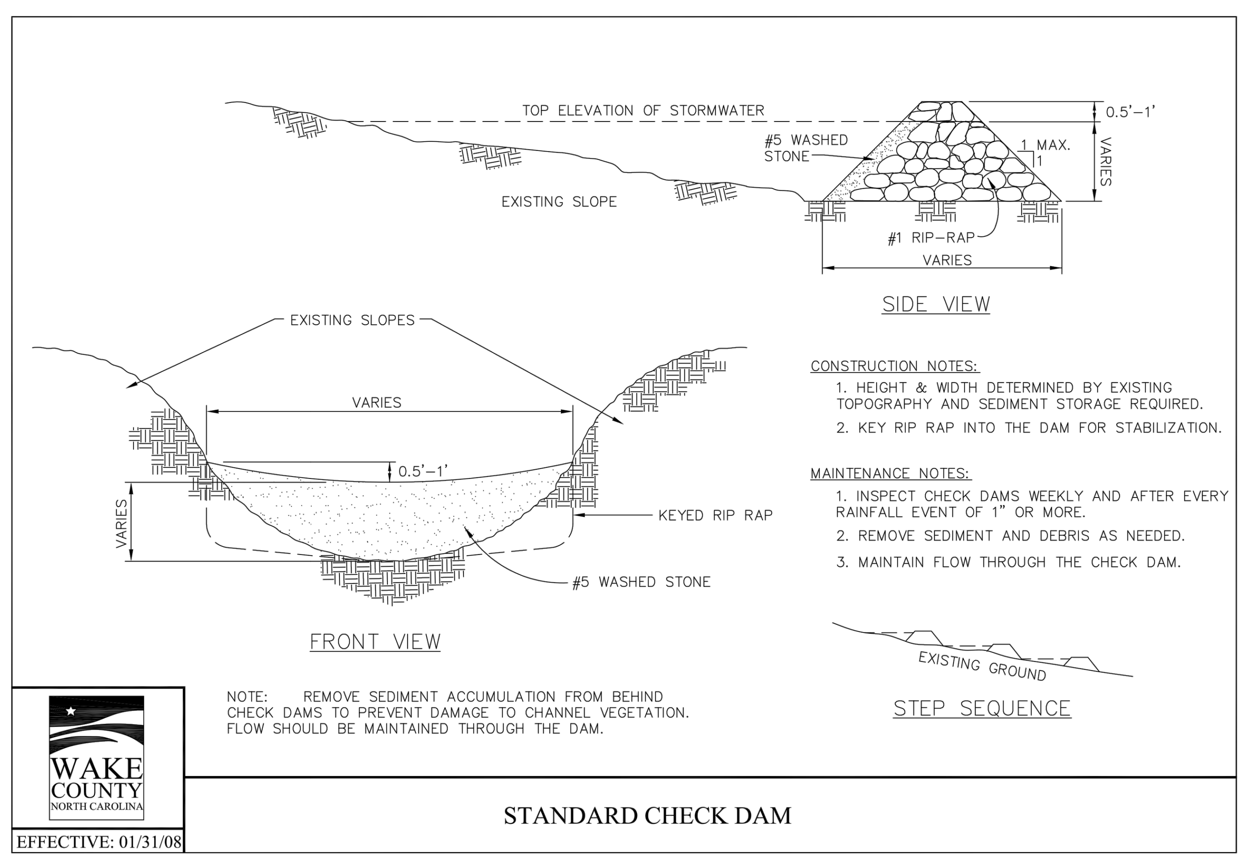

STANDARD CHECK DAM

ROLLMAX™
ROLLED EROSION CONTROL

Specification Sheet – EroNet™ S75® Erosion Control Blanket

DESCRIPTION

The short-term single net erosion control blanket shall be a machine-produced mat of 100% agricultural straw with a functional longevity of up to 12 months. (NOTE: functional longevity may vary depending upon climatic conditions, soil, geographical location, and elevation). The blanket shall be of consistent thickness with the straw evenly distributed over the entire area of the mat. The blanket shall be covered on the top side with a lightweight photodegradable polypropylene netting having an approximate 0.50 x 0.50 in. (1.27 x 1.27 cm) mesh. The blanket shall be sewn together on 1.50 inch (3.81 cm) centers with degradable thread. The blanket shall be manufactured with a colored thread stitched along both outer edges (approximately 2-5 inches [5-12.5 cm] from the edge) as an overlap guide for adjacent mats.

The S75 shall meet Type 2.C specification requirements established by the Erosion Control Technology Council (ECTC) and Federal Highway Administration's (FHWA) FP-03 Section 713.17

Index Property	Test Method	Typical
Thickness	ASTM D6525	0.50 in. (12.7 mm)
Resiliency	ECTC Guidelines	78.8%
Water Absorbency	ASTM D1117	301%
Mass/Unit Area	ASTM D6475	9.76 oz/sy (332 g/sm)
Swell	ECTC Guidelines	15%
Smolder Resistance	ECTC Guidelines	Yes
Stiffness	ASTM D1388	6.31 oz-in
Light Penetration	ASTM D6567	6.0%
Tensile Strength - MD	ASTM D6818	122.4 lbs/ft (1.81 kN/m)
Elongation - MD	ASTM D6818	36.1%
Tensile Strength - TD	ASTM D6818	79.2 lbs/ft (1.17 kN/m)
Elongation - TD	ASTM D6818	26.8%
Biomass Improvement	ASTM D7322	301%

Material Content		
Matrix	100% Straw Fiber	0.5 lbs/sq yd (0.27 kg/sm)
Netting	Top side only, lightweight photodegradable	1.5 lb/1000 sq ft (0.73 kg/100 sm)
Thread	Degradable	

Standard Roll Sizes			
Width	6.67 ft (2.03 m)	8.0 ft (2.4 m)	16 ft (4.87 m)
Length	108 ft (32.92 m)	112 ft (34.14 m)	108 ft (32.92 m)
Weight ± 10%	40 lbs (18.14 kg)	50 lbs (22.68 kg)	96 lbs (43.54 kg)
Area	80 sq yd (66.9 sm)	100 sq yd (83.61 sm)	192 sq yd (165.5 sm)

Design Permissible Shear Stress	
Unvegetated Shear Stress	1.55 psf (74 Pa)
Unvegetated Velocity	5.00 fps (1.52 m/s)

Slope Design Data: C Factors			
	Slope Gradients (S)		
Slope Length (L)	≤ 3:1	3:1 – 2:1	≥ 2:1
≤ 20 ft (6 m)	0.029	N/A	N/A
20-50 ft	0.11	N/A	N/A
≥ 50 ft (15.2 m)	0.19	N/A	N/A

NTPEP Large-Scale Slope Testing
ASTM D6459 - C-factor = 0.012

Roughness Coefficients – Unveg.	
Flow Depth	Manning's n
≤ 0.50 ft (0.15 m)	0.055
0.50 – 2.0 ft	0.055-0.021
≥ 2.0 ft (0.60 m)	0.021

Tensar.
NORTH AMERICAN GREEN®

Tensar International Corporation
2500 Northwinds Parkway
Suite 500
Alpharetta, GA 30009
800-TENSAR-1
tensarcorp.com

Tensar International Corporation warrants that at the time of delivery the product furnished hereunder shall conform to the specification stated herein. Any other warranty including merchantability and fitness for a particular purpose, are hereby executed. If the product does not meet specifications on this page and Tensar is notified prior to installation, Tensar will replace the product at no cost to the customer. **This product specification supersedes all prior specifications for the product described above and is not applicable to any products shipped prior to January 1, 2012.**
©2013, Tensar International Corporation

EC_RMX_MPDS_ES75_6.13

SLOPE MATTING
NO SCALE

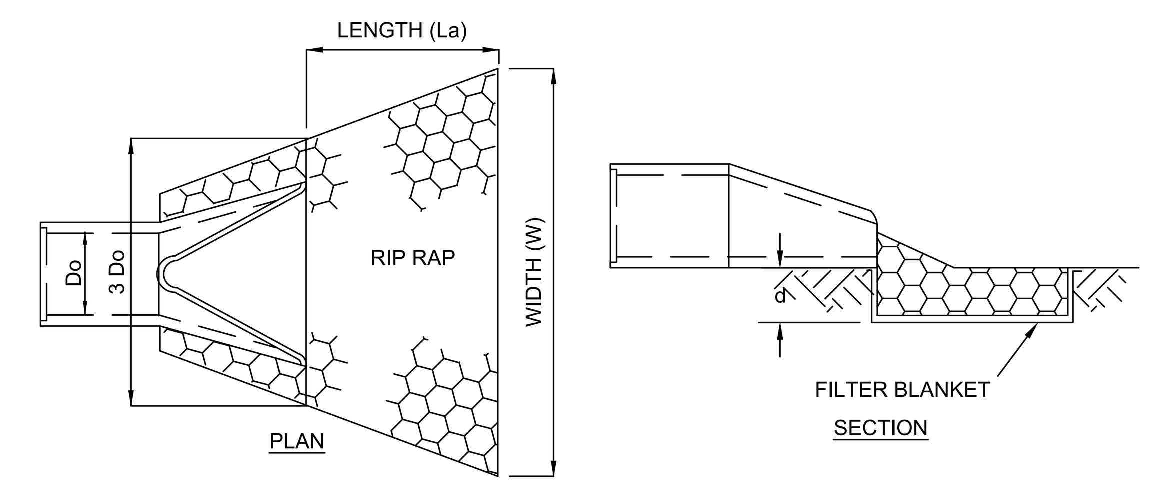

MAINTENANCE:

INSPECT PIPE INLET PROTECTION AT LEAST WEEKLY AND AFTER EACH SIGNIFICANT (1/2 INCH OR GREATER) RAINFALL EVENT TO SEE IF ANY EROSION AROUND OR BELOW THE RIPRAP HAS TAKEN PLACE, OR IF THE STONES HAVE BEEN DISLODGED. IMMEDIATELY MAKE ALL NEEDED REPAIRS TO PREVENT FURTHER DAMAGE.

OUTLET	Do	3Do	La	W	RIP RAP	d
FES-5	18"	4.5'	6'	4.5'	CLASS A RIPRAP	9"
FES-17	24"	6'	8'	6'	CLASS A RIPRAP	9"
FES-SCM 1	18"	4.5'	6'	4.5'	CLASS A RIPRAP	9"

RIPRAP ENERGY DISSIPATOR
NO SCALE

CALL 48 HOURS BEFORE YOU DIG
North Carolina 811
www.nc811.org
NORTH CAROLINA ONE-CALL CENTER
1-800-632-4949

CITY OF RALEIGH - PLANS AUTHORIZED FOR CONSTRUCTION
ELECTRONIC APPROVAL: THIS APPROVAL IS BEING ISSUED ELECTRONICALLY. THIS APPROVAL IS VALID ONLY UPON THE SIGNATURE OF A CITY OF RALEIGH REVIEW OFFICER BELOW. THE CITY WILL RETAIN A COPY OF THE APPROVED PLANS. ANY WORK AUTHORIZED BY THIS APPROVAL MUST PROCEED IN ACCORDANCE WITH THE PLANS KEPT ON FILE WITH THE CITY. THIS ELECTRONIC APPROVAL MAY NOT BE EDITED ONCE ISSUED. ANY MODIFICATION TO THIS APPROVAL ONCE ISSUED WILL INVALIDATE THIS APPROVAL.

CITY OF RALEIGH DEVELOPMENT APPROVAL ______________________
RALEIGH WATER REVIEW OFFICER

ALL CONSTRUCTION SHALL BE IN ACCORDANCE WITH ALL TOWN OF ROLESVILLE, CITY OF RALEIGH AND WAKE COUNTY STANDARDS AND SPECIFICATIONS

FLM ENGINEERING
POST OFFICE BOX 91727
RALEIGH, NORTH CAROLINA 27675
PHONE: 919.610.1051
FIRM NC LICENSE NUMBER C-4222

NORTH CAROLINA PROFESSIONAL ENGINEER SEAL 033775 JONATHAN D. FRAZIER 6/3/24

REVISION HISTORY

REV #	DESCRIPTION	DATE	BY

ORIGINAL PLAN SIZE: 24" X 36"

SCALE ADJUSTMENT
THIS BAR IS 1 INCH IN LENGTH ON ORIGINAL DRAWING
0 1"
IF IT IS NOT 1 INCH ON THIS SHEET, ADJUST YOUR SCALE ACCORDINGLY

SITE CONSTRUCTION PLANS

PINE GLO
414 S MAIN ST
ROLESVILLE, NC 27571

OPTIMAL GLO LLC

DATE:	06-03-2024
SCALE:	AS SHOWN
DESIGNED BY:	FLM
APPROVED BY:	FLM
PROJECT NO.:	24028

EROSION & SEDIMENT CONTROL DETAILS

C-15

© 2024 THIS DRAWING SHALL NOT BE REPRODUCED IN WHOLE OR IN PART WITHOUT WRITTEN PERMISSION OF FLM ENGINEERING, INC.

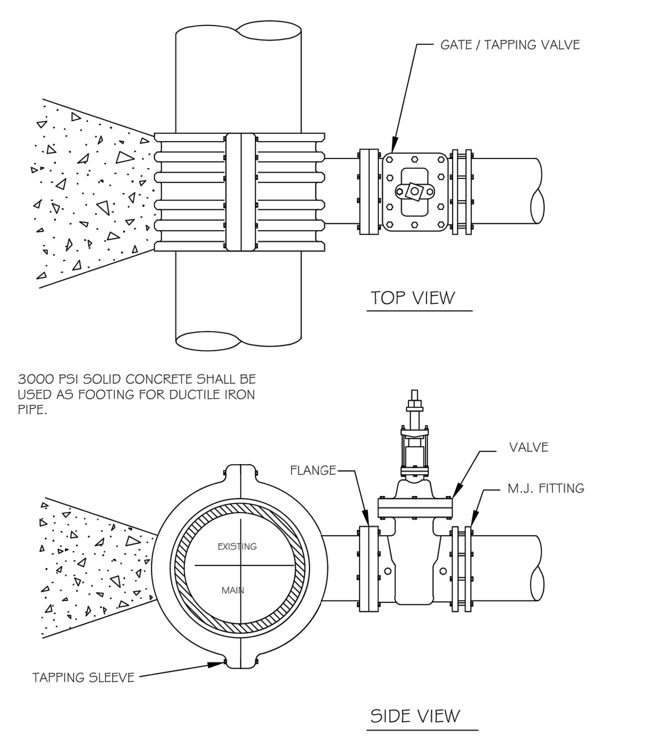

NOTES:
1. CONCRETE SHALL NOT CONTACT BOLTS OR ENDS OF MECHANICAL JOINT FITTINGS.
2. SEE STANDARD REACTION BLOCK TABLES, W-10 AND W-11 FOR AREA OF CONCRETE REQUIRED.

CITY OF RALEIGH
DEPARTMENT OF PUBLIC UTILITIES
4" - 24" STANDARD TAPPING SLEEVE AND VALVE ASSEMBLY

DWG. NO.	REVISIONS	DATE	REVISIONS	DATE
W-14	Y.C.A.	12-31-91	RRH	3-31-00
	D.W.C.	9-7-99	J.P.S.	11-1-10

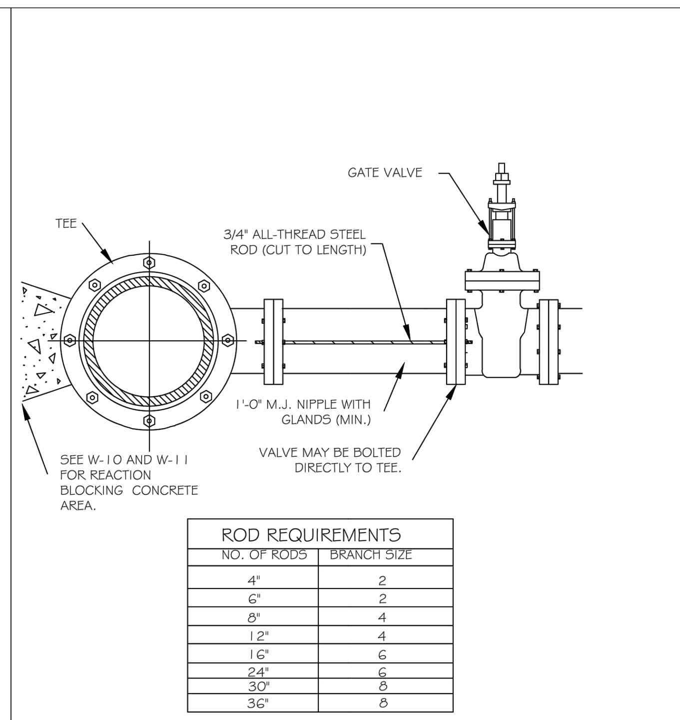

ROD REQUIREMENTS	
NO. OF RODS	BRANCH SIZE
4"	2
6"	2
8"	4
12"	4
16"	6
24"	6
30"	8
36"	8

NOTES:
1. STEEL RODS AND BOLTS SHALL BE 3/4" HOT DIPPED GALVANIZED.
2. SEE STANDARD THRUST BLOCK. TABLES W-10 AND W-11 FOR CONCRETE.
3. CONCRETE SHALL NOT CONTACT BOLTS OR ENDS OF MECHANICAL FITTINGS.
4. THIS RODDING REQUIREMENT DOES NOT APPLY TO FIRE HYDRANTS.

CITY OF RALEIGH
DEPARTMENT OF PUBLIC UTILITIES
VALVE RESTRAINT AT TEES AND CROSSES FOR LINES (4"-24")

DWG. NO.	REVISIONS	DATE	REVISIONS	DATE
W-15	RRH	3-31-00	D.H.L.	6-16-08
	A.B.B.	4-19-04	J.P.S.	11-1-10

APPROVED METHOD FOR EXTENSION OF VALVE BOX

NOTE: 2'x 2'x 6" CONCRETE PAD REQUIRED ON ALL VALVES. NO PRECAST CONCRETE DOUGHNUT ALLOWED.

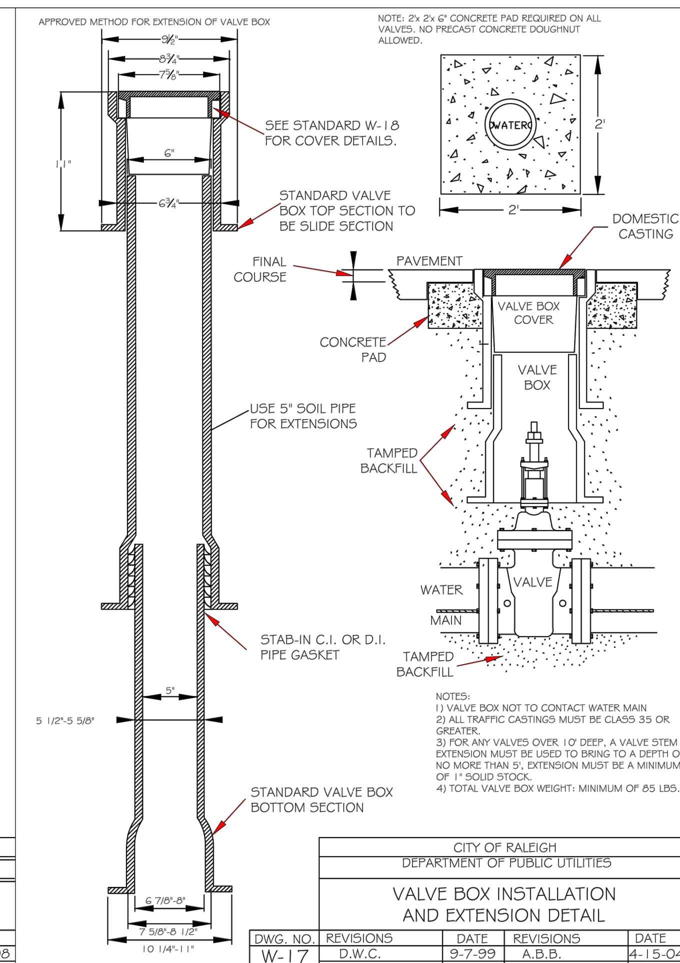

NOTES:
1) VALVE BOX NOT TO CONTACT WATER MAIN
2) ALL TRAFFIC CASTINGS MUST BE CLASS 35 OR GREATER.
3) FOR ANY VALVES OVER 10' DEEP, A VALVE STEM EXTENSION MUST BE USED TO BRING TO A DEPTH OF NO MORE THAN 5', EXTENSION MUST BE A MINIMUM OF 1" SOLID STOCK.
4) TOTAL VALVE BOX WEIGHT: MINIMUM OF 85 LBS.

CITY OF RALEIGH
DEPARTMENT OF PUBLIC UTILITIES
VALVE BOX INSTALLATION AND EXTENSION DETAIL

DWG. NO.	REVISIONS	DATE	REVISIONS	DATE
W-17	D.W.C.	9-7-99	A.B.B.	4-15-04
	RRH	3-31-00	DHL	8-16-07

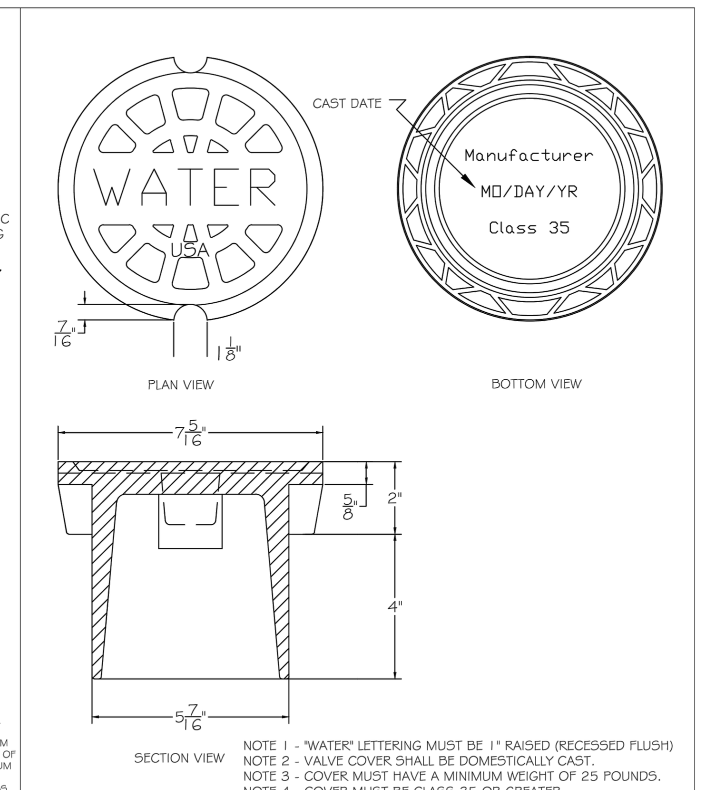

NOTE 1 - "WATER" LETTERING MUST BE 1" RAISED (RECESSED FLUSH)
NOTE 2 - VALVE COVER SHALL BE DOMESTICALLY CAST.
NOTE 3 - COVER MUST HAVE A MINIMUM WEIGHT OF 25 POUNDS.
NOTE 4 - COVER MUST BE CLASS 35 OR GREATER.
NOTE 5 - COVER MUST MEET OR EXCEED AASHTO H-20 LOAD REQUIREMENTS.

CITY OF RALEIGH
DEPARTMENT OF PUBLIC UTILITIES
5 1/4" VALVE BOX DROP LID WITH 4" SKIRT

DWG. NO.	REVISIONS	DATE	REVISIONS	DATE
W-18				

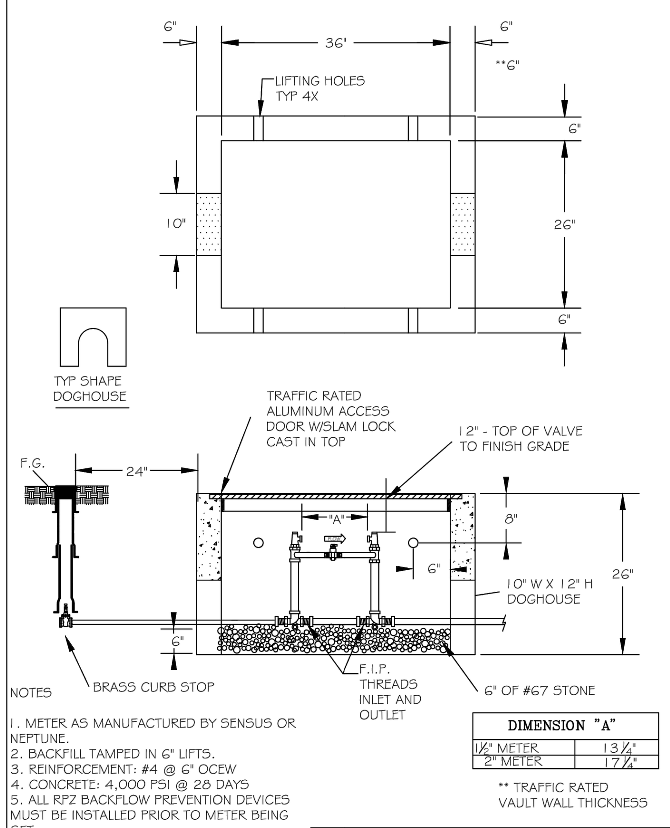

DIMENSION "A"	
1½" METER	13¼"
2" METER	17¼"

** TRAFFIC RATED VAULT WALL THICKNESS

NOTES
1. METER AS MANUFACTURED BY SENSUS OR NEPTUNE.
2. BACKFILL TAMPED IN 6" LIFTS.
3. REINFORCEMENT: #4 @ 6" OCEW
4. CONCRETE: 4,000 PSI @ 28 DAYS
5. ALL RPZ BACKFLOW PREVENTION DEVICES MUST BE INSTALLED PRIOR TO METER BEING SET.
6) ALL COPPER SETTERS ARE TO HAVE A BALL TYPE SHUT OFF VALVE ON BOTH SIDES OF COPPER SETTER WITH HIGH RISE BYPASS THAT IS MANUFACTURED BY FORD, MUELLER, OR AY McDONALD. (NO EXCEPTIONS)

CITY OF RALEIGH
DEPARTMENT OF PUBLIC UTILITIES
TYPICAL 1 1/2"- 2" WATER METER BOX INSTALLATION

DWG. NO.	REVISIONS	DATE	REVISIONS	DATE
W-31	A.B.B.	8-17-04	J.P.S.	11-4-10
	D.H.L	6-18-08		

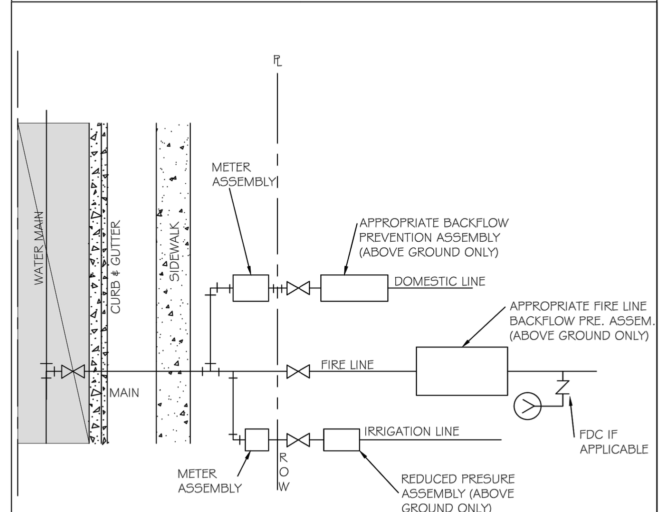

1. SERVICE TAPS FOR 2" AND SMALLER DOMESTIC SERVICES MAY BE BY CORPORATION COCKS. LARGER SERVICES WILL REQUIRE A TEE AND GATE VALVE OR TAPPING SLEEVE AND VALVE ASSEMBLY AND 90° BEND.
2. DOMESTIC SERVICE TAPS SHALL BE ALLOWED ONLY ON 6" OR LARGER FIRE LINES BEFORE THE BACKFLOW ASSEMBLY.
3. ONE DOMESTIC TAP PER FIRE LINE ON STREET SIDE OF BACKFLOW. 4. FIRE LINE SHALL HAVE A FIRE HYDRANT OR BLOW OFF ASSEMBLY AT ITS END TO FACILITATE FLUSHING WHEN NEEDED.
5. IRRIGATION METER SHALL BE LOCATED ON THE SIDE OF DOMESTIC METER WITH INCREASING ADDRESSES.
6. THE BACKFLOW SHALL BE INSTALLED NO MORE THAN 50' FROM THE METER IN A VISIBLE LOCATION.
7. DOMESTIC/IRRIGATION BACKFLOW RISER/STANDPIPE SHALL BE OF COPPER OR BRASS.
8. THE RP RELIEF VALVE SHALL BE A MINIMUM OF 12" ABOVE ANY MATERIAL (MULCH INCLUDED) OR GRADE.
9. A SERVICE VALVE IS REQUIRED AFTER THE METER BUT BEFORE THE BACKFLOW ASSEMBLY FOR MAINTENANCE AND REPLACEMENT PURPOSES.
10. THE INSTALLATION MUST ALSO MEET ALL CODE REQUIREMENTS PER THE NC PLUMBING CODE.

CITY OF RALEIGH
DEPARTMENT OF PUBLIC UTILITIES
FIRE, DOMESTIC & IRRIGATION OPTIONS SCHEMATIC

DWG. NO.	REVISIONS	DATE	REVISIONS	DATE
W-34	D.W.C.	11-18-99	A.B.B.	7-10-04
	RRH	3-31-00	D.H.L.	6/18/08

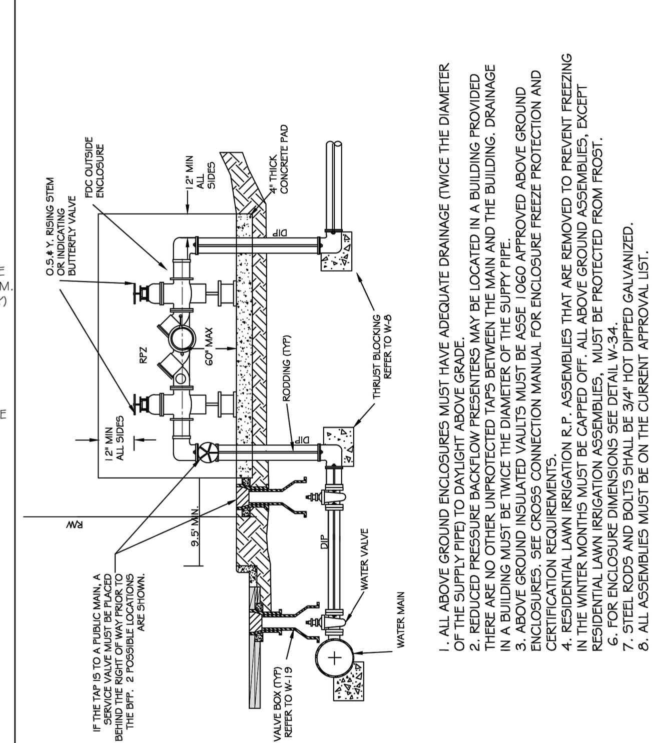

1. ALL ABOVE GROUND ENCLOSURES MUST HAVE ADEQUATE DRAINAGE (TWICE THE DIAMETER OF THE SUPPLY PIPE) TO DAYLIGHT ABOVE GRADE.
2. REDUCED PRESSURE BACKFLOW PRESENTERS MAY BE LOCATED IN A BUILDING PROVIDED THERE ARE NO OTHER UNPROTECTED TAPS BETWEEN THE MAIN AND THE BUILDING. DRAINAGE IN A BUILDING MUST BE TWICE THE DIAMETER OF THE SUPPY PIPE.
3. ABOVE GROUND INSULATED VAULTS MUST BE ASSE 1060 APPROVED ABOVE GROUND ENCLOSURES. SEE CROSS CONNECTION MANUAL FOR ENCLOSURE FREEZE PROTECTION AND CERTIFICATION REQUIREMENTS.
4. RESIDENTIAL LAWN IRRIGATION R.P. ASSEMBLIES THAT ARE REMOVED TO PREVENT FREEZING IN THE WINTER MONTHS MUST BE CAPPED OFF. ALL ABOVE GROUND ASSEMBLIES, EXCEPT RESIDENTIAL LAWN IRRIGATION ASSEMBLIES, MUST BE PROTECTED FROM FROST.
6. FOR ENCLOSURE DIMENSIONS SEE DETAIL W-34.
7. STEEL RODS AND BOLTS SHALL BE 3/4" HOT DIPPED GALVANIZED.
8. ALL ASSEMBLIES MUST BE ON THE CURRENT APPROVAL LIST.

CITY OF RALEIGH
DEPARTMENT OF PUBLIC UTILITIES
TYPICAL REDUCED PRESSURE ZONE BACKFLOW PREVENTER ASSEMBLY

DWG. NO.	REVISIONS	DATE	REVISIONS	DATE
W-36	Y.C.A.	12-31-91	A.B.B.	7-10-04
	D.W.C.	11-8-99	D.H.L.	6/18/08

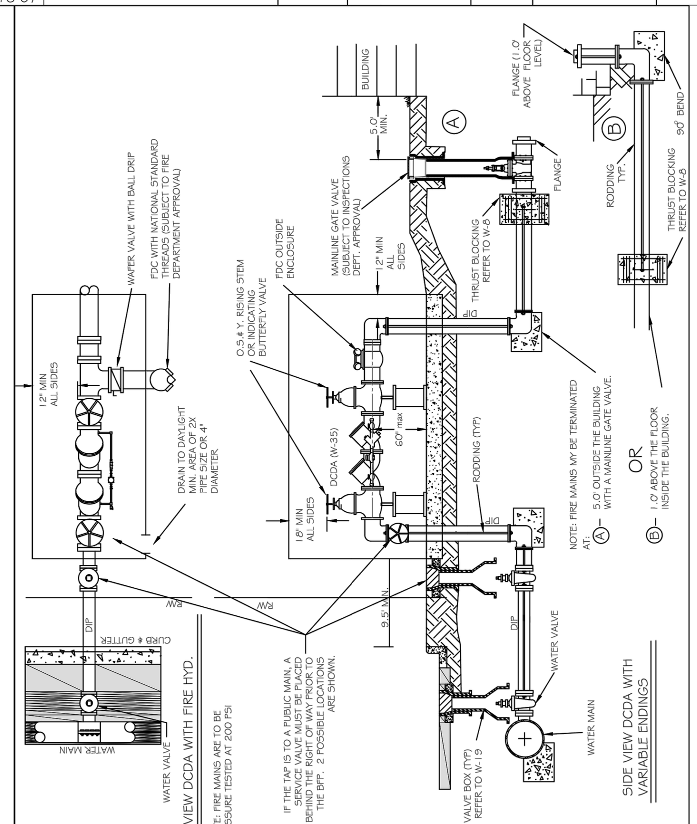

CITY OF RALEIGH
DEPARTMENT OF PUBLIC UTILITIES
TYPICAL FIRE MAIN DOUBLE DETECTOR CHECK VALVE ASSEMBLY

DWG. NO.	REVISIONS	DATE	REVISIONS	DATE
W-37	Y.C.A.	6-92	ABB	10-4-04
	D.W.C.	11-3-99	D.H.L.	6/18/08

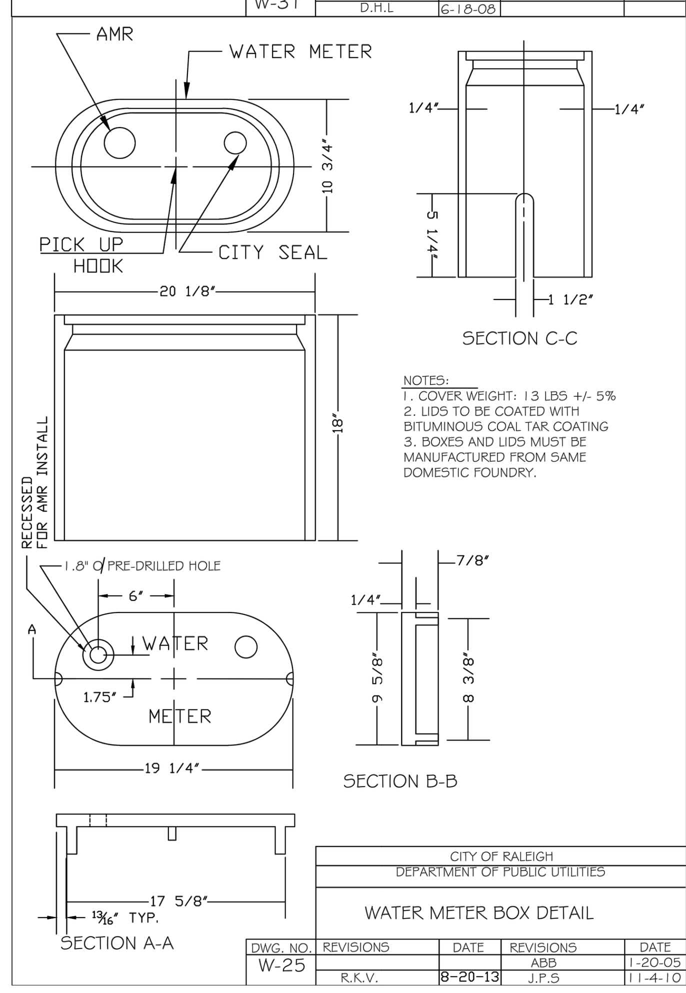

NOTES:
1. COVER WEIGHT: 13 LBS +/- 5%
2. LIDS TO BE COATED WITH BITUMINOUS COAL TAR COATING
3. BOXES AND LIDS MUST BE MANUFACTURED FROM SAME DOMESTIC FOUNDRY.

CITY OF RALEIGH
DEPARTMENT OF PUBLIC UTILITIES
WATER METER BOX DETAIL

DWG. NO.	REVISIONS	DATE	REVISIONS	DATE
W-25			ABB	1-20-05
	R.K.V.	8-20-13	J.P.S	11-4-10

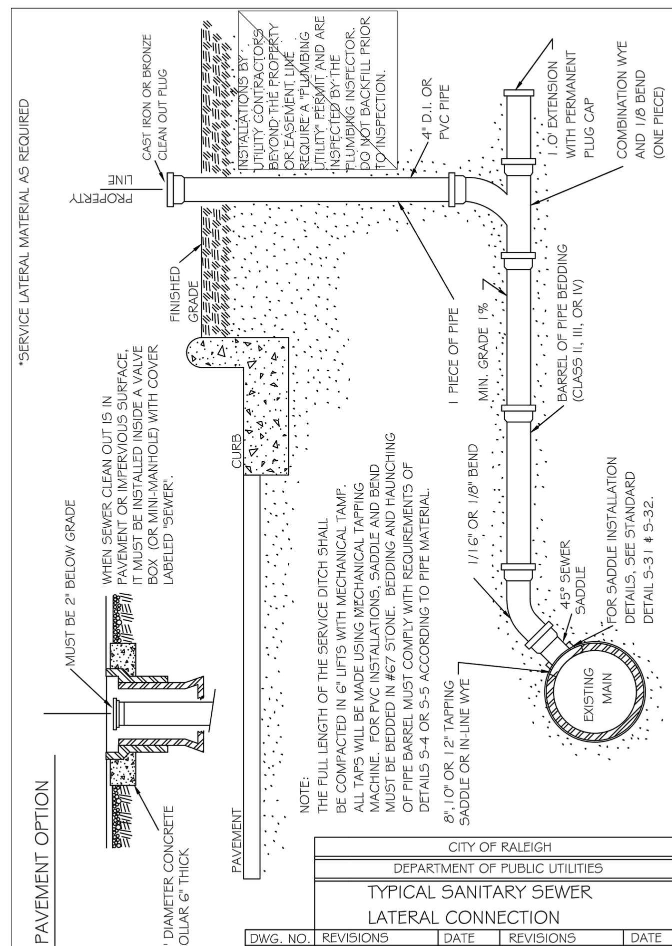

NOTE:
THE FULL LENGTH OF THE SERVICE DITCH SHALL BE COMPACTED IN 6" LIFTS WITH MECHANICAL TAMP. ALL TAPS WILL BE MADE USING MECHANICAL TAPPING MACHINE. FOR PVC INSTALLATIONS, SADDLE AND BEND MUST BE BEDDED IN #67 STONE. BEDDING AND HAUNCHING OF PIPE BARREL MUST COMPLY WITH REQUIREMENTS OF DETAILS S-4 OR S-5 ACCORDING TO PIPE MATERIAL.

CITY OF RALEIGH
DEPARTMENT OF PUBLIC UTILITIES
TYPICAL SANITARY SEWER LATERAL CONNECTION

DWG. NO.	REVISIONS	DATE	REVISIONS	DATE
S-30	Y.C.A.	6-92	A.B.B.	4-8-04
	RRH	3-30-00	D.H.L.	6-18-08

NOTES:
1. THE TRACER WIRE SHALL BE CONTINUOUS TO THE GREATEST EXTENT POSSIBLE. WHERE JOINTS ARE NECESSITATED IN THE WIRE, THE JOINTS SHALL BE SECURELY BONDED TOGETHER WITH AN APPROVED INDUSTRIAL CRIMP CONNECTOR TO PROVIDE ELECTRICAL CONTINUITY. CRIMPS SHALL BE SIMILAR METAL.
2. THE CLEANOUT AT THE RIGHT OF WAY AND OR EASEMENT SHALL SERVE AS THE TEST PORT WITH THE TRACING WIRE BROUGHT UP OUTSIDE THE CLEANOUT ASSEMBLY AND WRAPPED AROUND THE STACK TWICE AT A DEPTH OF APPROXIMATELY 12" BELOW GRADE.
3. SPLICED CONNECTIONS SHALL BE ALLOWED BETWEEN THE MAIN LINE TRACER WIRE AND THE LATERAL TRACER WIRE.
4. FOR NEW SEWER TAPS ON EXISTING MAINS VOID OF ANY TRACER WIRE, PROVIDE AN ANODE FOR THE TRACING WIRE TERMINATION AT THE POINT OF THE NEW TAP ON THE EXISTING SEWER MAIN.

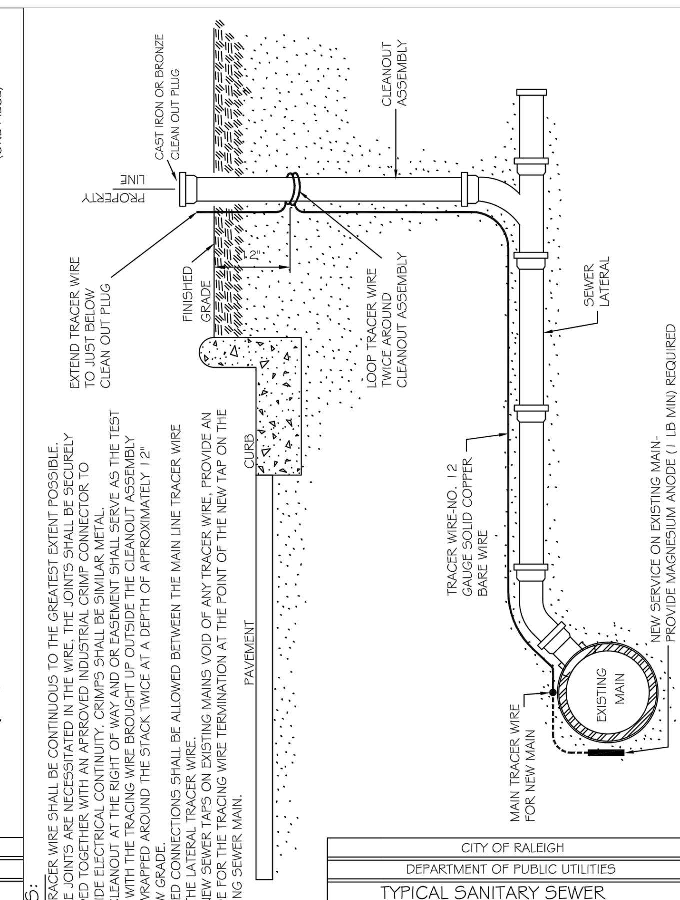

CITY OF RALEIGH
DEPARTMENT OF PUBLIC UTILITIES
TYPICAL SANITARY SEWER LATERAL TRACER WIRE

DWG. NO.	REVISIONS	DATE	REVISIONS	DATE
S-30A	WKD	9-14		

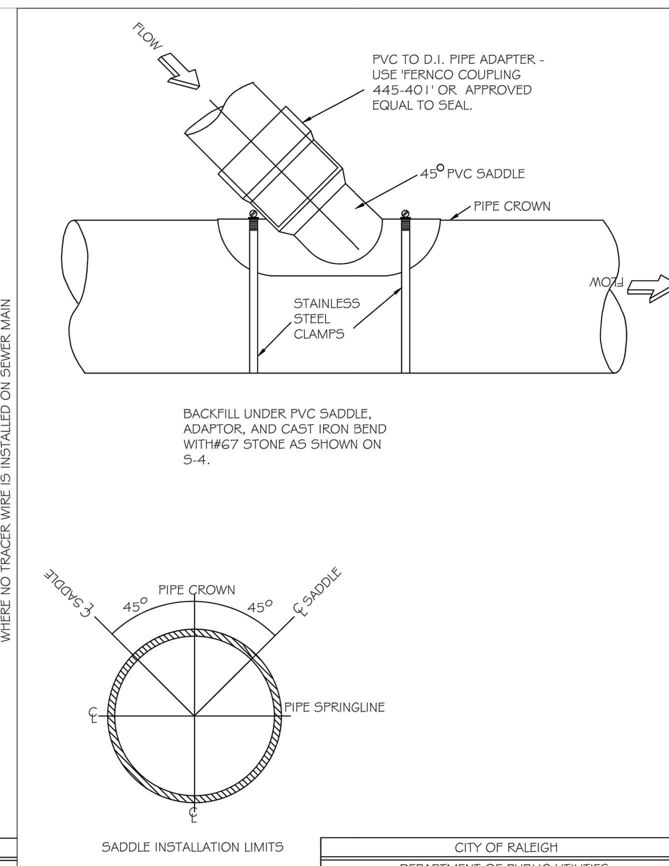

CITY OF RALEIGH
DEPARTMENT OF PUBLIC UTILITIES
LATERAL SADDLE INSTALLATION DETAIL FOR PVC PIPE

DWG. NO.	REVISIONS	DATE	REVISIONS	DATE
S-31		3-1-87		
	RRH	3-30-00		

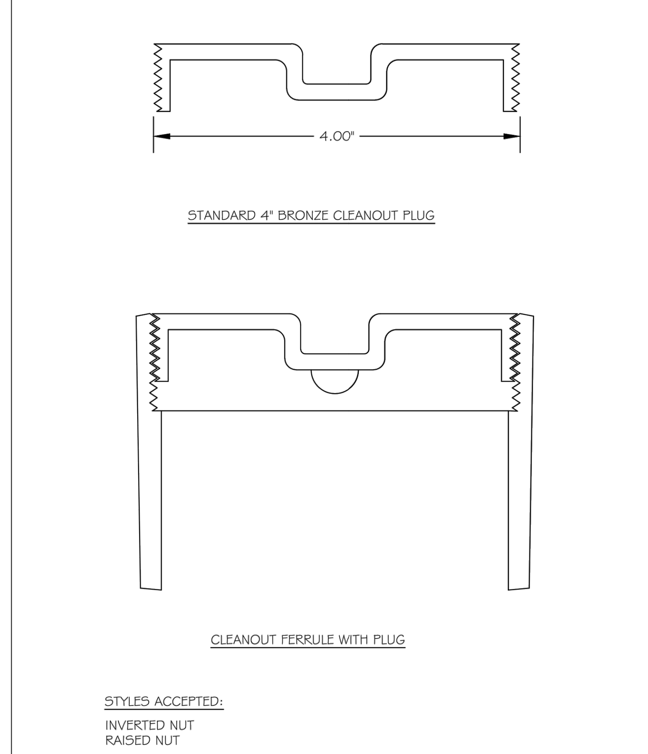

STYLES ACCEPTED:
INVERTED NUT
RAISED NUT

CITY OF RALEIGH
DEPARTMENT OF PUBLIC UTILITIES
4" CLEANOUT PLUG

DWG. NO.	REVISIONS	DATE	REVISIONS	DATE
S-34		3-1-87	RRH	3-30-00
	D.W.C.	3-27-98		

CALL 48 HOURS BEFORE YOU DIG

North Carolina 811 www.nc811.org

NORTH CAROLINA ONE-CALL CENTER
1-800-632-4949

CITY OF RALEIGH - PLANS AUTHORIZED FOR CONSTRUCTION

ELECTRONIC APPROVAL: THIS APPROVAL IS BEING ISSUED ELECTRONICALLY. THIS APPROVAL IS VALID ONLY UPON THE SIGNATURE OF A CITY OF RALEIGH REVIEW OFFICER BELOW. THE CITY WILL RETAIN A COPY OF THE APPROVED PLANS. ANY WORK AUTHORIZED BY THIS APPROVAL MUST PROCEED IN ACCORDANCE WITH THE PLANS KEPT ON FILE WITH THE CITY. THIS ELECTRONIC APPROVAL MAY NOT BE EDITED ONCE ISSUED. ANY MODIFICATION TO THIS APPROVAL ONCE ISSUED WILL INVALIDATE THIS APPROVAL.

CITY OF RALEIGH DEVELOPMENT APPROVAL ______________________
RALEIGH WATER REVIEW OFFICER

ALL CONSTRUCTION SHALL BE IN ACCORDANCE WITH ALL TOWN OF ROLESVILLE, CITY OF RALEIGH AND WAKE COUNTY STANDARDS AND SPECIFICATIONS

FLM ENGINEERING
POST OFFICE BOX 91727
RALEIGH, NORTH CAROLINA 27675
PHONE: 919.610.1051
FIRM NC LICENSE NUMBER C-4222

NORTH CAROLINA PROFESSIONAL ENGINEER SEAL 033775 JONATHAN D. FRAZIER 6/3/24

REVISION HISTORY

REV #	DESCRIPTION	DATE	BY

ORIGINAL PLAN SIZE: 24" X 36"

SCALE ADJUSTMENT
THIS BAR IS 1 INCH IN LENGTH ON ORIGINAL DRAWING
0 1"
IF IT IS NOT 1 INCH ON THIS SHEET, ADJUST YOUR SCALE ACCORDINGLY

SITE CONSTRUCTION PLANS

PINE GLO
414 S MAIN ST
ROLESVILLE, NC 27571

OPTIMAL GLO LLC

DATE:	06-03-2024
SCALE:	AS SHOWN
DESIGNED BY:	FLM
APPROVED BY:	FLM
PROJECT NO.:	24028

WATER & SEWER DETAILS

C-16

© 2024 THIS DRAWING SHALL NOT BE REPRODUCED IN WHOLE OR IN PART WITHOUT WRITTEN PERMISSION OF FLM ENGINEERING, INC.

PART III
SELF-INSPECTION, RECORDKEEPING AND REPORTING

SECTION A: SELF-INSPECTION

Self-inspections are required during normal business hours in accordance with the table below. When adverse weather or site conditions would cause the safety of the inspection personnel to be in jeopardy, the inspection may be delayed until the next business day on which it is safe to perform the inspection. In addition, when a storm event of equal to or greater than 1.0 inch occurs outside of normal business hours, the self-inspection shall be performed upon the commencement of the next business day. Any time when inspections were delayed shall be noted in the Inspection Record.

Inspect	Frequency (during normal business hours)	Inspection records must include:
(1) Rain gauge maintained in good working order	Daily	Daily rainfall amounts. If no daily rain gauge observations are made during weekend or holiday periods, and no individual-day rainfall information is available, record the cumulative rain measurement for those un-attended days (and this will determine if a site inspection is needed). Days on which no rainfall occurred shall be recorded as "zero." The permittee may use another rain-monitoring device approved by the Division.
(2) E&SC Measures	At least once per 7 calendar days and within 24 hours of a rain event ≥ 1.0 inch in 24 hours	1. Identification of the measures inspected, 2. Date and time of the inspection, 3. Name of the person performing the inspection, 4. Indication of whether the measures were operating properly, 5. Description of maintenance needs for the measure, 6. Description, evidence, and date of corrective actions taken.
(3) Stormwater discharge outfalls (SDOs)	At least once per 7 calendar days and within 24 hours of a rain event ≥ 1.0 inch in 24 hours	1. Identification of the discharge outfalls inspected, 2. Date and time of the inspection, 3. Name of the person performing the inspection, 4. Evidence of indicators of stormwater pollution such as oil sheen, floating or suspended solids or discoloration, 5. Indication of visible sediment leaving the site, 6. Description, evidence, and date of corrective actions taken.
(4) Perimeter of site	At least once per 7 calendar days and within 24 hours of a rain event ≥ 1.0 inch in 24 hours	If visible sedimentation is found outside site limits, then a record of the following shall be made: 1. Actions taken to clean up or stabilize the sediment that has left the site limits, 2. Description, evidence, and date of corrective actions taken, and 3. An explanation as to the actions taken to control future releases.
(5) Streams or wetlands onsite or offsite (where accessible)	At least once per 7 calendar days and within 24 hours of a rain event ≥ 1.0 inch in 24 hours	If the stream or wetland has increased visible sedimentation or a stream has visible increased turbidity from the construction activity, then a record of the following shall be made: 1. Description, evidence and date of corrective actions taken, and 2. Records of the required reports to the appropriate Division Regional Office per Part III, Section C, Item (2)(a) of this permit.
(6) Ground stabilization measures	After each phase of grading	1. The phase of grading (installation of perimeter E&SC measures, clearing and grubbing, installation of storm drainage facilities, completion of all land-disturbing activity, construction or redevelopment, permanent ground cover). 2. Documentation that the required ground stabilization measures have been provided within the required timeframe or an assurance that they will be provided as soon as possible.

NOTE: The rain inspection resets the required 7 calendar day inspection requirement.

PART III
SELF-INSPECTION, RECORDKEEPING AND REPORTING

SECTION B: RECORDKEEPING

1. E&SC Plan Documentation

The approved E&SC plan as well as any approved deviation shall be kept on the site. The approved E&SC plan must be kept up-to-date throughout the coverage under this permit. The following items pertaining to the E&SC plan shall be kept on site and available for inspection at all times during normal business hours.

Item to Document	Documentation Requirements
(a) Each E&SC measure has been installed and does not significantly deviate from the locations, dimensions and relative elevations shown on the approved E&SC plan.	Initial and date each E&SC measure on a copy of the approved E&SC plan or complete, date and sign an inspection report that lists each E&SC measure shown on the approved E&SC plan. This documentation is required upon the initial installation of the E&SC measures or if the E&SC measures are modified after initial installation.
(b) A phase of grading has been completed.	Initial and date a copy of the approved E&SC plan or complete, date and sign an inspection report to indicate completion of the construction phase.
(c) Ground cover is located and installed in accordance with the approved E&SC plan.	Initial and date a copy of the approved E&SC plan or complete, date and sign an inspection report to indicate compliance with approved ground cover specifications.
(d) The maintenance and repair requirements for all E&SC measures have been performed.	Complete, date and sign an inspection report.
(e) Corrective actions have been taken to E&SC measures.	Initial and date a copy of the approved E&SC plan or complete, date and sign an inspection report to indicate the completion of the corrective action.

2. Additional Documentation to be Kept on Site

In addition to the E&SC plan documents above, the following items shall be kept on the site and available for inspectors at all times during normal business hours, unless the Division provides a site-specific exemption based on unique site conditions that make this requirement not practical:

(a) This General Permit as well as the Certificate of Coverage, after it is received.

(b) Records of inspections made during the previous twelve months. The permittee shall record the required observations on the Inspection Record Form provided by the Division or a similar inspection form that includes all the required elements. Use of electronically-available records in lieu of the required paper copies will be allowed if shown to provide equal access and utility as the hard-copy records.

3. Documentation to be Retained for Three Years

All data used to complete the e-NOI and all inspection records shall be maintained for a period of three years after project completion and made available upon request. [40 CFR 122.41]

PART III
SELF-INSPECTION, RECORDKEEPING AND REPORTING

SECTION C: REPORTING

1. Occurrences that Must be Reported

Permittees shall report the following occurrences:

(a) Visible sediment deposition in a stream or wetland.

(b) Oil spills if:
- They are 25 gallons or more,
- They are less than 25 gallons but cannot be cleaned up within 24 hours,
- They cause sheen on surface waters (regardless of volume), or
- They are within 100 feet of surface waters (regardless of volume).

(c) Releases of hazardous substances in excess of reportable quantities under Section 311 of the Clean Water Act (Ref: 40 CFR 110.3 and 40 CFR 117.3) or Section 102 of CERCLA (Ref: 40 CFR 302.4) or G.S. 143-215.85.

(d) Anticipated bypasses and unanticipated bypasses.

(e) Noncompliance with the conditions of this permit that may endanger health or the environment.

2. Reporting Timeframes and Other Requirements

After a permittee becomes aware of an occurrence that must be reported, he shall contact the appropriate Division regional office within the timeframes and in accordance with the other requirements listed below. Occurrences outside normal business hours may also be reported to the Department's Environmental Emergency Center personnel at (800) 858-0368.

Occurrence	Reporting Timeframes (After Discovery) and Other Requirements
(a) Visible sediment deposition in a stream or wetland	• ***Within 24 hours***, an oral or electronic notification. • ***Within 7 calendar days***, a report that contains a description of the sediment and actions taken to address the cause of the deposition. Division staff may waive the requirement for a written report on a case-by-case basis. • If the stream is named on the NC 303(d) list as impaired for sediment-related causes, the permittee may be required to perform additional monitoring, inspections or apply more stringent practices if staff determine that additional requirements are needed to assure compliance with the federal or state impaired-waters conditions.
(b) Oil spills and release of hazardous substances per Item 1(b)-(c) above	• ***Within 24 hours***, an oral or electronic notification. The notification shall include information about the date, time, nature, volume and location of the spill or release.
(c) Anticipated bypasses [40 CFR 122.41(m)(3)]	• ***A report at least ten days before the date of the bypass, if possible***. The report shall include an evaluation of the anticipated quality and effect of the bypass.
(d) Unanticipated bypasses [40 CFR 122.41(m)(3)]	• ***Within 24 hours***, an oral or electronic notification. • ***Within 7 calendar days,*** a report that includes an evaluation of the quality and effect of the bypass.
(e) Noncompliance with the conditions of this permit that may endanger health or the environment[40 CFR 122.41(l)(7)]	• ***Within 24 hours***, an oral or electronic notification. • ***Within 7 calendar days***, a report that contains a description of the noncompliance, and its causes; the period of noncompliance, including exact dates and times, and if the noncompliance has not been corrected, the anticipated time noncompliance is expected to continue; and steps taken or planned to reduce, eliminate, and prevent reoccurrence of the noncompliance. [40 CFR 122.41(l)(6). • Division staff may waive the requirement for a written report on a case-by-case basis.

PART II, SECTION G, ITEM (4)
DRAW DOWN OF SEDIMENT BASINS FOR MAINTENANCE OR CLOSE OUT

Sediment basins and traps that receive runoff from drainage areas of one acre or more shall use outlet structures that withdraw water from the surface when these devices need to be drawn down for maintenance or close out unless this is infeasible. The circumstances in which it is not feasible to withdraw water from the surface shall be rare (for example, times with extended cold weather). Non-surface withdrawals from sediment basins shall be allowed only when all of the following criteria have been met:

(a) The E&SC plan authority has been provided with documentation of the non-surface withdrawal and the specific time periods or conditions in which it will occur. The non-surface withdrawal shall not commence until the E&SC plan authority has approved these items,
(b) The non-surface withdrawal has been reported as an anticipated bypass in accordance with Part III, Section C, Item (2)(c) and (d) of this permit,
(c) Dewatering discharges are treated with controls to minimize discharges of pollutants from stormwater that is removed from the sediment basin. Examples of appropriate controls include properly sited, designed and maintained dewatering tanks, weir tanks, and filtration systems,
(d) Vegetated, upland areas of the sites or a properly designed stone pad is used to the extent feasible at the outlet of the dewatering treatment devices described in Item (c) above,
(e) Velocity dissipation devices such as check dams, sediment traps, and riprap are provided at the discharge points of all dewatering devices, and
(f) Sediment removed from the dewatering treatment devices described in Item (c) above is disposed of in a manner that does not cause deposition of sediment into waters of the United States.

NCG01 SELF-INSPECTION, RECORDKEEPING AND REPORTING

EFFECTIVE: 04/01/19

CALL 48 HOURS BEFORE YOU DIG

North Carolina 811 www.nc811.org

NORTH CAROLINA ONE-CALL CENTER 1-800-632-4949

CITY OF RALEIGH - PLANS AUTHORIZED FOR CONSTRUCTION

ELECTRONIC APPROVAL: THIS APPROVAL IS BEING ISSUED ELECTRONICALLY. THIS APPROVAL IS VALID ONLY UPON THE SIGNATURE OF A CITY OF RALEIGH REVIEW OFFICER BELOW. THE CITY WILL RETAIN A COPY OF THE APPROVED PLANS. ANY WORK AUTHORIZED BY THIS APPROVAL MUST PROCEED IN ACCORDANCE WITH THE PLANS KEPT ON FILE WITH THE CITY. THIS ELECTRONIC APPROVAL MAY NOT BE EDITED ONCE ISSUED. ANY MODIFICATION TO THIS APPROVAL ONCE ISSUED WILL INVALIDATE THIS APPROVAL.

CITY OF RALEIGH DEVELOPMENT APPROVAL _____

RALEIGH WATER REVIEW OFFICER

ALL CONSTRUCTION SHALL BE IN ACCORDANCE WITH ALL TOWN OF ROLESVILLE, CITY OF RALEIGH AND WAKE COUNTY STANDARDS AND SPECIFICATIONS

© 2024 THIS DRAWING SHALL NOT BE REPRODUCED IN WHOLE OR IN PART WITHOUT WRITTEN PERMISSION OF FLM ENGINEERING, INC.

FLM ENGINEERING

POST OFFICE BOX 91727
RALEIGH, NORTH CAROLINA 27675
PHONE: 919.610.1051
FIRM NC LICENSE NUMBER C-4222

NORTH CAROLINA PROFESSIONAL SEAL 033775 ENGINEER JONATHAN D. FRAZIER 6/3/24

REVISION HISTORY

REV #	DESCRIPTION	DATE	BY

ORIGINAL PLAN SIZE: 24" X 36"

SCALE ADJUSTMENT

THIS BAR IS 1 INCH IN LENGTH ON ORIGINAL DRAWING

0 1"

IF IT IS NOT 1 INCH ON THIS SHEET, ADJUST YOUR SCALE ACCORDINGLY

SITE CONSTRUCTION PLANS

PINE GLO
414 S MAIN ST
ROLESVILLE, NC 27571

OPTIMAL GLO LLC

DATE:	06-03-2024
SCALE:	AS SHOWN
DESIGNED BY:	FLM
APPROVED BY:	FLM
PROJECT NO.:	24028

NCG01 SELF-INSPECTION, RECORDKEEPING & REPORTING

C-17

SHEET 17 OF 18

GROUND STABILIZATION AND MATERIALS HANDLING PRACTICES FOR COMPLIANCE WITH THE NCG01 CONSTRUCTION GENERAL PERMIT

Implementing the details and specifications on this plan sheet will result in the construction activity being considered compliant with the Ground Stabilization and Materials Handling sections of the NCG01 Construction General Permit (Sections E and F, respectively). The permittee shall comply with the Erosion and Sediment Control plan approved by the delegated authority having jurisdiction. All details and specifications shown on this sheet may not apply depending on site conditions and the delegated authority having jurisdiction.

SECTION E: GROUND STABILIZATION

Required Ground Stabilization Timeframes

Site Area Description	Stabilize within this many calendar days after ceasing land disturbance	Timeframe variations
(a) Perimeter dikes, swales, ditches, and perimeter slopes	7	None
(b) High Quality Water (HQW) Zones	7	None
(c) Slopes steeper than 3:1	7	If slopes are 10' or less in length and are not steeper than 2:1, 14 days are allowed
(d) Slopes 3:1 to 4:1	14	-7 days for slopes greater than 50' in length and with slopes steeper than 4:1 -7 days for perimeter dikes, swales, ditches, perimeter slopes and HQW Zones -10 days for Falls Lake Watershed
(e) Areas with slopes flatter than 4:1	14	-7 days for perimeter dikes, swales, ditches, perimeter slopes and HQW Zones -10 days for Falls Lake Watershed unless there is zero slope

Note: After the permanent cessation of construction activities, any areas with temporary ground stabilization shall be converted to permanent ground stabilization as soon as practicable but in no case longer than 90 calendar days after the last land disturbing activity. Temporary ground stabilization shall be maintained in a manner to render the surface stable against accelerated erosion until permanent ground stabilization is achieved.

GROUND STABILIZATION SPECIFICATION

Stabilize the ground sufficiently so that rain will not dislodge the soil. Use one of the techniques in the table below:

Temporary Stabilization	Permanent Stabilization
• Temporary grass seed covered with straw or other mulches and tackifiers • Hydroseeding • Rolled erosion control products with or without temporary grass seed • Appropriately applied straw or other mulch • Plastic sheeting	• Permanent grass seed covered with straw or other mulches and tackifiers • Geotextile fabrics such as permanent soil reinforcement matting • Hydroseeding • Shrubs or other permanent plantings covered with mulch • Uniform and evenly distributed ground cover sufficient to restrain erosion • Structural methods such as concrete, asphalt or retaining walls • Rolled erosion control products with grass seed

POLYACRYLAMIDES (PAMS) AND FLOCCULANTS

1. Select flocculants that are appropriate for the soils being exposed during construction, selecting from the *NC DWR List of Approved PAMS/Flocculants*.
2. Apply flocculants at or before the inlets to Erosion and Sediment Control Measures.
3. Apply flocculants at the concentrations specified in the *NC DWR List of Approved PAMS/Flocculants* and in accordance with the manufacturer's instructions.
4. Provide ponding area for containment of treated Stormwater before discharging offsite.
5. Store flocculants in leak-proof containers that are kept under storm-resistant cover or surrounded by secondary containment structures.

EQUIPMENT AND VEHICLE MAINTENANCE

1. Maintain vehicles and equipment to prevent discharge of fluids.
2. Provide drip pans under any stored equipment.
3. Identify leaks and repair as soon as feasible, or remove leaking equipment from the project.
4. Collect all spent fluids, store in separate containers and properly dispose as hazardous waste (recycle when possible).
5. Remove leaking vehicles and construction equipment from service until the problem has been corrected.
6. Bring used fuels, lubricants, coolants, hydraulic fluids and other petroleum products to a recycling or disposal center that handles these materials.

LITTER, BUILDING MATERIAL AND LAND CLEARING WASTE

1. Never bury or burn waste. Place litter and debris in approved waste containers.
2. Provide a sufficient number and size of waste containers (e.g dumpster, trash receptacle) on site to contain construction and domestic wastes.
3. Locate waste containers at least 50 feet away from storm drain inlets and surface waters unless no other alternatives are reasonably available.
4. Locate waste containers on areas that do not receive substantial amounts of runoff from upland areas and does not drain directly to a storm drain, stream or wetland.
5. Cover waste containers at the end of each workday and before storm events or provide secondary containment. Repair or replace damaged waste containers.
6. Anchor all lightweight items in waste containers during times of high winds.
7. Empty waste containers as needed to prevent overflow. Clean up immediately if containers overflow.
8. Dispose waste off-site at an approved disposal facility.
9. On business days, clean up and dispose of waste in designated waste containers.

PAINT AND OTHER LIQUID WASTE

1. Do not dump paint and other liquid waste into storm drains, streams or wetlands.
2. Locate paint washouts at least 50 feet away from storm drain inlets and surface waters unless no other alternatives are reasonably available.
3. Contain liquid wastes in a controlled area.
4. Containment must be labeled, sized and placed appropriately for the needs of site.
5. Prevent the discharge of soaps, solvents, detergents and other liquid wastes from construction sites.

PORTABLE TOILETS

1. Install portable toilets on level ground, at least 50 feet away from storm drains, streams or wetlands unless there is no alternative reasonably available. If 50 foot offset is not attainable, provide relocation of portable toilet behind silt fence or place on a gravel pad and surround with sand bags.
2. Provide staking or anchoring of portable toilets during periods of high winds or in high foot traffic areas.
3. Monitor portable toilets for leaking and properly dispose of any leaked material. Utilize a licensed sanitary waste hauler to remove leaking portable toilets and replace with properly operating unit.

EARTHEN STOCKPILE MANAGEMENT

1. Show stockpile locations on plans. Locate earthen-material stockpile areas at least 50 feet away from storm drain inlets, sediment basins, perimeter sediment controls and surface waters unless it can be shown no other alternatives are reasonably available.
2. Protect stockpile with silt fence installed along toe of slope with a minimum offset of five feet from the toe of stockpile.
3. Provide stable stone access point when feasible.
4. Stabilize stockpile within the timeframes provided on this sheet and in accordance with the approved plan and any additional requirements. Soil stabilization is defined as vegetative, physical or chemical coverage techniques that will restrain accelerated erosion on disturbed soils for temporary or permanent control needs.

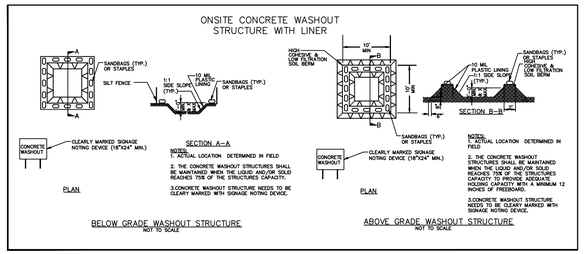

CONCRETE WASHOUTS

1. Do not discharge concrete or cement slurry from the site.
2. Dispose of, or recycle settled, hardened concrete residue in accordance with local and state solid waste regulations and at an approved facility.
3. Manage washout from mortar mixers in accordance with the above item and in addition place the mixer and associated materials on impervious barrier and within lot perimeter silt fence.
4. Install temporary concrete washouts per local requirements, where applicable. If an alternate method or product is to be used, contact your approval authority for review and approval. If local standard details are not available, use one of the two types of temporary concrete washouts provided on this detail.
5. Do not use concrete washouts for dewatering or storing defective curb or sidewalk sections. Stormwater accumulated within the washout may not be pumped into or discharged to the storm drain system or receiving surface waters. Liquid waste must be pumped out and removed from project.
6. Locate washouts at least 50 feet from storm drain inlets and surface waters unless it can be shown that no other alternatives are reasonably available. At a minimum, install protection of storm drain inlet(s) closest to the washout which could receive spills or overflow.
7. Locate washouts in an easily accessible area, on level ground and install a stone entrance pad in front of the washout. Additional controls may be required by the approving authority.
8. Install at least one sign directing concrete trucks to the washout within the project limits. Post signage on the washout itself to identify this location.
9. Remove leavings from the washout when at approximately 75% capacity to limit overflow events. Replace the tarp, sand bags or other temporary structural components when no longer functional. When utilizing alternative or proprietary products, follow manufacturer's instructions.
10. At the completion of the concrete work, remove remaining leavings and dispose of in an approved disposal facility. Fill pit, if applicable, and stabilize any disturbance caused by removal of washout.

HERBICIDES, PESTICIDES AND RODENTICIDES

1. Store and apply herbicides, pesticides and rodenticides in accordance with label restrictions.
2. Store herbicides, pesticides and rodenticides in their original containers with the label, which lists directions for use, ingredients and first aid steps in case of accidental poisoning.
3. Do not store herbicides, pesticides and rodenticides in areas where flooding is possible or where they may spill or leak into wells, stormwater drains, ground water or surface water. If a spill occurs, clean area immediately.
4. Do not stockpile these materials onsite.

HAZARDOUS AND TOXIC WASTE

1. Create designated hazardous waste collection areas on-site.
2. Place hazardous waste containers under cover or in secondary containment.
3. Do not store hazardous chemicals, drums or bagged materials directly on the ground.

NCG01 GROUND STABILIZATION AND MATERIALS HANDLING

EFFECTIVE: 04/01/19

CALL 48 HOURS BEFORE YOU DIG

NORTH CAROLINA ONE-CALL CENTER
1-800-632-4949

CITY OF RALEIGH - PLANS AUTHORIZED FOR CONSTRUCTION

ELECTRONIC APPROVAL: THIS APPROVAL IS BEING ISSUED ELECTRONICALLY. THIS APPROVAL IS VALID ONLY UPON THE SIGNATURE OF A CITY OF RALEIGH REVIEW OFFICER BELOW. THE CITY WILL RETAIN A COPY OF THE APPROVED PLANS. ANY WORK AUTHORIZED BY THIS APPROVAL MUST PROCEED IN ACCORDANCE WITH THE PLANS KEPT ON FILE WITH THE CITY. THIS ELECTRONIC APPROVAL MAY NOT BE EDITED ONCE ISSUED. ANY MODIFICATION TO THIS APPROVAL ONCE ISSUED WILL INVALIDATE THIS APPROVAL.

CITY OF RALEIGH DEVELOPMENT APPROVAL _____
RALEIGH WATER REVIEW OFFICER

ALL CONSTRUCTION SHALL BE IN ACCORDANCE WITH ALL TOWN OF ROLESVILLE, CITY OF RALEIGH AND WAKE COUNTY STANDARDS AND SPECIFICATIONS

© 2024 THIS DRAWING SHALL NOT BE REPRODUCED IN WHOLE OR IN PART WITHOUT WRITTEN PERMISSION OF FLM ENGINEERING, INC.

FLM ENGINEERING
POST OFFICE BOX 91727
RALEIGH, NORTH CAROLINA 27675
PHONE: 919.610.1051
FIRM NC LICENSE NUMBER C-4222

NORTH CAROLINA PROFESSIONAL SEAL 033775 ENGINEER JONATHAN D. FRAZIER 6/3/24

REVISION HISTORY

REV #	DESCRIPTION	DATE	BY

ORIGINAL PLAN SIZE: 24" X 36"

SCALE ADJUSTMENT

THIS BAR IS 1 INCH IN LENGTH ON ORIGINAL DRAWING
0 1"
IF IT IS NOT 1 INCH ON THIS SHEET, ADJUST YOUR SCALE ACCORDINGLY

SITE CONSTRUCTION PLANS

PINE GLO
414 S MAIN ST
ROLESVILLE, NC 27571

OPTIMAL GLO LLC

DATE:	06-03-2024
SCALE:	AS SHOWN
DESIGNED BY:	FLM
APPROVED BY:	FLM
PROJECT NO.:	24028

NCG01 GROUND STABILIZATION & MATERIAL HANDLING

C-18

SHEET 18 OF 18