CONSTRUCTION
INFRASTRUCTURE DRAWING SUBMITTAL
FOR
THE PRESERVE AT MOODY FARM

SITUATED AT

0 ROLESVILLE ROAD AND 0
AMAZON TRAIL

WAKE COUNTY, NORTH CAROLINA

#1- Put the Town of Rolesville project number "CID 24-09" on the cover sheet for all future submittals

#2- Please include:

- HGLs for all storm sewer; all HGLs must be within the pipe for a 10-year storm event and culverts must be designed for the 25-year storm event

- Gutter spread calculations

-Pre- and Post-Development maps and calculations

-Greenway profiles

SITE INFORMATION	
OWNER	HOLLINGSWORTH, W.C., JR. AND HOLLINGSWORTH, LAURA W. P.O.BOX 61 LOUISBURG NC 27549-0061 AND MOODY, BENNY LAWRENCE AND MOODY, JEFFREY LYNN 1716 ROLESVILLE RD, WAKE FOREST NC 27587-9677
REAL ESTATE ID	0048383 AND 0048422
PIN NUMBERS	1767284925 AND 1767284304
DEED BOOK	DB:017552 PG:02100 AND DB:014297 PG:01583
DEEDED ACREAGE	51.78 AC
EXISTING ZONING	R-3 CZ
TOTAL PROJECT ACREAGE	48.28 AC
GOVERNMENTAL USE	0.48 AC
AREA IN LOTS	24.69 AC
AREA IN ROW	6.54 AC
EXISTING ROW	0.27 AC
DEDICATED ROW	0.14 AC
TOTAL LOTS	82
MIN LOT SIZE	10,000 SF
MIN LOT WIDTH	65'
FRONT SETBACK	25'
REAR SETBACK	25'
SIDE SETBACK	10'
CORNER SETBACK	25'
DENSITY	1.6 UNIT/AC.
OPEN SPACE REQ.	10% / 5 AC.
OPEN SPACE PROVIDED	37% / 18.81 AC
ACTIVE REQUIRED	2.5 AC (50% OF 5 AC)
ACTIVE SHOWN	2.7 AC
LF OF PUBLIC STREETS	5,531 LF

GENERAL NOTES:
1. CONTRACTOR SHALL CONTACT NORTH CAROLINA ONE CALL (1-800-632-4949) TO LOCATE ALL EXISTING UTILITIES PRIOR TO THE START OF CONSTRUCTION.
2. CONTRACTOR SHALL VERIFY THE LOCATION AND DEPTH OF THE EXISTING UTILITIES AND NOTIFY THE PROJECT ENGINEER (919-469-1101) OF ANY CONFLICTS.
3. ALL BOUNDARY AND FIELD TOPOGRAPHY PROVIDED BY WITHERS & RAVENEL.
4. THE ZONING ENTITLEMENTS ACHIEVED/FACILITATING THIS PRELIM PLAT IS MA 21-05, APPROVED 12-7-2021 AS TOWN BOARD AGENDA ITEM B.2 ON THE CONSENT AGENDA; IT INCLUDES 5 CONDITIONS AND A CONCEPT PLAN DRAWING.
5. PLEASE SEE APPROVED WITH MA 21-05 BY TOWN BOARD OF COMMISSIONERS - SHEET NUMBER MA.
6. OPEN SPACE LOTS AND SCM'S WILL BE OWNED AND MAINTAINED BY HOA.
7. ALL PROPOSED STREETS WILL BE DEDICATED TO TOWN AND THUS OWNED AND MAINTAINED BY TOWN.

ZONING CONDITIONS (CASE # MA-21-05)

1. PERMITTED USE LIMITED TO "DWELLING - SINGLE FAMILY."
2. ALL DWELLINGS TO BE CONSTRUCTED ON RAISED FOUNDATIONS WITH CRAWLSPACES. NO ON-SLAB CONSTRUCTION.
3.DEVELOPMENT TO INCORPORATE A PUBLIC GREENWAY AS SHOWN ON THE SKETCH PLAN INCORPORATING OPTION 2 TOGETHER WITH WAYFINDING SIGNAGE AND CONSTRUCTION OF A 10' OFF-SITE MULTI-USE PATH ALONG WOODLYN PARK DRIVE, CONNECTING THIS GREENWAY TO THE PROPOSED KALAS FALLS GREENWAY.
4. PRIOR TO COMPLETION OF THE ON-SITE GREENWAY, A 6' SOLID BOARD FENCE SHALL BE ERECTED ALONG THE PROPERTY BOUNDARY LINE FRONTING THE EASTERN TERMINUS OF THE GREENWAY AND BORDERING THE SHORE PROPERTY (PIN . 1767-38-1953) .
5. ON-SITE CONSTRUCTION SHALL NOT COMMENCE UNTIL THE KALAS FALLS ROLESVILLE ROAD WIDENING PROJECT IS COMPLETE.

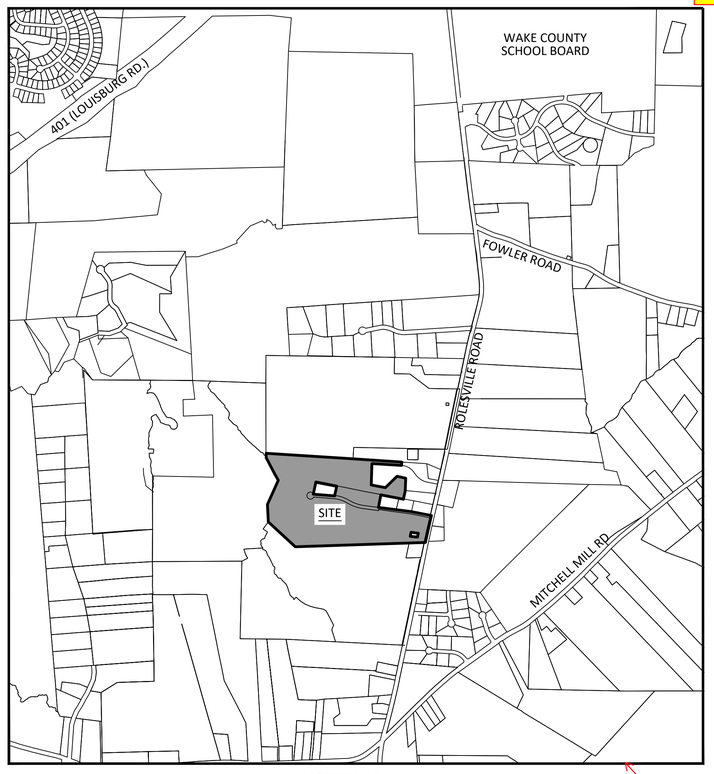

VICINITY MAP
SCALE: 1"=1000'

#3- Add a north arrow

THESE IMPROVEMENTS SHALL BE IN ACCORDANCE WITH THE FOLLOWING DRAWINGS AND THE STANDARD SPECIFICATIONS OF THE CITY OF RALEIGH, WAKE COUNTY, TOWN OF ROLESVILLE AND NCDOT.

REQUIRED APPROVALS	
PERMIT	PERMIT NUMBER:
POND REMOVAL PERMIT	SEC-063778-2021
TOWN OF ROLESVILLE PROJECT NUMBER	PR22-01
TOWN OF ROLESVILLE CONSTRUCTION DOCUMENTS	TBD
WAKE COUNTY EROSION CONTROL	TBD
WAKE COUNTY STORMWATER	TBD
CITY OF RALEIGH WATER	TBD
CITY OF RALEIGH SEWER	TBD

PROPRTY OWNER:	HOLLINGSWORTH, W.C., JR. AND HOLLINGSWORTH, LAURA W. P.O.BOX 61 LOUISBURG NC 27549-0061 PIN 1767284925 AND MOODY, BENNY LAWRENCE AND MOODY, JEFFREY LYNN 1716 ROLESVILLE RD, WAKE FOREST NC 27587-9677 PIN: 1767284304
DEVELOPER:	CARUSO HOMES CONTACT: CHISTY BECK 206 HIGH HOUSE RD STE 205 CARY, NC 27513 919-678-5698
SURVEYOR:	WITHERS RAVENEL CONTACT: MATT TIMLIN 115 MACKENAN DRIVE CARY, NC 27511 919-469-3340
BUFFER/WETLAND:	WITHERS RAVENEL CONTACT: TROY BEASLEY 115 MACKENAN DRIVE CARY, NC 27511 919-469-3340

EROSION CONTROL, STORMWATER AND FLOODPLAIN MANAGEMENT
APPROVED
EROSION CONTROL ☐ S-_____
STORMWATER MGMT. ☐ S-_____
FLOOD STUDY ☐ S-_____
DATE_____
LAND QUALITY SECTION
ENVIRONMENTAL CONSULTANT SIGNATURE

NOTE:
TA 20-01 WAS ADAPTED 9-15-20, PERMITTING THE " DWELLING- SINGLE FAMILY DETACHED" USE IN THE R-3 DISTRICT, AND ESTABLISHED: MINIMUM LOT AREA OF 10,000 SF; MINIMUM LOT WIDTH 65'; FRONT YARD SETBACK OF 25'; SIDE YARD SETBACK OF 10'; CORNER YARD SETBACK OF 15'; REAR YARD SETBACK OF 25'

CITY OF RALEIGH - PLANS AUTHORIZED FOR CONSTRUCTION

Electronic Approval: This approval is being issued electronically. This approval is valid only upon the signature of a City of Raleigh Review Officer below. The City will retain a copy of the approved plans. Any work authorized by this approval must proceed in accordance with the plans kept on file with the City. This electronic approval may not be edited once issued. Any modification to this approval once issued will invalidate this approval.

City of Raleigh Development Approval _____

Raleigh Water Review Officer

North Carolina 811
*** 3 Days Before Digging ***
North Carolina 811
811 or 1-800-632-4949
Remote Ticket Entry
http://nc811.org/remoteticketentry.htm

SHEET INDEX	
SHEET NUMBER	SHEET TITLE
CVR	COVER
C1.0	OVERALL EXISTING CONDITIONS AND DEMOLITION PLAN
C2.0	GENERAL NOTES
C2.1	GENERAL NOTES
C3.0	OVERALL EC STAGE 1
C3.1	EC STAGE 1 - AREA A
C3.2	EC STAGE 1 - AREA B
C3.3	EC STAGE 1 - AREA C
C3.4	EC STAGE 1 - AREA D
C3.5	OVERALL EC STAGE 2
C3.6	EC STAGE 2 - AREA A
C3.7	EC STAGE 2 - AREA B
C3.8	EC STAGE 2 - AREA C
C3.9	EC STAGE 2 - AREA D
C3.10	NPDES PLAN
C4.0	OVERALL SITE PLAN
C4.1	SITE PLAN A
C4.2	SITE PLAN B
C4.3	SITE PLAN C
C4.4	SITE PLAN D
C4.5	PHASING PLAN
C4.6	OPEN SPACE AND LAND USE PLAN
C5.0	OVERALL DRAINAGE PLAN
C5.1	DRAINAGE PLAN A
C5.2	DRAINAGE PLAN B
C5.3	DRAINAGE PLAN C
C5.4	DRAINAGE PLAN D
C5.5	POST DRAINAGE AREA MAP
C6.0	OVERALL UTILITIES PLAN
C6.1	UTILITY PLAN A
C6.2	UTILITY PLAN B
C6.3	UTILITY PLAN C
C6.4	UTILITY PLAN D
C7.0	SCHEDULE
C7.1	SCHEDULE
C8.0	SCM 1
C8.1	SCM 2
C8.2	SCM 3
C8.3	SCM 4
C8.4	SCM 5
C8.5	CULVERT CROSSING
C9.0	MULBERRY PLAN AND PROFILE
C9.1	MULBERRY PLAN AND PROFILE
C10.0	TANSLEY CREST LOOP PLAN AND PROFILE
C11.0	VINTAGE VINERY CT PLAN AND PROFILE
C12.0	CUL-DE-SAC AND STUB PLAN AND PROFILES
C13.0	SEWER OUTFALL
C13.1	SEWER OUTFALL
C13.2	SEWER OUTFALL
C13.3	SEWER OUTFALL
C14.0	STORM OUTFALL PLAN AND PROFILES
CD1	EROSION CONTROL DETAILS
CD2	EROSION CONTROL DETAILS
CD3	EROSION CONTROL DETAILS
CD4	EROSION CONTROL DETAILS
CD5	EROSION CONTROL DETAILS
CD6	UTILITY DETAILS
CD7	UTILITY DETAILS
CD8	UTILITY DETAILS
CD9	UTILITY DETAILS
CD10	UTILITY DETAILS
CD11	DRAINAGE DETAILS
CD12	DRAINAGE DETAILS
CD13	SITE DETAILS
CD14	SITE DETAILS
CD15	SITE DETAILS
CD16	SITE DETAILS
L1	LANDSCAPE PLAN
L2	BUFFER PLAN
L3	PLANTING NOTES AND DETAILS

AMERICAN Engineering
American Engineering Associates - Southeast, P.A.
4020 Westchase Boulevard, Suite 450
Raleigh, NC 27607
919-469-1101

NORTH CAROLINA AMERICAN ENGINEERING ASSOCIATES SOUTHEAST C-3881 CERTIFICATE OF AUTHORIZATION

PRELIMINARY

PRELIMINARY
DO NOT USE FOR CONSTRUCTION
NORTH CAROLINA PROFESSIONAL ENGINEER SEAL 045202 JACOB P. KLEIN
Digitally signed by Jacob P. Klein
DN: cn=Jacob P. Klein, c=US, o=American Engineering Associates, ou=Engineering, email=jklein@aeassociates.com
Date: 2024.12.02 15:42:52 -05'00'
FOR INFORMATION ONLY

NO.	DATE	REVISION:

STIPULATION FOR REUSE

THIS DRAWING WAS PREPARED FOR USE ON THE SPECIFIC SITE, NAMED HEREON, CONTEMPORANEOUSLY WITH ITS ISSUE DATE AS LISTED, HEREON, AND IT IS NOT SUITABLE FOR USE ON A DIFFERENT PROJECT SITE OR AT A LATER TIME. USE OF THIS DRAWING FOR REFERENCE OR EXAMPLE ON ANOTHER PROJECT REQUIRES THE SERVICES OF PROPERLY LICENSED ARCHITECTS AND ENGINEERS. REPRODUCTION OF THIS DRAWING FOR REUSE ON ANOTHER PROJECT IS NOT AUTHORIZED AND MAY BE CONTRARY TO THE LAW.

THE PRESERVE AT MOODY FARM
ROLESVILLE ROAD
WAKE COUNTY, NC

JOB NUMBER: 21-002
CHECKED BY: JK
DRAWN BY: RC & SM
DATE: 12/02/2024

SHEET TITLE:
COVER

SHEET NO.:
CVR

Z:\Jobs\21-002 Moody Development Tract (R21000)\Dwg_Working Dwgs\Construction Set\01-CVR.dwg
December 2, 2024

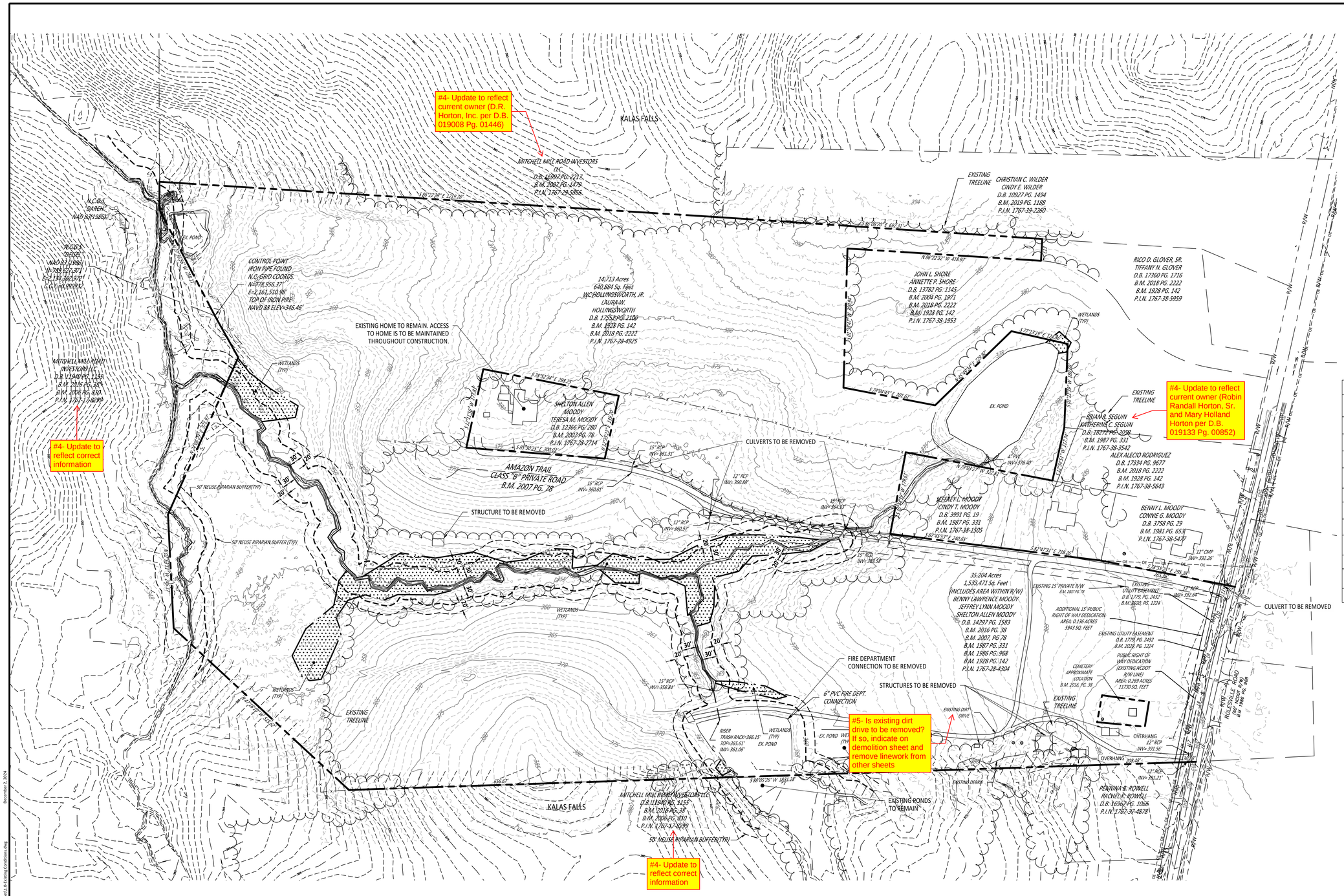

EXISTING LEGEND	
	WETLANDS AREA
	EXISTING BOUNDARY
	EXISTING TREE LINE
	EXISTING TOPOGRAPHY
	50' NEUSE RIPARIAN BUFFER
	BUFFER ZONE 1 AND 2
	TOP OF CREEK
	BOTTOM OF CREEK
	POND ELEVATION BOUNDARY
	EXISTING STORM PIPE
	EXISTING ROAD EASEMENT
	EXISTING BUILDING

LINE TABLE		
LINE	BEARING	DISTANCE
L1	N 29°16'51" W	103.15'
L2	S 13°14'13" W	30.80'
L3	S 13°11'52" W	75.23'
L4	S 12°45'00" W	105.78'
L5	S 12°20'07" W	102.35'
L6	S 11°47'14" W	73.35'
L7	N 11°47'14" E	80.81'
L8	N 12°20'07" E	102.60'
L9	N 12°45'00" E	106.01'
L10	N 13°11'52" E	75.35'
L11	N 13°14'13" E	29.69'
L12	N 00°09'21" W	60.99'
L13	S 03°23'06" W	47.18'

GRAPHIC SCALE

100 0 50 100 200 400

(IN FEET)
1 inch =100

GENERAL NOTES:

1. TOPO SHOWN ON THIS SHEET IS 1' CONTOURS AND IS FIELD TOPOGRAPHY.

CITY OF RALEIGH - PLANS AUTHORIZED FOR CONSTRUCTION

Electronic Approval: This approval is being issued electronically. This approval is valid only upon the signature of a City of Raleigh Review Officer below. The City will retain a copy of the approved plans. Any work authorized by this approval must proceed in accordance with the plans kept on file with the City. This electronic approval may not be edited once issued. Any modification to this approval once issued will invalidate this approval.

City of Raleigh Development Approval _____

Raleigh Water Review Officer

North Carolina 811 Call Before You Dig!

*** 3 Days Before Digging ***
North Carolina 811
811 or 1-800-632-4949
Remote Ticket Entry
http://nc811.org/remoteticketentry.htm

AMERICAN Engineering
American Engineering Associates - Southeast, P.A.
4020 Westchase Boulevard, Suite 450
Raleigh, NC 27607
919-469-1101

NORTH CAROLINA AMERICAN ENGINEERING ASSOCIATES SOUTHEAST C-3881 CERTIFICATE OF AUTHORIZATION

PRELIMINARY

PRELIMINARY
DO NOT USE FOR CONSTRUCTION
Digitally signed by JACOB P. KLEIN
DN: c=US, o=AMERICAN ENGINEERING ASSOCIATES SOUTHEAST, cn=JACOB P. KLEIN, 1.2.840.113549.1.9.1=jacob.klein@amerengassociates.com
2024.12.02 15:56:00 -05'00'
FOR INFORMATION ONLY

NO.	DATE	REVISION:

STIPULATION FOR REUSE

THIS DRAWING WAS PREPARED FOR USE ON THE SPECIFIC SITE, NAMED HEREON, CONTEMPORANEOUSLY WITH ITS ISSUE DATE AS LISTED, HEREON, AND IT IS NOT SUITABLE FOR USE ON A DIFFERENT PROJECT SITE OR AT A LATER TIME. USE OF THIS DRAWING FOR REFERENCE OR EXAMPLE ON ANOTHER PROJECT REQUIRES THE SERVICES OF PROPERLY LICENSED ARCHITECTS AND ENGINEERS. REPRODUCTION OF THIS DRAWING FOR REUSE ON ANOTHER PROJECT IS NOT AUTHORIZED AND MAY BE CONTRARY TO THE LAW.

THE PRESERVE AT MOODY FARM

ROLESVILLE ROAD
WAKE COUNTY, NC

JOB NUMBER: 21-002
CHECKED BY: JK
DRAWN BY: RC & SM
DATE: 12/02/2024

SHEET TITLE:

OVERALL EXISTING CONDITIONS AND DEMOLITION PLAN

SHEET NO.:

C1.0

December 2, 2024

Z:\Jobs\21-002 Moody Development Tract (R21000232)\eng_Working Dwgs\Construction Set\1.0-Existing Conditions.dwg

#6- Correct the conflicting notes

#7- Sheet not included in set

GENERAL NOTES:

A. ALL TREE PROTECTION FENCING SHALL BE MAINTAINED UNTIL ALL SITE WORK IS COMPLETED. THE FENCING SHALL BE REMOVED PRIOR TO THE FINAL SITE INSPECTION FOR THE CERTIFICATE OF OCCUPANCY (CO).
B. ALL TREE PROTECTION FENCING SHALL BE MAINTAINED UNTIL ALL SITE WORK IS COMPLETED. THE FENCING SHALL REMAIN UNTIL ISSUANCE OF CERTIFICATE OF OCCUPANCY (CO).
C. WITHIN THE SIGHT TRIANGLES SHOWN ON ALL SITE PLAN AND LANDSCAPE PLAN SHEETS, NO OBSTRUCTION BETWEEN 2 FEET AND 8 FEET IN HEIGHT ABOVE THE CURB LINE ELEVATION SHALL BE LOCATED IN WHOLE OR PART. OBSTRUCTIONS INCLUDE, BUT ARE NOT LIMITED TO, ANY BERM, FOLIAGE, FENCE, WALL SIGN, PARKED CAR, OR OTHER OBJECT. ALL STREET TREES FALLING WITHIN THE SIGHT TRIANGLES SHOWN ON THIS PLAN SHALL BE LIMBED UP BETWEEN 2 FEET AND 8 FEET IN HEIGHT ABOVE THE CURB LINE ELEVATION.
D. MINIMUM CORNER CLEARANCE FROM THE CURB LINE OF INTERSECTING STREETS SHALL BE AT LEAST 20 FEET FROM THE POINT OF TANGENCY OF THE CURB. NO DRIVEWAYS SHALL ENCROACH ON THIS MINIMUM CORNER CLEARANCE.
E. ALL STREETS SHOWN ON THESE PLANS HAVE FULL WIDTH OF RIGHT-OF-WAY CLEARED AND GRADED WITHIN 50 FEET OF ALL STREET INTERSECTIONS. THE FULL WIDTH OF RIGHT-OF-WAY SHALL BE CLEARED AND GRADED ALONG ALL MAJOR, MINOR AND SENSITIVE AREA THOROUGHFARES.
F. WHEEL CHAIR ACCESS RAMPS WILL BE PROVIDED IN ACCORDANCE WITH STANDARD DRAWING SHOWN ON SHEET CD19. WHERE SIDEWALK IS NOT REQUIRED ALONG THE PUBLIC RIGHT-OF-WAY, CURB IS TO BE DEPRESSED AT ALL RAMP LOCATIONS SHOWN ON THE STANDARD DETAIL.
G. ALL INDIVIDUAL LOTS SHALL HAVE AN EROSION CONTROL PLAN SUBMITTED PRIOR TO CONSTRUCTION OF HOUSES THERE UPON. IF MULTIPLE LOTS WITH A TOTAL DISTURBED AREA OF MORE THAN 12,000 SF ARE TO BE BUILT UPON AT ONE TIME, A COORDINATED EROSION CONTROL PLAN SHALL BE SUBMITTED.
H. ALL PUBLIC WATER AND SEWER MATERIALS AND CONSTRUCTION SHALL BE IN ACCORDANCE WITH THE CITY OF RALEIGH STANDARDS AND SPECIFICATIONS.
I. CONTRACTOR SHALL CONTACT NORTH CAROLINA ONE CALL (1-800-632-4949) TO LOCATE ALL EXISTING UTILITIES PRIOR TO THE START OF CONSTRUCTION.
J. CONTRACTOR SHALL VERIFY THE LOCATION AND DEPTH OF THE EXISTING UTILITIES AND NOTIFY THE PROJECT ENGINEER (919-469-1101) OF ANY CONFLICTS.
K. ALL BOUNDARY AND FIELD TOPOGRAPHY PROVIDED BY WITHERS & RAVENEL.
L. PHASE LINES SHOWN ARE SPECIFICALLY FOR ESTABLISHING LOTS THROUGH PLATTING PROCESS.

STANDARD UTILITY NOTES (AS APPLICABLE):

1. ALL MATERIALS & CONSTRUCTION METHODS SHALL BE IN ACCORDANCE WITH CITY OF RALEIGH DESIGN STANDARDS, DETAILS & SPECIFICATIONS (REFERENCE: CORPUD HANDBOOK, CURRENT EDITION)

2. UTILITY SEPARATION REQUIREMENTS:

   A) A DISTANCE OF 100' SHALL BE MAINTAINED BETWEEN SANITARY SEWER & ANY PRIVATE OR PUBLIC WATER SUPPLY SOURCE SUCH AS AN IMPOUNDED RESERVOIR USED AS A SOURCE OF DRINKING WATER. IF ADEQUATE LATERAL SEPARATION CANNOT BE ACHIEVED, FERROUS SANITARY SEWER PIPE SHALL BE SPECIFIED & INSTALLED TO WATERLINE SPECIFICATIONS. HOWEVER, THE MINIMUM SEPARATION SHALL NOT BE LESS THAN 25' FROM A PRIVATE WELL OR 50' FROM A PUBLIC WELL

   B) WHEN INSTALLING WATER &/OR SEWER MAINS, THE HORIZONTAL SEPARATION BETWEEN UTILITIES SHALL BE 10'. IF THIS SEPARATION CANNOT BE MAINTAINED DUE TO EXISTING CONDITIONS, THE VARIATION ALLOWED IS THE WATER MAIN IN A SEPARATE TRENCH WITH THE ELEVATION OF THE WATER MAIN AT LEAST 18" ABOVE THE TOP OF THE SEWER & MUST BE APPROVED BY THE PUBLIC UTILITIES DIRECTOR. ALL DISTANCES ARE MEASURED FROM OUTSIDE DIAMETER TO OUTSIDE DIAMETER

   C) WHERE IT IS IMPOSSIBLE TO OBTAIN PROPER SEPARATION, OR ANYTIME A SANITARY SEWER PASSES OVER A WATERMAIN, DIP MATERIALS OR STEEL ENCASEMENT EXTENDED 10' ON EACH SIDE OF CROSSING MUST BE SPECIFIED & INSTALLED TO WATERLINE SPECIFICATIONS

   D) 5.0' MINIMUM HORIZONTAL SEPARATION IS REQUIRED BETWEEN ALL SANITARY SEWER & STORM SEWER FACILITIES, UNLESS DIP MATERIAL IS SPECIFIED FOR SANITARY SEWER MAINTAIN 18" MIN. VERTICAL SEPARATION AT ALL WATERMAIN & RCP STORM DRAIN CROSSINGS; MAINTAIN 24" MIN. VERTICAL SEPARATION AT ALL SANITARY SEWER & RCP STORM DRAIN CROSSINGS. WHERE ADEQUATE SEPARATIONS CANNOT BE ACHIEVED, SPECIFY DIP MATERIALS & A CONCRETE CRADLE HAVING 6" MIN. CLEARANCE (PER CORPUD DETAILS W-41 & S-49)

   E) ALL OTHER UNDERGROUND UTILITIES SHALL CROSS WATER & SEWER FACILITIES WITH 18" MIN. VERTICAL SEPARATION REQUIRED

3. ANY NECESSARY FIELD REVISIONS ARE SUBJECT TO REVIEW & APPROVAL OF AN AMENDED PLAN &/OR PROFILE BY THE CITY OF RALEIGH PUBLIC UTILITIES DEPARTMENT PRIOR TO CONSTRUCTION

4. CONTRACTOR SHALL MAINTAIN CONTINUOUS WATER & SEWER SERVICE TO EXISTING RESIDENCES & BUSINESSES THROUGHOUT CONSTRUCTION OF PROJECT. ANY NECESSARY SERVICE INTERRUPTIONS SHALL BE PRECEDED BY A 24 HOUR ADVANCE NOTICE TO THE CITY OF RALEIGH PUBLIC UTILITIES DEPARTMENT

5. 3.0' MINIMUM COVER IS REQUIRED ON ALL WATER MAINS & SEWER FORCEMAINS. 4.0' MINIMUM COVER IS REQUIRED ON ALL REUSE MAINS

6. IT IS THE DEVELOPER'S RESPONSIBILITY TO ABANDON OR REMOVE EXISTING WATER & SEWER SERVICES NOT BEING USED IN REDEVELOPMENT OF A SITE UNLESS OTHERWISE DIRECTED BY THE CITY OF RALEIGH PUBLIC UTILITIES DEPARTMENT. THIS INCLUDES ABANDONING TAP AT MAIN & REMOVAL OF SERVICE FROM ROW OR EASEMENT PER CORPUD HANDBOOK PROCEDURE

7. INSTALL ¾" COPPER* WATER SERVICES WITH METERS LOCATED AT ROW OR WITHIN A 2'X2' WATERLINE EASEMENT IMMEDIATELY ADJACENT. NOTE: IT IS THE APPLICANT'S RESPONSIBILITY TO PROPERLY SIZE THE WATER SERVICE FOR EACH CONNECTION TO PROVIDE ADEQUATE FLOW & PRESSURE

8. INSTALL 4" PVC* SEWER SERVICES @ 1.0% MINIMUM GRADE WITH CLEANOUTS LOCATED AT ROW OR EASEMENT LINE & SPACED EVERY 75 LINEAR FEET MAXIMUM

9. PRESSURE REDUCING VALVES ARE REQUIRED ON ALL WATER SERVICES EXCEEDING 80 PSI; BACKWATER VALVES ARE REQUIRED ON ALL SANITARY SEWER SERVICES HAVING BUILDING DRAINS LOWER THAN 1.0' ABOVE THE NEXT UPSTREAM MANHOLE

10. ALL ENVIRONMENTAL PERMITS APPLICABLE TO THE PROJECT MUST BE OBTAINED FROM NCDWQ, USACE &/OR FEMA FOR ANY RIPARIAN BUFFER, WETLAND &/OR FLOODPLAIN IMPACTS (RESPECTIVELY) PRIOR TO CONSTRUCTION.

11. NCDOT / RAILROAD ENCROACHMENT AGREEMENTS ARE REQUIRED FOR ANY UTILITY WORK (INCLUDING MAIN EXTENSIONS & SERVICE TAPS) WITHIN STATE OR RAILROAD ROW PRIOR TO CONSTRUCTION

12. GREASE INTERCEPTOR / OIL WATER SEPARATOR SIZING CALCULATIONS & INSTALLATION SPECIFICATIONS SHALL BE APPROVED BY THE CORPUD FOG PROGRAM COORDINATOR PRIOR TO ISSUANCE OF A BUILDING PERMIT.

13. CROSS-CONNECTION CONTROL PROTECTION DEVICES ARE REQUIRED BASED ON DEGREE OF HEALTH HAZARD INVOLVED AS LISTED IN APPENDIX-B OF THE RULES GOVERNING PUBLIC WATER SYSTEMS IN NORTH CAROLINA. THESE GUIDELINES ARE THE MINIMUM REQUIREMENTS. THE DEVICES SHALL MEET AMERICAN SOCIETY OF SANITARY ENGINEERING (ASSE) STANDARDS OR BE ON THE UNIVERSITY OF SOUTHERN CALIFORNIA APPROVAL THE DEVICES SHALL BE INSTALLED AND TESTED (BOTH INITIAL AND PERIODIC TESTING THEREAFTER) IN ACCORDANCE WITH THE MANUFACTURER'S RECOMMENDATIONS OR THE LOCAL CROSS-CONNECTION CONTROL PROGRAM, WHICHEVER IS MORE STRINGENT.

NOTES FOR CONSTRUCTION:

1. PLANS FOR INFRASTRUCTURE ONLY.
2. ALL CONSTRUCTION MUST BE PERFORMED IN ACCORDANCE WITH CURRENT CITY OF RALEIGH STANDARD SPECS AND DETAILS, WAKE COUNTY SPECIFICATIONS, NCDOT SPECIFICATIONS AND TOWN OF ROLESVILLE SPECIFICATIONS.
3. CONTRACTOR SHALL BE RESPONSIBLE FOR VERIFICATION OF EXISTING CONDITIONS. CONTRACTOR SHALL NOTIFY ENGINEER OF DISCREPANCIES BETWEEN FIELD CONDITIONS AND THESE DRAWINGS.
4. THERE ARE NO 100 YEAR FLOOD PLAINS PER FEMA MAP WITHIN PROPERTY.
5. CONTRACTOR WILL KEEP STREETS CLEAN AT ALL TIMES, OR A WASH STATION WILL BE REQUIRED.
6. ALL CATCH BASINS SHALL HAVE INLET PROTECTION.
7. ALL CUT AND FILL SLOPES MUST BE STABILIZED WITHIN 14 DAYS OF ANY PHASE OF GRADING, WITH SOME SLOPES TO BE STABALIZED WITHIN 7 DAYS AS SHOWN ON CHART TO THE LEFT AND ON THE EC SHEETS..
8. TREE PROTECTION FENCING ON THIS PROJECT WILL BE INSTALLED AND INSPECTED BEFORE THE GRADING PERMIT IS ISSUED.
9. A PRE-CONSTRUCTION CONFERENCE MAY BE REQUIRED BEFORE GRADING PERMIT IS ISSUED. PERMANENT GROUND COVER WILL BE ESTABLISHED IN 15 WORKING DAYS OR 90 CALENDAR DAYS WHICHEVER IS SHORTER.
10. THE AREA DESIGNATED SHALL BE USED FOR TOPSOIL STOCKPILE.
11. THIS PROJECT IS IN THE NEUSE RIVER WATERSHED.
12. WETLANDS ON THIS PROJECT ARE AS SHOWN.
13. MINIMUM CORNER CLEARANCE FROM THE CURB LINE OF INTERSECTING STREETS SHALL BE AT LEAST TWENTY (20) FEET FROM THE POINT OF TANGENCY.

EROSION & SEDIMENT CONTROL NOTES:

STAGE 1 E&SC CONSTRUCTION SEQUENCE:

1. THE OWNER SHALL OBTAIN NCG01 PERMIT AND PAY ANY FEE THAT MAYBE ASSOCIATED WITH THIS PERMIT.

2. SCHEDULE A PRE-CONSTRUCTION CONFERENCE WITH THE NORTH CAROLINA DEPARTMENT OF ENVIRONMENTAL QUALITY (NCDEQ)/TOWN OF ROLESVILLE, OBTAIN LAND DISTURBING PERMIT.

3. ENSURE THAT ALL LIMITS OF DISTURBANCE, SURFACE WATERS, AND RIPARIAN BUFFERS ARE FLAGGED PRIOR TO INSTALLATION OF EROSION CONTROL MEASURES. WETLANDS PRESENT ON SITE ARE NOT TO BE IMPACTED DURING CONSTRUCTION ACTIVITIES.

4. TREE PROTECTION FENCES, SILT FENCES AND CONSTRUCTION ENTRANCES SHALL BE INSTALLED AS SHOWN ON THE EROSION CONTROL PLANS. CLEAR ONLY AS NECESSARY TO INSTALL THESE DEVICES INCLUDING STOCKPILE LOCATIONS. STOCKPILE LOCATIONS SHOULD BE ENCLOSED BY SILT FENCE AS SHOWN ON THE PLANS. SEED ALL RESULTING BARE AREAS IMMEDIATELY AFTER CONSTRUCTION.

5. CONSTRUCT SCMs #1-#5 AS SEDIMENT BASINS BY OMITTING FOREBAY DIVIDERS AND CONNECTING SKIMMERS TO THE DRAINPIPE. THE FINAL PIPE AND STRUCTURE FOR EACH POND IS TO BE INSTALLED WITH STAGE 1 EROSION CONTROL AND SERVE THE TEMPORARY SEDIMENT BASINS AND ACT AS INLETS FOR THE TEMPORARY DIVERSION DITCHES. SEE EROSION AND SEDIMENT CONTROL PLANS FOR MORE DETAIL. FOLLOWING THE COMPLETION OF THE INITIAL CONSTRUCTION STAGE, THE INLET STRUCTURES MUST BE CLEANED AND HAVE INLET PROTECTION INSTALLED AS SHOWN ON THE STAGE 2 EROSION AND SEDIMENT CONTROL PLANS. THE SEDIMENT BASINS SHALL BE FULLY CONSTRUCTED PRIOR TO THE INSTALLATION OF ANY TEMPORARY DIVERSION DITCHES.

6. CONTRACTOR TO INSTALL BRIDGEMAT AS SHOWN ON EROSION AND SEDIMENT CONTROL PLANS FOR CREEK CROSSING. SEE SHEET C8.5 FOR DETAILED CREEK CROSSING CONSTRUCTION SEQUENCE.

7. CALL FOR INSPECTION BY NCDEQ/TOWN OF ROLESVILLE FOR APPROVAL BEFORE PROCEEDING TO STAGE 2 CONSTRUCTION.

8. ADDITIONAL MEASURES OR DITCH EXTENSIONS MAY BE REQUIRED BY THE NCDEQ/TOWN OF ROLESVILLE EROSION CONTROL FIELD INSPECTOR TO ROUTE RUNOFF TO SEDIMENT BASINS BASED ON FIELD CONDITIONS AND THESE MEASURES SHALL BE INSTALLED UPON THE INSPECTOR'S DETERMINATION.

STAGE 2 E&SC CONSTRUCTION SEQUENCE:

1. GENERAL SITE GRADING MAY BEGIN.

2. INSTALL STORM DRAINAGE PIPE SYSTEMS.

3. AS EACH CATCH BASIN OR YARD INLET IS INSTALLED, IT SHALL HAVE INLET PROTECTION INSTALLED. THIS IS TO REMAIN IN PLACE UNTIL THE DRAINAGE AREA(S) HAVE BEEN STABILIZED OR PAVED.

4. CLEAN SEDIMENT BASINS WHEN ONE-HALF FULL.

5. SEED AND MULCH DENUDED AREA INCLUDING ANY CUT/FILL SLOPES WITHIN FOURTEEN (14) DAYS AFTER FINISHED GRADES ARE ESTABLISHED.

6. MAINTAIN SOIL EROSION CONTROL MEASURES UNTIL PERMANENT GROUND IS ESTABLISHED.

7. UTILITIES (WATER, ELECTRIC, GAS, CABLE TV, TELEPHONE, ETC.) WILL BE INSTALLED DURING THIS PHASE.

8. WHEN ALL CONTRIBUTORY AREAS ARE STABILIZED, OBTAIN APPROVAL FROM THE NCDEQ/TOWN OF ROLESVILLE TO CONVERT THE SEDIMENT BASINS (SB) TO PERMANENT STORMWATER CONTROL MEASURES (SCM). SEE RECOMMENDED INSTRUCTIONS TO CONVERT SEDIMENT BASINS TO PERMANENT STORMWATER CONTROL MEASURES ON THIS SHEET OF THE PROJECT CONSTRUCTION DRAWINGS.

9. REQUEST APPROVAL BY NCDEQ/TOWN OF ROLESVILLE AFTER VEGETATION IS ESTABLISHED TO REMOVE REMAINING EROSION CONTROL MEASURES.

10. REMOVE REMAINING SOIL EROSION CONTROL MEASURES AND STABILIZE THE RESULTING BARE AREAS. CONTACT NCDEQ/TOWN OF ROLESVILLE TO REQUEST FINAL INSPECTION TO CLOSE LAND DISTURBANCE PERMIT.

11. THE OWNER IS TO FINALIZE THE NCG01 PERMIT.

REQUIRED WAKE COUNTY BASIN REMOVAL SEQUENCE

1. SCHEDULE A SITE MEETING WITH THE ENVIRONMENTAL CONSULTANT TO DETERMINE IF A BASIN CAN BE REMOVED. INSTALL SILT FENCING OR OTHER TEMPORARY EROSION CONTROL MEASURES AS NEEDED PRIOR TO REMOVAL OF THE BASIN.
2. REMOVE BASIN(S) AND ASSOCIATED TEMPORARY DIVERSION DITCHES. IF CULVERT PIPES NEED TO BE EXTENDED, PERFORM THIS OPERATION AT THIS TIME. FINE GRADE AREA IN PREPARATION FOR SEEDING.
3. PERFORM SEEDBED PREPARATION, SEED, MULCH AND ASPHALT TACK ANY RESULTING BARE AREAS IMMEDIATELY.
4. INSTALL VELOCITY DISSIPATORS AND/OR LEVEL SPREADERS AS REQUIRED ON THE EROSION CONTROL PLAN.
5. WHEN SITE IS FULLY STABILIZED, CALL ENVIRONMENTAL CONSULTANT FOR APPROVAL OF REMOVING REMAINING TEMPORARY EROSION CONTROL MEASURES AND ADVICE ON WHEN SITE CAN BE ISSUED A CERTIFICATE OF COMPLETION.

NOTE: A MEETING SHOULD ALSO BE SCHEDULED WITH THE ENVIRONMENTAL CONSULTANT TO DETERMINE WHEN A BASIN MAY BE CONVERTED FOR STORMWATER USE. SOME MUNICIPALITIES MAY ALSO REQUIRE THIS.

SCM CONVERSION SEQUENCE:

1. WHEN ALL CONTRIBUTORY AREAS TO THE STORMWATER CONTROL MEASURE (SCM) HAVE BEEN STABILIZED CONTACT THE EROSION CONTROL OFFICER FOR PERMISSION TO CONVERT THE SEDIMENT BASIN (SB) TO A SCM.

2. REMOVE ALL SEDIMENT FROM THE BASIN AND RESTORE GRADES TO DESIGNED CONFIGURATION, IF NEEDED.

3. CONSTRUCT FOREBAY DIVIDERS AS SHOWN ON THE PLANS.

4. REMOVE TEMPORARY BAFFLES FROM THE BASIN.

5. MAKE ANY REPAIRS NECESSARY TO THE OUTLET STRUCTURE, OUTLET PIPE, EMERGENCY OVERFLOW, ETC. EXAMINE RIP-RAP TO SEE IF REFRESHING OR CLEANING OF ROCK IS NECESSARY.

6. INSTALL SHELF PLANTINGS AS SHOWN ON THE PLANS. CHECK THAT ALL SLOPES ARE PROPERLY STABILIZED.

7. BE SURE THAT THE TRASH RACKS ARE IN PLACE AND PROPERLY FUNCTIONING. REMOVE SKIMMER AND CLOSE OUTLET VALVE.

8. CONTACT EROSION CONTROL OFFICER FOR APPROVAL.

9. CONTACT A LICENSED SURVEYOR FOR SURVEY OF AS-BUILT CONDITIONS. NOTIFY ENGINEER-OF-RECORD FOR PREPARATION OF AS-BUILT DRAWINGS.

REQUIRED WAKE COUNTY CONSTRUCTION SEQUENCE*

1. SCHEDULE A PRECONSTRUCTION CONFERENCE WITH THE WATERSHED MANGER. OBTAIN A LAND-DISTURBING PERMIT.

2. INSTALL GRAVEL CONSTRUCTION PAD, TEMPORARY DIVERSIONS, SILT FENCE, SEDIMENT BASINS OR OTHER MEASURES AS SHOWN ON THE APPROVED PLAN. CLEAR ONLY AS NECESSARY TO INSTALL THESE DEVICES. SEED TEMPORARY DIVERSIONS, BERMS AND BASINS IMMEDIATELY AFTER CONSTRUCTION.

3. CALL FOR AN ONSITE INSPECTION BY THE WATERSHED MANAGER TO OBTAIN A CERTIFICATE OF COMPLIANCE.

4. BEGIN CLEARING AND GRUBBING. MAINTAIN DEVICES AS NEEDED. ROUGH GRADE SITE.

5. INSTALL STORM SEWER, IF SHOWN, AND PROTECT INLETS WITH BLOCK AND GRAVEL INLET CONTROLS, SEDIMENT TRAPS OR OTHER APPROVED MEASURES AS SHOWN ON THE PLAN. BEGIN CONSTRUCTION, BUILDING, ETC.

6. STABILIZE SITE AS AREAS ARE BROUGHT UP TO FINISH GRADE WITH VEGETATION, PAVING, DITCH LININGS, ETC. SEED AND MULCH DENUDED AREAS PER GROUND STABILIZATION TIME FRAMES.

7. WHEN CONSTRUCTION IS COMPLETE AND ALL AREAS ARE STABILIZED COMPLETELY, CALL FOR AN INSPECTION BY THE WATERSHED MANAGER.

8. IF SITE IS APPROVED, REMOVE TEMPORARY DIVERSIONS, SILT FENCE, SEDIMENT BASINS, ETC., AND SEED OUT OR STABILIZE ANY RESULTING BARE AREAS. ALL REMAINING PERMANENT EROSION CONTROL DEVICES, SUCH AS VELOCITY DISSIPATORS, SHOULD NOW BE INSTALLED.

9. WHEN VEGETATION HAS BECOME ESTABLISHED, CALL FOR A FINAL SITE INSPECTION BY THE WATERSHED MANAGER. OBTAIN A CERTIFICATE OF COMPLETION.

STOCKPILE DESIGN CRITERIA

A. A 25-FOOT TEMPORARY MAINTENANCE AND ACCESS EASEMENT SHALL BE SHOWN AROUND ALL PROPOSED STOCKPILES (EROSION CONTROL MEASURES SURROUNDING THE STOCKPILE SHALL BE SHOWN AT THE OUTER LIMIT OF THIS EASEMENT).
B. STOCKPILE FOOTPRINTS SHALL BE SETBACK A MINIMUM OF 25' FROM ADJACENT PROPERTY LINES.
C. A NOTE SHALL BE PROVIDED ON THE APPROVED PLAN THAT STOCKPILE HEIGHT SHALL NOT EXCEED 35 FEET.
D. STOCKPILE SLOPES SHALL BE 2:1 OR FLATTER.
E. APPROVED BMPS SHALL BE SHOWN ON A PLAN TO CONTROL ANY POTENTIAL SEDIMENT LOSS FROM A STOCKPILE.
F. STOCKPILING MATERIALS ADJACENT TO A DITCH, DRAINAGEWAY, WATERCOURSE, WETLAND, STREAM BUFFER, OR OTHER BODY OF WATER SHALL BE AVOIDED UNLESS AN ALTERNATIVE LOCATION IS DEMONSTRATED TO BE UNAVAILABLE.
G. ANY CONCENTRATED FLOW LIKELY TO AFFECT THE STOCKPILE SHALL BE DIVERTED TO AN APPROVED BMP.
H. OFF-SITE SPOIL OR BORROW AREAS MUST BE IN COMPLIANCE WITH WAKE COUNTY UDO AND STATE REGULATIONS. ALL SPOIL AREAS OVER AN ACRE ARE REQUIRED TO HAVE AN APPROVED SEDIMENT CONTROL PLAN. DEVELOPER/CONTRACTOR SHALL NOTIFY WAKE COUNTY OF ANY OFFSITE DISPOSAL OF SOIL, PRIOR TO DISPOSAL. FILL OF FEMA FLOODWAYS AND NON-ENCROACHMENT AREAS ARE PROHIBITED EXCEPT AS OTHERWISE PROVIDED BY SUBSECTION 14-19-2 OF THE WAKE COUNTY UNIFIED DEVELOPMENT ORDINANCE (CERTIFICATIONS AND PERMITS REQUIRED).

MAINTENANCE REQUIREMENTS TO BE NOTED ON THE PLAN

I. SEEDING OR COVERING STOCKPILES WITH TARPS OR MULCH IS REQUIRED AND WILL REDUCE EROSION PROBLEMS. TARPS SHOULD BE KEYED IN AT THE TOP OF THE SLOPE TO KEEP WATER FROM RUNNING UNDERNEATH THE PLASTIC.
J. IF A STOCKPILE IS TO REMAIN FOR FUTURE USE AFTER THE PROJECT IS COMPLETE (BUILDERS, ETC.), THE FINANCIAL RESPONSIBLE PARTY MUST NOTIFY WAKE COUNTY OF A NEW RESPONSIBLE PARTY FOR THAT STOCKPILE.
K. THE APPROVED PLAN SHALL PROVIDE FOR THE USE OF STAGED SEEDING AND MULCHING ON A CONTINUAL BASIS WHILE THE STOCKPILE IS IN USE.
L. ESTABLISH AND MAINTAIN A VEGETATIVE BUFFER AT THE TOE OF THE SLOPE (WHERE PRACTICAL).

CITY OF RALEIGH - PLANS AUTHORIZED FOR CONSTRUCTION

Electronic Approval: This approval is being issued electronically. This approval is valid only upon the signature of a City of Raleigh Review Officer below. The City will retain a copy of the approved plans. Any work authorized by this approval must proceed in accordance with the plans kept on file with the City. This electronic approval may not be edited once issued. Any modification to this approval once issued will invalidate this approval.

City of Raleigh Development Approval ______________________

Raleigh Water Review Officer

North Carolina 811 www.nc811.org
*** 3 Days Before Digging ***
North Carolina 811
811 or 1-800-632-4949
Remote Ticket Entry
http://nc811.org/remoteticketentry.htm

AMERICAN Engineering
American Engineering Associates - Southeast, P.A.
4020 Westchase Boulevard, Suite 450
Raleigh, NC 27607
919-469-1101

NORTH CAROLINA AMERICAN ENGINEERING ASSOCIATES SOUTHEAST C-3881 CERTIFICATE OF AUTHORIZATION

PRELIMINARY - DO NOT USE FOR CONSTRUCTION
NORTH CAROLINA PROFESSIONAL ENGINEER 56520 JAKOB P. KLEIN
Digitally signed by Jakob Klein Date: 2024.12.02

NO.	DATE	REVISION:

STIPULATION FOR REUSE
THIS DRAWING WAS PREPARED FOR USE ON THE SPECIFIC SITE, NAMED HEREON, CONTEMPORANEOUSLY WITH ITS ISSUE DATE AS LISTED, HEREON. AND IT IS NOT SUITABLE FOR USE ON A DIFFERENT PROJECT SITE OR AT A LATER TIME. USE OF THIS DRAWING FOR REFERENCE OR EXAMPLE ON ANOTHER PROJECT REQUIRES THE SERVICES OF PROPERLY LICENSED ARCHITECTS AND ENGINEERS. REPRODUCTION OF THIS DRAWING FOR REUSE ON ANOTHER PROJECT IS NOT AUTHORIZED AND MAY BE CONTRARY TO THE LAW.

THE PRESERVE
AT
MOODY FARM

ROLESVILLE ROAD
WAKE COUNTY, NC

JOB NUMBER: 21-002
CHECKED BY: JK
DRAWN BY: RC & SM
DATE: 12/02/2024

SHEET TITLE:
GENERAL NOTES

SHEET NO.:
C2.0

MAINTENANCE OF EROSION CONTROL MEASURES

SILT FENCE MAINTENANCE - INSPECT SEDIMENT FENCES AT LEAST ONCE A WEEK AND AFGER EACH RAINFALL. MAKE ANY REQUIRED REPAIRS IMMEDIATELY. SHOULD THE FABRIC OF A SEDIMENT FENCE COLLAPSE, TEAR, DECOMPOSE OR BECOME INEFFECTIVE, REPLACE IT PROMPTLY. REMOVE SEDIMENT DEPOSITS AS NECESSARY TO PROVIDE ADEQUATE STORAGE VOLUME FOR THE NEXT RAIN AND TO REDUCE PRESSURE ON THE FENCE. TAKE CARE TO AVOID UNDERMINING THE FENCE DURING CLEANOUT. REMOVE ALL FENCING MATERIALS AND UNSTABLE SEDIMENT DEPOSITS AND BRING THE AREA TO GRADE AND STABILIZE IT AFTER THE CONTRIBUTING DRAINAGE AREA HAS BEEN PROPERLY STABILIZED.

SILT FENCE OUTLETS - SHALL BE INSPECTED AT LEAST WEEKLY AND AFTER EVERY SIGNIFICANT RAINFALL. IF DAMAGED, THEY SHALL HAVE FABRIC, POSTS OR WIRE BACKING REPLACED TO RESTORE TO ORIGINAL CONDITION.

TREE PROTECTION FENCE MAINTENANCE - CONTINUE TO CARE FOR THE SITE UNTIL THE NEW OWNER TAKES POSSESSION. TAKE THESE STEPS AFTER ALL MATERIALS AND EQUIPMENT HAVE BEEN REMOVED FROM THE SITE:

- REMOVE TREE PROTECTION ZONE FENCES.
- PRUNE ANY DAMAGED TREES. IN SPITE OF PRECAUTIONS, SOME DAMAGE TO PROTECTED TREES MAY OCCUR. IN SUCH CASES, REPAIR ANY DAMAGE TO THE CROWN, TRUNK, OR ROOT SYSTEM IMMEDIATELY.
- REPAIR ROOTS BY CUTTING OFF THE DAMAGED AREAS AND PAINTING THEM WITH TREE PAINT SPREAD PEAT MOSS OR MOIST TOPSOIL OVER EXPOSED ROOTS.
- REPAIR DAMAGE TO BARK BY TRIMMING AROUND THE DAMAGED AREA AS SHOWN IN FIGURE 6.05D, TAPER THE CUT TO PROVIDE DRAINAGE, AND PAINT WITH TREE PAINT.
- CUT OFF ALL DAMAGED TREE LIMBS ABOVE THE TREE COLLAR AT THE TRUNK OR MAIN BRANCH. USE THREE SEPARATE CUTS AS SHOWN IN FIGURE 6.05D TO AVOID PEELING BARK FROM HEALTHY AREAS OF THE TREE.
- CONTINUE MAINTENANCE CARE. PAY SPECIAL ATTENTION TO ANY STRESSED, DISEASED, OR INSECT-INFESTED TREES. REDUCE TREE STRESS CAUSED BY UNINTENDED CONSTRUCTION DAMAGE BY OPTIMIZING PLANT CARE WITH WATER, MULCH, AND FERTILIZER WHERE APPROPRIATE. CONSULT YOUR TREE EXPERT IF NEEDED.
- INFORM THE PROPERTY OWNER ABOUT THE MEASURES EMPLOYED DURING CONSTRUCTION, WHY THOSE MEASURES WERE TAKEN, AND HOW THE EFFORT CAN BE CONTINUED.

CONSTRUCTION ENTRANCE - MAINTAIN THE GRAVEL PAD IN A CONDITION TO PREVENT MUD OR SEDIMENT FROM LEAVING THE CONSTRUCTION SITE. THIS MAY REQUIRE PERIODIC TOPDRESSING WITH 2-INCH STONE. AFTER EACH RAINFALL, INSPECT ANY STRUCTURE USED TO TRAP SEDIMENT AND CLEAN IT OUT AS NECESSARY. IMMEDIATELY REMOVE ALL OBJECTIONABLE MATERIALS SPILLED, WASHED, OR TRACKED ONTO PUBLIC ROADWAYS.

SOIL STOCKPILE AREAS/OTHER GRASSED AREAS MAINTENANCE - GRASS AREAS SHALL BE RESEEDED AS NECESSARY. SOIL STOCKPILE AREAS SHALL BE SEEDED WHEN THEIR USE IS COMPLETE.

TEMPORARY SEDIMENT TRAP - INSPECT TEMPORARY SEDIMENT TRAPS AT LEAST WEEKLY AND AFTER EACH SIGNIFICANT (½ INCH OR GREATER) RAINFALL EVENT AND REPAIR IMMEDIATELY. REMOVE SEDIMENT, AND RESTORE THE TRAP TO ITS ORIGINAL DIMENSIONS WHEN THE SEDIMENT HAS ACCUMULATED TO ONE-HALF THE DESIGN DEPTH OF THE TRAP. PLACE THE SEDIMENT THAT IS REMOVED IN THE DESIGNATED DISPOSAL AREA AND REPLACE THE PART OF THE GRAVEL FACING THAT IS IMPAIRED BY SEDIMENT.

CHECK THE STRUCTURE FOR DAMAGE FROM EROSION OR PIPING. PERIODICALLY CHECK THE DEPTH OF THE SPILLWAY TO ENSURE IT IS A MINIMUM OF 1.5 FEET BELOW THE LOW POINT OF THE EMBANKMENT. IMMEDIATELY FILL ANY SETTLEMENT OF THE EMBANKMENT TO SLIGHTLY ABOVE DESIGN GRADE. ANY RIPRAP DISPLACED FROM THE SPILLWAY MUST BE REPLACED IMMEDIATELY.

AFTER ALL SEDIMENT-PRODUCING AREAS HAVE BEEN PERMANENTLY STABILIZED, REMOVE THE STRUCTURE AND ALL UNSTABLE SEDIMENT. SMOOTH THE AREA TO BLEND WITH THE ADJOINING AREAS AND STABILIZE PROPERLY (REFERENCES: SURFACE STABILIZATION).

SEDIMENT BASINS - INSPECT TEMPORARY SEDIMENT BASINS AT LEAST WEEKLY AND AFTER EACH SIGNIFICANT (1/2 INCH OR GREATER) RAINFALL EVENT AND REPAIR IMMEDIATELY. REMOVE SEDIMENT AND RESTORE THE BASIN TO ITS ORIGINAL DIMENSIONS WHEN IT ACCUMULATES TO ONE-HALF THE DESIGN DEPTH. PLACE REMOVED SEDIMENT IN AN AREA WITH SEDIMENT CONTROLS.

CHECK THE EMBANKMENT, SPILLWAYS, AND OUTLET FOR EROSION DAMAGE, AND INSPECT THE EMBANKMENT FOR PIPING AND SETTLEMENT. MAKE ALL NECESSARY REPAIRS IMMEDIATELY. REMOVE ALL TRASH AND OTHER DEBRIS FROM THE RISER AND POOL AREA.

CONCRETE WASHOUT - IT SHALL BE CLEANED PERIODICALLY AS NEEDED. IF THE PLASTIC LINER IS DAMAGED, IT SHALL BE REPLACED.

BAFFLES - INSPECT BAFFLES AT LEAST ONCE A WEEK AND AFTER EACH RAINFALL. MAKE ANY REQUIRED REPAIRS IMMEDIATELY.

BE SURE TO MAINTAIN ACCESS TO THE BAFFLES. SHOULD THE FABRIC OF A BAFFLE COLLAPSE, TEAR, DECOMPOSE, OR BECOME INEFFECTIVE, REPLACE IT PROMPTLY.

REMOVE SEDIMENT DEPOSITS WHEN IT REACHES HALF FULL, TO PROVIDE ADEQUATE STORAGE VOLUME FOR THE NEXT RAIN AND TO REDUCE PRESSURE ON THE BAFFLES.TAKE CARE TO AVOID DAMAGING THE BAFFLES DURING CLEANOUT AND REPLACE IF DAMAGED DURING CLEANOUT OPERATIONS. SEDIMENT DEPTH SHOULD NEVER EXCEED HALF THE DESIGNED STORAGE DEPTH.

AFTER THE CONTRIBUTING DRAINAGE AREA HAS BEEN PROPERLY STABILIZED, REMOVE ALL BAFFLE MATERIALS AND UNSTABLE SEDIMENT DEPOSITS, BRING THE AREA TO GRADE, AND STABILIZE IT.

ROLLED EROSION CONTROL PRODUCTS -

1. INSPECT ROLLED EROSION CONTROL PRODUCTS AT LEAST WEEKLY AND AFTER EACH SIGNIFICANT (1/2 INCH OR GREATER) RAIN FALL EVENT REPAIR IMMEDIATELY.
2. GOOD CONTACT WITH THE GROUND MUST BE MAINTAINED, AND EROSION MUST NOT OCCUR BENEATH THE RECP.
3. ANY AREAS OF THE RECP THAT ARE DAMAGED OR NOT IN CLOSE CONTACT WITH THE GROUND SHALL BE REPAIRED AND STAPLED.
4. IF EROSION OCCURS DUE TO POORLY CONTROLLED DRAINAGE, THE PROBLEM SHALL BE FIXED AND THE ERODED AREA PROTECTED.
5. MONITOR AND REPAIR THE RECP AS NECESSARY UNTIL GROUND COVER IS ESTABLISHED.

SKIMMERS - INSPECT SKIMMER SEDIMENT BASINS AT LEAST WEEKLY AND AFTER EACH SIGNIFICANT (ONE-HALF INCH OR GREATER) RAINFALL EVENT AND REPAIR IMMEDIATELY. REMOVE SEDIMENT AND RESTORE THE BASIN TO ITS ORIGINAL DIMENSIONS WHEN SEDIMENT ACCUMULATES TO ONE-HALF THE HEIGHT OF THE FIRST BAFFLE. PULL THE SKIMMER TO ONE SIDE SO THAT THE SEDIMENT UNDERNEATH IT CAN BE EXCAVATED. EXCAVATE THE SEDIMENT FROM THE ENTIRE BASIN, NOT J UST AROUND THE SKIMMER OR THE FIRST CELL. MAKE SURE VEGETATION GROWING IN THE BOTTOM OF THE BASIN DOES NOT HOLD DOWN THE SKIMMER.

REPAIR THE BAFFLES IF THEY ARE DAMAGED. RE-ANCHOR THE BAFFLES IF WATER IS FLOWING UNDERNEATH OR AROUND THEM.

IF THE SKIMMER IS CLOGGED WITH TRASH AND THERE IS WATER IN THE BASIN, USUALLY JERKING ON THE ROPE WILL MAKE THE SKIMMER BOB UP AND DOWN AND DISLODGE THE DEBRIS AND RESTORE FLOW. IF THIS DOES NOT WORK, PULL THE SKIMMER OVER TO THE SIDE OF THE BASIN AND REMOVE THE DEBRIS.ALSO CHECK THE ORIFICE INSIDE THE SKIMMER TO SEE IF IT IS CLOGGED; IF SO, REMOVE THE DEBRIS.

IF THE SKIMMER AND/ OR BARREL PIPE IS CLOGGED, THE ORIFICE CAN BE REMOVED AND THE OBSTRUCTION CLEARED WITH A PLUMBER'S SNAKE OR BY FLUSHING WITH WATER. BE SURE AND REPLACE THE ORIFICE BEFORE REPOSITIONING THE SKIMMER.

CHECK THE FABRIC LINED SPILLWAY FOR DAMAGE AND MAKE ANY REQUIRED REPAIRS WITH FABRIC THAT SPANS THE FULL WIDTH OF THE SPILLWAY. CHECK THE EMBANKMENT, SPILLWAYS, AND OUTLET FOR EROSION DAMAGE, AND INSPECT THE EMBANKMENT FOR PIPING AND SETTLEMENT. MAKE ALL NECESSARY REPAIRS IMMEDIATELY. REMOVE ALL TRASH AND OTHER DEBRIS FROM THE SKIMMER AND POOL AREAS.

FREEZING WEATHER CAN RESULT IN ICE FORMING IN THE BASIN. SOME SPECIAL PRECAUTIONS SHOULD BE TAKEN IN THE WINTER TO PREVENT THE SKIMMER FROM PLUGGING WITH ICE.

GRASSED LINED CHANNEL- DURING THE ESTABLISHMENT PERIOD, CHECK GRASS-LINED CHANNELS AFTER EVERY RAINFALL.AFTER GRASS IS ESTABLISHED, PERIODICALLY CHECK THE CHANNEL; CHECK IT AFTER EVERY HEAVY RAINFALL EVENT. IMMEDIATELY MAKE REPAIRS. IT IS PARTICULARLY IMPORTANT TO CHECK THE CHANNEL OUTLET AND ALL ROAD CROSSINGS FOR BANK STABILITY AND EVIDENCE OF PIPING OR SCOUR HOLES. REMOVE ALL SIGNIFICANT SEDIMENT ACCUMULATIONS TO MAINTAIN THE DESIGNED CARRYING CAPACITY. KEEP THE GRASS IN A HEALTHY, VIGOROUS CONDITION AT ALL TIMES, SINCE IT IS THE PRIMARY EROSION PROTECTION FOR THE CHANNEL (PRACTICE 6.11, PERMANENT SEEDING).

RIP-RAP CHANNEL - INSPECT CHANNELS AT REGULAR INTERVALS AS WELL AS AFTER MAJOR RAINS, AND MAKE REPAIRS PROMPTLY. GIVE SPECIAL ATTENTION TO THE OUTLET AND INLET SECTIONS AND OTHER POINTS WHERE CONCENTRATED FLOW ENTERS. CAREFULLY CHECK STABILITY AT ROAD CROSSINGS, AND LOOK FOR INDICATIONS OF PIPING, SCOUR HOLES, OR BANK FAILURES. MAKE REPAIRS IMMEDIATELY. MAINTAIN ALL VEGETATION ADJACENT TO THE CHANNEL IN A HEALTHY, VIGOROUS CONDITION TO PROTECT THE AREA FROM EROSION AND SCOUR DURING OUT-OF-BANK FLOW.

OUTLET STABILIZATION STRUCTURE - INSPECT RIPRAP OUTLET STRUCTURES WEEKLY AND AFTER SIGNIFICANT (1/2 INCH OR GREATER) RAINFALL EVENTS TO SEE IF ANY EROSION AROUND OR BELOW THE RIPRAP HAS TAKEN PLACE, OR IF STONES HAVE BEEN DISLODGED. IMMEDIATELY MAKE ALL NEEDED REPAIRS TO PREVENT FURTHER DAMAGE

TEMPORARY SILT DITCH - SHALL BE INSPECTED AT LEAST WEEKLY AND AFTER EVERY SIGNIFICANT RAINFALL. IF SIGNIFICANT EROSION OF THE DITCH IS HAPPENING IT SHALL BE RE-GRADED. ANY BREACH OF THE DOWNHILL SIDE BERM SHALL BE FIXED IMMEDIATELY.

WATTLES/COMPOST SOCK - INSPECT COMPOST SOCKS WEEKLY AND AFTER EACH SIGNIFICANT RAINFALL EVENT (1/2 INCH OR GREATER). REMOVE ACCUMULATED SEDIMENT AND ANY DEBRIS. THE COMPOST SOCK MUST BE REPLACED IF CLOGGED OR TORN. IF PONDING BECOMES EXCESSIVE, THE SOCK MAY NEED TO BE REPLACED WITH A LARGER DIAMETER OR A DIFFERENT MEASURE. THE SOCK NEEDS TO BE REINSTALLED IF UNDERMINED OR DISLODGED. THE COMPOST SOCK SHALL BE INSPECTED UNTIL LAND DISTURBANCE IS COMPLETE AND THE AREA ABOVE THE MEASURE HAS BEEN PERMANENTLY STABILIZED

ROCK PIPE INLET PROTECTION - INSPECT ROCK PIPE INLET PROTECTION AT LEAST WEEKLY AND AFTER EACH SIGNIFICANT (½ INCH OR GREATER) RAINFALL EVENT AND REPAIR IMMEDIATELY. REMOVE SEDIMENT AND RESTORE THE SEDIMENT STORAGE AREA TO ITS ORIGINAL DIMENSIONS WHEN THE SEDIMENT HAS ACCUMULATED TO ONE-HALF THE DESIGN DEPTH OF THE TRAP. PLACE THE SEDIMENT THAT IS REMOVED IN THE DESIGNATED DISPOSAL AREA AND REPLACE THE CONTAMINATED PART OF THE GRAVEL FACING.

CHECK THE STRUCTURE FOR DAMAGE. ANY RIPRAP DISPLACED FROM THE STONE HORSESHOE MUST BE REPLACED IMMEDIATELY.

AFTER ALL THE SEDIMENT-PRODUCING AREAS HAVE BEEN PERMANENTLY STABILIZED, REMOVE THE STRUCTURE AND ALL THE UNSTABLE SEDIMENT. SMOOTH THE AREA TO BLEND WITH THE ADJOINING AREAS AND PROVIDE PERMANENT GROUND COVER (SURFACE STABILIZATION).

CITY OF RALEIGH - PLANS AUTHORIZED FOR CONSTRUCTION

Electronic Approval: This approval is being issued electronically. This approval is valid only upon the signature of a City of Raleigh Review Officer below. The City will retain a copy of the approved plans. Any work authorized by this approval must proceed in accordance with the plans kept on file with the City. This electronic approval may not be edited once issued. Any modification to this approval once issued will invalidate this approval.

City of Raleigh Development Approval ________________________

Raleigh Water Review Officer

North Carolina 811
www.nc811.org
*** 3 Days Before Digging ***
North Carolina 811
811 or 1-800-632-4949
Remote Ticket Entry
http://nc811.org/remoteticketentry.htm

AMERICAN Engineering
American Engineering Associates - Southeast, P.A.
4020 Westchase Boulevard, Suite 450
Raleigh, NC 27607
919-469-1101

NORTH CAROLINA AMERICAN ENGINEERING ASSOCIATES SOUTHEAST C-3881 CERTIFICATE OF AUTHORIZATION

PRELIMINARY - DO NOT USE FOR CONSTRUCTION
NORTH CAROLINA PROFESSIONAL ENGINEER 56508 JAKOB P. KLEIN
Digitally signed by Jakob Klein
Date: 2024.12.02

NO.	DATE	REVISION:

STIPULATION FOR REUSE

THIS DRAWING WAS PREPARED FOR USE ON THE SPECIFIC SITE, NAMED HEREON, CONTEMPORANEOUSLY WITH ITS ISSUE DATE AS LISTED, HEREON. AND IT IS NOT SUITABLE FOR USE ON A DIFFERENT PROJECT SITE OR AT A LATER TIME. USE OF THIS DRAWING FOR REFERENCE OR EXAMPLE ON ANOTHER PROJECT REQUIRES THE SERVICES OF PROPERLY LICENSED ARCHITECTS AND ENGINEERS. REPRODUCTION OF THIS DRAWING FOR REUSE ON ANOTHER PROJECT IS NOT AUTHORIZED AND MAY BE CONTRARY TO THE LAW.

THE PRESERVE
AT
MOODY FARM

ROLESVILLE ROAD
WAKE COUNTY, NC

JOB NUMBER: 21-002
CHECKED BY: JK
DRAWN BY: RC & SM
DATE: 12/02/2024

SHEET TITLE:

GENERAL NOTES

SHEET NO.: **C2.1**

December 2, 2024

Z:\Jobs\21-002 Moody Development Tract (R210002)\dwg_Working Dwgs\Construction Set\2.0 Notes.dwg

#8- Ensure erosion control follows NCDEQ design criteria. There are several areas where the silt fence appears to be handling a decent amount of area without any other erosion control measures. Table 6.62a in NCDEQ's NC Erosion and Sediment Control Planning and Design Manual specifies the maximum areas silt fence can be designed for without adding additional measures. Consider adding additional diversion ditches routed towards the proposed sediment basins.

GRAPHIC SCALE

100 0 50 100 200 400

(IN FEET)
1 inch =100

EROSION CONTROL LEGEND	
	EXISTING TOPOGRAPHY
	EXISTING BOUNDARY
	EXISTING WETLANDS AREA
	EXISTING 50' NEUSE RIPERIAN BUFFER
	EXISTING BUFFER ZONES
	PROPOSED LOT LINE
	PROPOSED EASEMENT
	PROPOSED 25 x 50 GRAVEL CONSTRUCTION ENTRANCE
	PROPOSED RIP RAP
	BASIN WEIR
	PROPOSED SEDIMENT BASIN
	PROPOSED INLET PROTECTION
	PROPOSED PIPE INLET PROTECTION
	PROPOSED CHECK DAM
	PROPOSED SF OUTLET
	GREENWAY TRAIL HATCH
	PROPOSED BASIN MAINTENANCE PAD
	PROPOSED WATTLE
SF	PROPOSED SILT FENCE
TF	PROPOSED TREE PROTECTION FENCE/ LIMITS OF DISTURBANCE
	DIVERSION DITCH DRAINAGE AREA
>>	PROPOSED DIVERSION DITCH
	PROPOSED JUNCTION BOX
	PROPOSED CATCH BASIN
	PROPOSED YARD INLET
	PROPOSED DROP INLET
	PROPOSED STORM WATER

CITY OF RALEIGH - PLANS AUTHORIZED FOR CONSTRUCTION

Electronic Approval: This approval is being issued electronically. This approval is valid only upon the signature of a City of Raleigh Review Officer below. The City will retain a copy of the approved plans. Any work authorized by this approval must proceed in accordance with the plans kept on file with the City. This electronic approval may not be edited once issued. Any modification to this approval once issued will invalidate this approval.

City of Raleigh Development Approval _____

Raleigh Water Review Officer

North Carolina 811

*** 3 Days Before Digging ***
North Carolina 811
811 or 1-800-632-4949
Remote Ticket Entry
http://nc811.org/remoteticketentry.htm

AMERICAN Engineering
American Engineering Associates - Southeast, P.A.
4020 Westgate Boulevard, Suite 403-B
Raleigh, NC 27607
919-469-1101

NORTH CAROLINA CERTIFICATE OF AUTHORIZATION
AMERICAN ENGINEERING ASSOCIATES SOUTHEAST
C-3881

PRELIMINARY
NOT FOR CONSTRUCTION

REVISION:

NO.	DATE	REVISION

STIPULATION FOR REUSE

THIS DRAWING WAS PREPARED FOR USE ON THE SPECIFIC SITE, NAMED HEREON, CONTEMPORANEOUSLY WITH ITS ISSUE DATE AS LISTED, HEREON. AND IT IS NOT SUITABLE FOR USE ON A DIFFERENT PROJECT SITE OR AT A LATER TIME. USE OF THIS DRAWING FOR REFERENCE OR EXAMPLE ON ANOTHER PROJECT REQUIRES THE SERVICES OF PROPERLY LICENSED ARCHITECTS AND ENGINEERS. REPRODUCTION OF THIS DRAWING FOR REUSE ON ANOTHER PROJECT IS NOT AUTHORIZED AND MAY BE CONTRARY TO THE LAW.

THE PRESERVE AT MOODY FARM
ROLESVILLE ROAD
WAKE COUNTY, NC

JOB NUMBER: 21-002
CHECKED BY: JK
DRAWN BY: RC & SM
DATE: 12/02/2024

SHEET TITLE:
OVERALL EC STAGE 1

SHEET NO.:
C3.0

Z:\Jobs\21-002 Moody Development Trust (B210002)\Shared_Working Dwgs\Construction Set\13-3.4 Erosion Control.dwg December 2, 2024

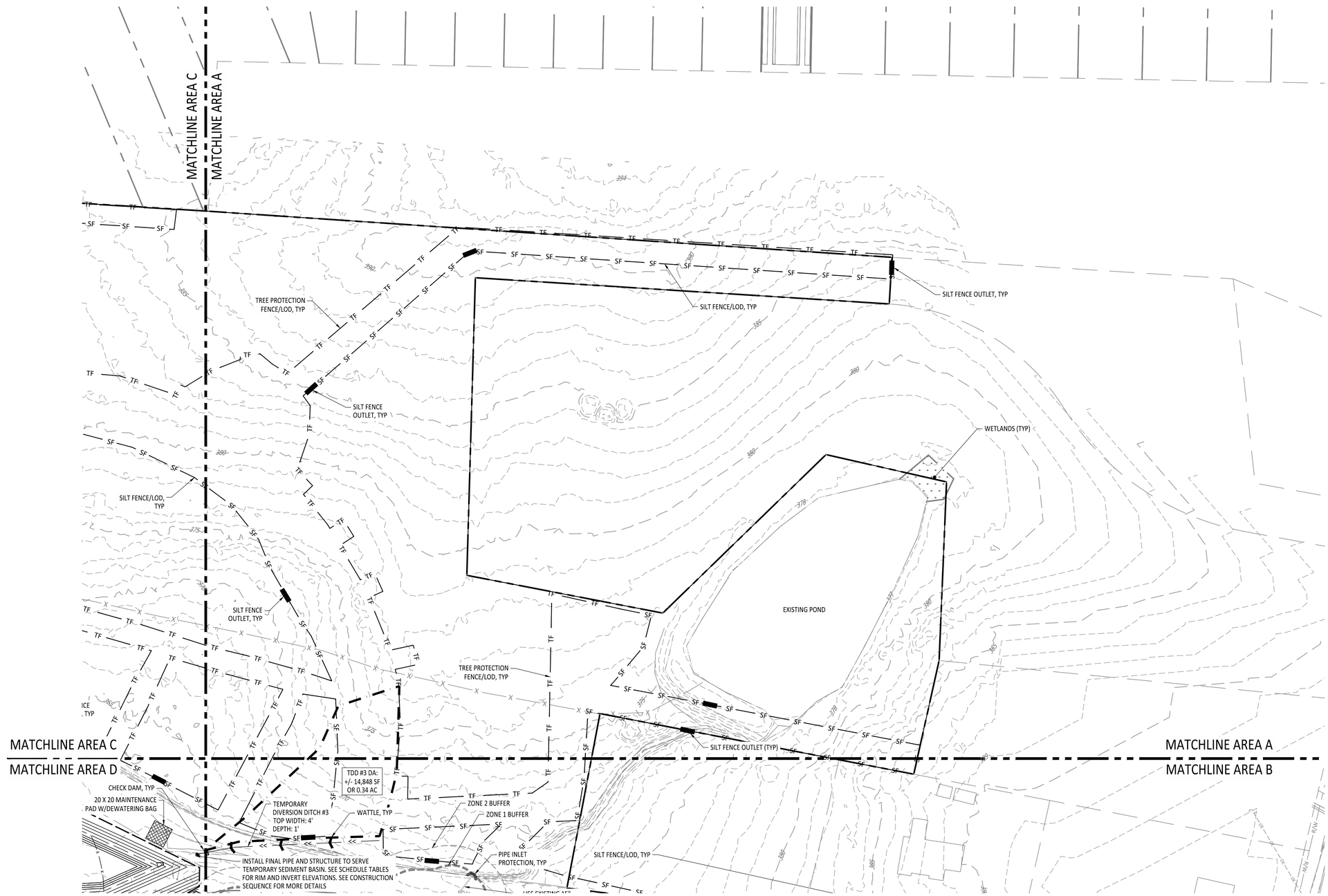

GENERAL NOTES:

1. SEE SHEET C7.0 FOR TEMPORARY DIVERSION DITCH SCHEDULE.

GRAPHIC SCALE

50 0 25 50 100 200

(IN FEET)
1 inch = 50

CITY OF RALEIGH - PLANS AUTHORIZED FOR CONSTRUCTION

Electronic Approval: This approval is being issued electronically. This approval is valid only upon the signature of a City of Raleigh Review Officer below. The City will retain a copy of the approved plans. Any work authorized by this approval must proceed in accordance with the plans kept on file with the City. This electronic approval may not be edited once issued. Any modification to this approval once issued will invalidate this approval.

City of Raleigh Development Approval _____

Raleigh Water Review Officer

North Carolina 811

*** 3 Days Before Digging ***
North Carolina 811
811 or 1-800-632-4949
Remote Ticket Entry
http://nc811.org/remoteticketentry.htm

AMERICAN Engineering
American Engineering Associates - Southeast, P.A.
4020 Westchase Boulevard, Suite 450
Raleigh, NC 27607
919-469-1101

NORTH CAROLINA AMERICAN ENGINEERING ASSOCIATES SOUTHEAST C-3881 CERTIFICATE OF AUTHORIZATION

PRELIMINARY

PRELIMINARY
DO NOT USE FOR CONSTRUCTION

NORTH CAROLINA PROFESSIONAL ENGINEER SEAL 045202 JACOB P. KLEIN

Digitally signed by Jacob Klein
DN: cn=Jacob Klein, o=American Engineering Associates Southeast, ou=Engineering, email=jklein@aeasoutheast.com, c=US
Date: 2025.02.24 15:09:42

FOR INFORMATION, ONLY

NO.	DATE	REVISION:

STIPULATION FOR REUSE

THIS DRAWING WAS PREPARED FOR USE ON THE SPECIFIC SITE, NAMED HEREON, CONTEMPORANEOUSLY WITH ITS ISSUE DATE AS LISTED, HEREON, AND IT IS NOT SUITABLE FOR USE ON A DIFFERENT PROJECT SITE OR AT A LATER TIME. USE OF THIS DRAWING FOR REFERENCE OR EXAMPLE ON ANOTHER PROJECT REQUIRES THE SERVICES OF PROPERLY LICENSED ARCHITECTS AND ENGINEERS. REPRODUCTION OF THIS DRAWING FOR REUSE ON ANOTHER PROJECT IS NOT AUTHORIZED AND MAY BE CONTRARY TO THE LAW.

THE PRESERVE AT MOODY FARM

ROLESVILLE ROAD
WAKE COUNTY, NC

JOB NUMBER: 21-002
CHECKED BY: JK
DRAWN BY: RC & SM
DATE: 12/02/2024

SHEET TITLE:

EC STAGE 1 - AREA A

SHEET NO.:

C3.1

Z:\Jobs\21-002 Moody Development Tract [8210003\Dwg_Working Dwgs\Construction\5413-3-1-Erosion Control.dwg

December 2, 2024

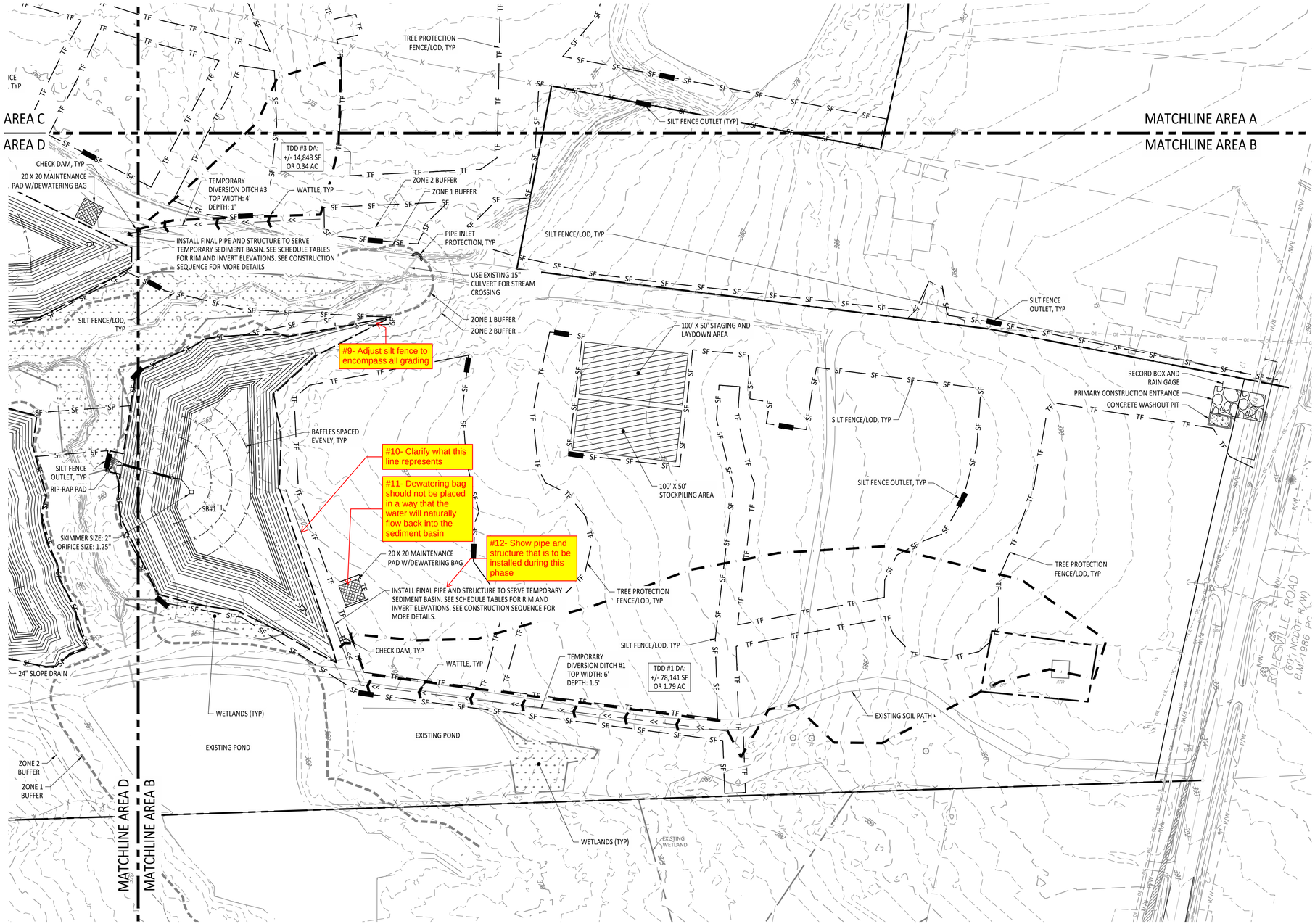

#13- Clarify how access to existing houses will be maintained throughout construction. If the existing dirt drive is to be maintained, it should be shown on plans.

GENERAL NOTES:

1. SEE SHEET C7.0 FOR TEMPORARY DIVERSION DITCH SCHEDULE.

GRAPHIC SCALE

50 0 25 50 100 200

(IN FEET)
1 inch = 50

CITY OF RALEIGH - PLANS AUTHORIZED FOR CONSTRUCTION

Electronic Approval: This approval is being issued electronically. This approval is valid only upon the signature of a City of Raleigh Review Officer below. The City will retain a copy of the approved plans. Any work authorized by this approval must proceed in accordance with the plans kept on file with the City. This electronic approval may not be edited once issued. Any modification to this approval once issued will invalidate this approval.

City of Raleigh Development Approval _____

Raleigh Water Review Officer

North Carolina 811

*** 3 Days Before Digging ***
North Carolina 811
811 or 1-800-632-4949
Remote Ticket Entry
http://nc811.org/remoteticketentry.htm

AMERICAN Engineering
American Engineering Associates - Southeast, P.A.
4020 Westchase Boulevard, Suite 450
Raleigh, NC 27607
919-469-1101

NORTH CAROLINA AMERICAN ENGINEERING ASSOCIATES SOUTHEAST C-3881 CERTIFICATE OF AUTHORIZATION

PRELIMINARY

PRELIMINARY
DO NOT USE FOR CONSTRUCTION

NORTH CAROLINA PROFESSIONAL ENGINEER SEAL 045261 JACOB P. KLEIN
Digitally signed by Jacob Klein
DN: cn=Jacob Klein, o=AMERICAN ENGINEERING ASSOCIATES SOUTHEAST, ou=Engineering, email=jklein@aeassociates.com, c=US
2025.03.27 12:12:52 -04'00'

FOR INFORMATION, ONLY

NO.	DATE	REVISION:

STIPULATION FOR REUSE

THIS DRAWING WAS PREPARED FOR USE ON THE SPECIFIC SITE, NAMED HEREON, CONTEMPORANEOUSLY WITH ITS ISSUE DATE AS LISTED, HEREON, AND IT IS NOT SUITABLE FOR USE ON A DIFFERENT PROJECT SITE OR AT A LATER TIME. USE OF THIS DRAWING FOR REFERENCE OR EXAMPLE ON ANOTHER PROJECT REQUIRES THE SERVICES OF PROPERLY LICENSED ARCHITECTS AND ENGINEERS. REPRODUCTION OF THIS DRAWING FOR REUSE ON ANOTHER PROJECT IS NOT AUTHORIZED AND MAY BE CONTRARY TO THE LAW.

THE PRESERVE AT MOODY FARM

ROLESVILLE ROAD
WAKE COUNTY, NC

JOB NUMBER: 21-002
CHECKED BY: JK
DRAWN BY: RC & SM
DATE: 12/02/2024

SHEET TITLE:

EC STAGE 1 - AREA B

SHEET NO.:

C3.2

Z:\Jobs\21-002 Moody Development Trust [8210002]\Awg_Working Dwgs\Construction\5455\3-3-4 Erosion Control.dwg December 2, 2024

GENERAL NOTES:

1. SEE SHEET C7.0 FOR TEMPORARY DIVERSION DITCH SCHEDULE.

GRAPHIC SCALE

50 0 25 50 100 200

(IN FEET)
1 inch = 50

CITY OF RALEIGH - PLANS AUTHORIZED FOR CONSTRUCTION

Electronic Approval: This approval is being issued electronically. This approval is valid only upon the signature of a City of Raleigh Review Officer below. The City will retain a copy of the approved plans. Any work authorized by this approval must proceed in accordance with the plans kept on file with the City. This electronic approval may not be edited once issued. Any modification to this approval once issued will invalidate this approval.

City of Raleigh Development Approval _____

Raleigh Water Review Officer

North Carolina 811

*** 3 Days Before Digging ***
North Carolina 811
811 or 1-800-632-4949
Remote Ticket Entry
http://nc811.org/remoteticketentry.htm

AMERICAN Engineering
American Engineering Associates - Southeast, P.A.
4020 Westchase Boulevard, Suite 450
Raleigh, NC 27607
919-469-1101

NORTH CAROLINA AMERICAN ENGINEERING ASSOCIATES SOUTHEAST C-3881 CERTIFICATE OF AUTHORIZATION

PRELIMINARY

PRELIMINARY
DO NOT USE FOR CONSTRUCTION

NORTH CAROLINA PROFESSIONAL ENGINEER SEAL 045324 JACOB P. KLEIN
Digitally signed by Jacob Klein
2025.01.02 14:24:32 -05'00'

FOR INFORMATION ONLY

NO.	DATE	REVISION:

STIPULATION FOR REUSE

THIS DRAWING WAS PREPARED FOR USE ON THE SPECIFIC SITE, NAMED HEREON, CONTEMPORANEOUSLY WITH ITS ISSUE DATE AS LISTED, HEREON, AND IT IS NOT SUITABLE FOR USE ON A DIFFERENT PROJECT SITE OR AT A LATER TIME. USE OF THIS DRAWING FOR REFERENCE OR EXAMPLE ON ANOTHER PROJECT REQUIRES THE SERVICES OF PROPERLY LICENSED ARCHITECTS AND ENGINEERS. REPRODUCTION OF THIS DRAWING FOR REUSE ON ANOTHER PROJECT IS NOT AUTHORIZED AND MAY BE CONTRARY TO THE LAW.

THE PRESERVE AT MOODY FARM

ROLESVILLE ROAD
WAKE COUNTY, NC

JOB NUMBER: 21-002
CHECKED BY: JK
DRAWN BY: RC & SM
DATE: 12/02/2024

SHEET TITLE:

EC STAGE 1 - AREA C

SHEET NO.:

C3.3

Z:\Jobs\21-002 Moody Development Tract (R21000070)\dwg_Working Dwgs\Construction Set\13-0-3-4 Erosion Control.dwg December 2, 2024

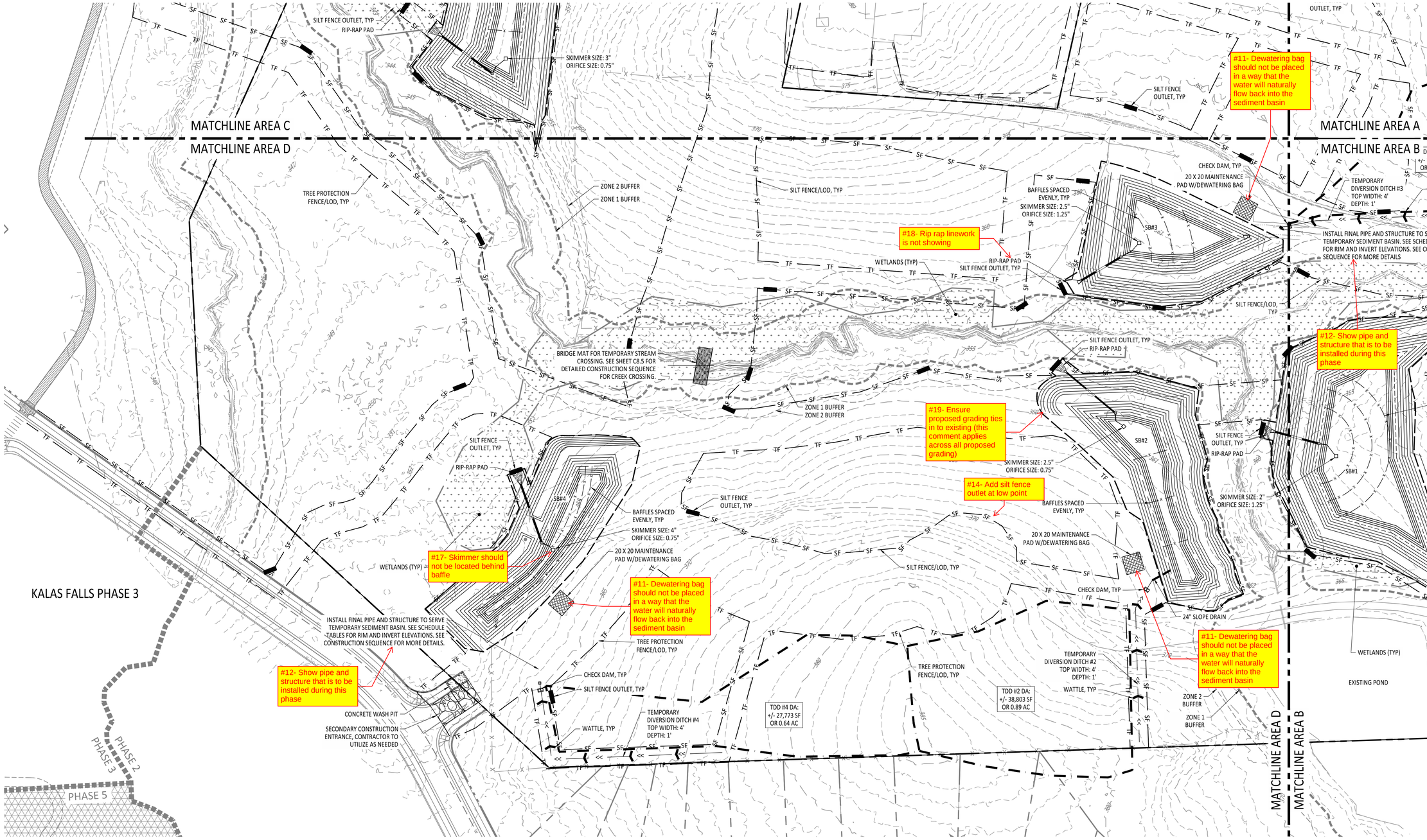

GENERAL NOTES:

1. SEE SHEET C7.0 FOR TEMPORARY DIVERSION DITCH SCHEDULE.

GRAPHIC SCALE

50 0 25 50 100 200

(IN FEET)
1 inch = 50

CITY OF RALEIGH - PLANS AUTHORIZED FOR CONSTRUCTION

Electronic Approval: This approval is being issued electronically. This approval is valid only upon the signature of a City of Raleigh Review Officer below. The City will retain a copy of the approved plans. Any work authorized by this approval must proceed in accordance with the plans kept on file with the City. This electronic approval may not be edited once issued. Any modification to this approval once issued will invalidate this approval.

City of Raleigh Development Approval _____

Raleigh Water Review Officer

North Carolina 811 Know what's below. Call before you dig.

*** 3 Days Before Digging ***
North Carolina 811
811 or 1-800-632-4949
Remote Ticket Entry
http://nc811.org/remoteticketentry.htm

AMERICAN Engineering
American Engineering Associates - Southeast, P.A.
4020 Westchase Boulevard, Suite 450
Raleigh, NC 27607
919-469-1101

NORTH CAROLINA AMERICAN ENGINEERING ASSOCIATES SOUTHEAST C-3881 CERTIFICATE OF AUTHORIZATION

PRELIMINARY

PRELIMINARY
DO NOT USE FOR CONSTRUCTION

NORTH CAROLINA PROFESSIONAL ENGINEER SEAL 045268 JACOB P. KLEIN
Digitally signed by Jacob Klein
2025.09.12 12:23:32 -04'00'

FOR INFORMATION ONLY

NO.	DATE:	REVISION:

STIPULATION FOR REUSE

THIS DRAWING WAS PREPARED FOR USE ON THE SPECIFIC SITE, NAMED HEREON, CONTEMPORANEOUSLY WITH ITS ISSUE DATE AS LISTED, HEREON. AND IT IS NOT SUITABLE FOR USE ON A DIFFERENT PROJECT SITE OR AT A LATER TIME. USE OF THIS DRAWING FOR REFERENCE OR EXAMPLE ON ANOTHER PROJECT REQUIRES THE SERVICES OF PROPERLY LICENSED ARCHITECTS AND ENGINEERS. REPRODUCTION OF THIS DRAWING FOR REUSE ON ANOTHER PROJECT IS NOT AUTHORIZED AND MAY BE CONTRARY TO THE LAW.

THE PRESERVE AT MOODY FARM

ROLESVILLE ROAD
WAKE COUNTY, NC

JOB NUMBER: 21-002
CHECKED BY: JK
DRAWN BY: RC & SM
DATE: 12/02/2024

SHEET TITLE:

EC STAGE 1 - AREA D

SHEET NO.:

C3.4

Z:\Jobs\21-002 Moody Development Trust (R210002)\dwg_Working Dwgs\Construction Sets\10-3-3-4 Erosion Control.dwg

December 2, 2024

GRAPHIC SCALE

100 0 50 100 200 400

(IN FEET)
1 inch =100

EROSION CONTROL LEGEND	
	EXISTING TOPOGRAPHY
	EXISTING BOUNDARY
	EXISTING WETLANDS AREA
	EXISTING 50' NEUSE RIPERIAN BUFFER
	EXISTING BUFFER ZONES
	PROPOSED LOT LINE
	PROPOSED EASEMENT
	PROPOSED 25 x 50 GRAVEL CONSTRUCTION ENTRANCE
	PROPOSED RIP RAP
	BASIN WEIR
	PROPOSED SEDIMENT BASIN
	PROPOSED INLET PROTECTION
	PROPOSED PIPE INLET PROTECTION
	PROPOSED CHECK DAM
	PROPOSED SF OUTLET
	GREENWAY TRAIL HATCH
	PROPOSED BASIN MAINTENANCE PAD
	PROPOSED WATTLE
SF	PROPOSED SILT FENCE
TF	PROPOSED TREE PROTECTION FENCE/ LIMITS OF DISTURBANCE
	DIVERSION DITCH DRAINAGE AREA
>>	PROPOSED DIVERSION DITCH
	PROPOSED JUNCTION BOX
	PROPOSED CATCH BASIN
	PROPOSED YARD INLET
	PROPOSED DROP INLET
	PROPOSED STORM WATER

CITY OF RALEIGH - PLANS AUTHORIZED FOR CONSTRUCTION

Electronic Approval: This approval is being issued electronically. This approval is valid only upon the signature of a City of Raleigh Review Officer below. The City will retain a copy of the approved plans. Any work authorized by this approval must proceed in accordance with the plans kept on file with the City. This electronic approval may not be edited once issued. Any modification to this approval once issued will invalidate this approval.

City of Raleigh Development Approval _____

Raleigh Water Review Officer

North Carolina 811 Call Before You Dig

*** 3 Days Before Digging ***
North Carolina 811
811 or 1-800-632-4949
Remote Ticket Entry
http://nc811.org/remoteticketentry.htm

AMERICAN Engineering
American Engineering Associates - Southeast, P.A.
4020 Westchase Boulevard, Suite 450
Raleigh, NC 27607
919-469-1101

NORTH CAROLINA CERTIFICATE OF AUTHORIZATION
AMERICAN ENGINEERING ASSOCIATES SOUTHEAST
C-3881

PRELIMINARY
NOT FOR CONSTRUCTION

NO.	DATE	REVISION:

STIPULATION FOR REUSE

THIS DRAWING WAS PREPARED FOR USE ON THE SPECIFIC SITE, NAMED HEREON, CONTEMPORANEOUSLY WITH ITS ISSUE DATE AS LISTED, HEREON, AND IT IS NOT SUITABLE FOR USE ON A DIFFERENT PROJECT SITE OR AT A LATER TIME. USE OF THIS DRAWING FOR REFERENCE OR EXAMPLE ON ANOTHER PROJECT REQUIRES THE SERVICES OF PROPERLY LICENSED ARCHITECTS AND ENGINEERS. REPRODUCTION OF THIS DRAWING FOR REUSE ON ANOTHER PROJECT IS NOT AUTHORIZED AND MAY BE CONTRARY TO THE LAW.

THE PRESERVE AT MOODY FARM

ROLESVILLE ROAD
WAKE COUNTY, NC

JOB NUMBER: 21-002
CHECKED BY: JK
DRAWN BY: RC & SM
DATE: 12/02/2024

SHEET TITLE:
OVERALL EC STAGE 2

SHEET NO.:
C3.5

Z:\Jobs\21-002 Moody Development Tract (R13003)\Field_Working Dwgs\Construction Set\3.0\3.4 Erosion Control.dwg December 3, 2024

GRAPHIC SCALE

50 0 25 50 100 200

(IN FEET)
1 inch = 50

CITY OF RALEIGH - PLANS AUTHORIZED FOR CONSTRUCTION

Electronic Approval: This approval is being issued electronically. This approval is valid only upon the signature of a City of Raleigh Review Officer below. The City will retain a copy of the approved plans. Any work authorized by this approval must proceed in accordance with the plans kept on file with the City. This electronic approval may not be edited once issued. Any modification to this approval once issued will invalidate this approval.

City of Raleigh Development Approval _____

Raleigh Water Review Officer

North Carolina 811

*** 3 Days Before Digging ***
North Carolina 811
811 or 1-800-632-4949
Remote Ticket Entry
http://nc811.org/remoteticketentry.htm

AMERICAN Engineering
American Engineering Associates - Southeast, P.A.
4020 Westchase Boulevard, Suite 450
Raleigh, NC 27607
919-469-1101

NORTH CAROLINA AMERICAN ENGINEERING ASSOCIATES SOUTHEAST C-3881 CERTIFICATE OF AUTHORIZATION

PRELIMINARY

PRELIMINARY
DO NOT USE FOR CONSTRUCTION

NORTH CAROLINA PROFESSIONAL ENGINEER SEAL 045282 JACOB P. KLEIN

Digitally signed by Jacob Klein
DN: cn=Jacob Klein, c=US, o=American Engineering Associates Southeast, ou=Engineering, email=jklein@aeasoutheast.com
Date: 2024.12.02 15:25:00 -05'00'

FOR INFORMATION, ONLY

NO.	DATE	REVISION:

STIPULATION FOR REUSE

THIS DRAWING WAS PREPARED FOR USE ON THE SPECIFIC SITE, NAMED HEREON, CONTEMPORANEOUSLY WITH ITS ISSUE DATE AS LISTED, HEREON, AND IT IS NOT SUITABLE FOR USE ON A DIFFERENT PROJECT SITE OR AT A LATER TIME. USE OF THIS DRAWING FOR REFERENCE OR EXAMPLE ON ANOTHER PROJECT REQUIRES THE SERVICES OF PROPERLY LICENSED ARCHITECTS AND ENGINEERS. REPRODUCTION OF THIS DRAWING FOR REUSE ON ANOTHER PROJECT IS NOT AUTHORIZED AND MAY BE CONTRARY TO THE LAW.

THE PRESERVE AT MOODY FARM

ROLESVILLE ROAD
WAKE COUNTY, NC

JOB NUMBER: 21-002
CHECKED BY: JK
DRAWN BY: RC & SM
DATE: 12/02/2024

SHEET TITLE:

EC STAGE 2 - AREA A

SHEET NO.:

C3.6

Z:\Jobs\21-002 Moody Development Tract (R21000)\Dwg_Working Dwgs\Construction Set\13-3-1-4 Erosion Control.dwg

December 2, 2024

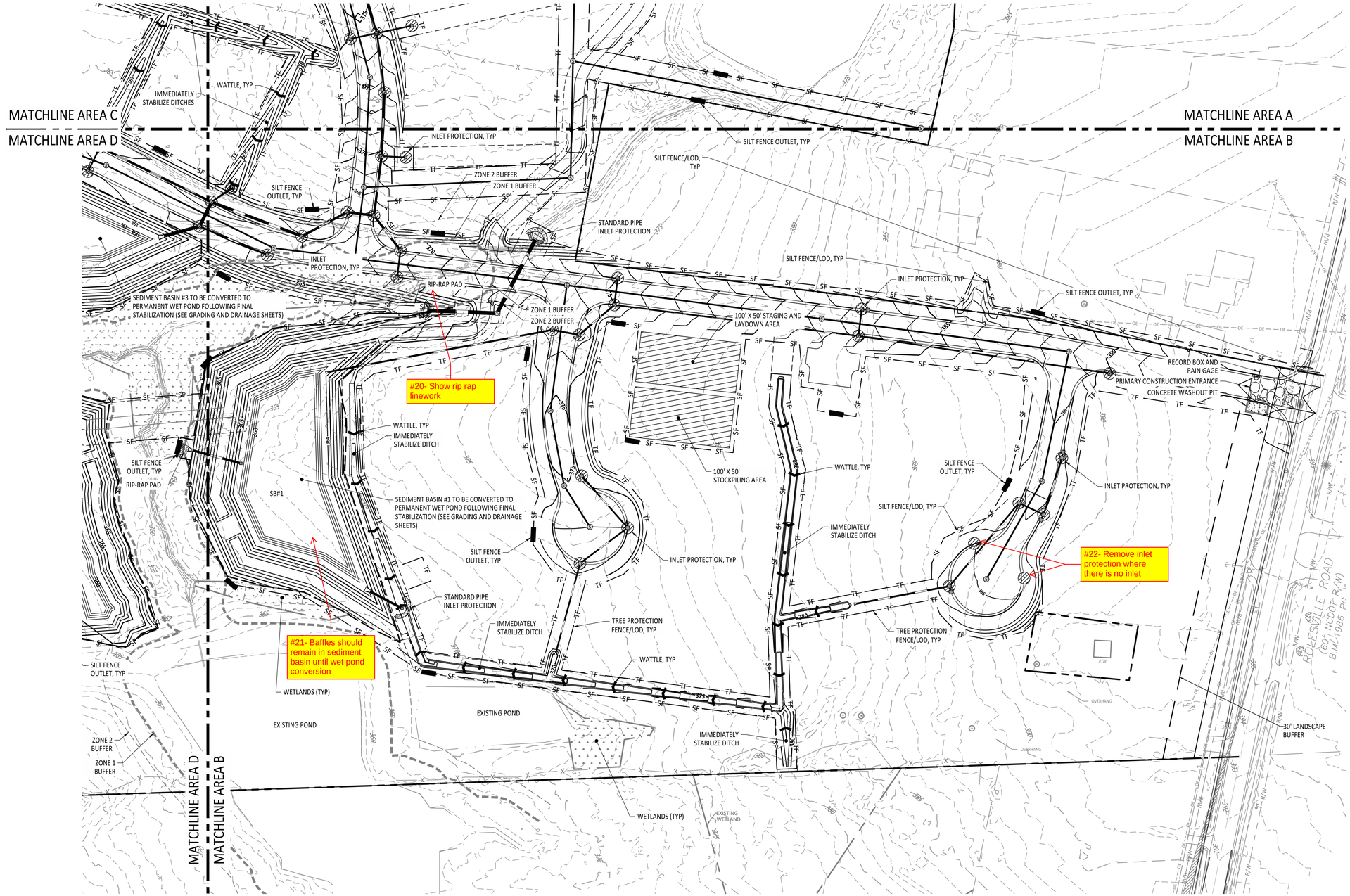

GRAPHIC SCALE

50 0 25 50 100 200

(IN FEET)
1 inch = 50

CITY OF RALEIGH - PLANS AUTHORIZED FOR CONSTRUCTION

Electronic Approval: This approval is being issued electronically. This approval is valid only upon the signature of a City of Raleigh Review Officer below. The City will retain a copy of the approved plans. Any work authorized by this approval must proceed in accordance with the plans kept on file with the City. This electronic approval may not be edited once issued. Any modification to this approval once issued will invalidate this approval.

City of Raleigh Development Approval _____

Raleigh Water Review Officer

North Carolina 811

*** 3 Days Before Digging ***
North Carolina 811
811 or 1-800-632-4949
Remote Ticket Entry
http://nc811.org/remoteticketentry.htm

AMERICAN Engineering
American Engineering Associates - Southeast, P.A.
4020 Westchase Boulevard, Suite 450
Raleigh, NC 27607
919-469-1101

NORTH CAROLINA AMERICAN ENGINEERING ASSOCIATES SOUTHEAST C-3881 CERTIFICATE OF AUTHORIZATION

PRELIMINARY

PRELIMINARY
DO NOT USE FOR CONSTRUCTION

NORTH CAROLINA PROFESSIONAL ENGINEER SEAL 045280 JACOB P. KLEIN
Digitally signed by Jacob Klein
DN: cn=Jacob Klein, o=AMERICAN ENGINEERING ASSOCIATES SOUTHEAST, ou=Engineering, email=jacob@aeasoutheast.com, c=US
Date: 2025.12.02 12:42:52 -05'00'

FOR INFORMATION, ONLY

NO.	DATE	REVISION:

STIPULATION FOR REUSE

THIS DRAWING WAS PREPARED FOR USE ON THE SPECIFIC SITE, NAMED HEREON, CONTEMPORANEOUSLY WITH ITS ISSUE DATE AS LISTED, HEREON. AND IT IS NOT SUITABLE FOR USE ON A DIFFERENT PROJECT SITE OR AT A LATER TIME. USE OF THIS DRAWING FOR REFERENCE OR EXAMPLE ON ANOTHER PROJECT REQUIRES THE SERVICES OF PROPERLY LICENSED ARCHITECTS AND ENGINEERS. REPRODUCTION OF THIS DRAWING FOR REUSE ON ANOTHER PROJECT IS NOT AUTHORIZED AND MAY BE CONTRARY TO THE LAW.

THE PRESERVE AT MOODY FARM

ROLESVILLE ROAD
WAKE COUNTY, NC

JOB NUMBER: 21-002
CHECKED BY: JK
DRAWN BY: RC & SM
DATE: 12/02/2024

SHEET TITLE:

EC STAGE 2 - AREA B

SHEET NO.:
C3.7

Z:\Jobs\21-002 Moody Development Tract (B210002)\dwg_Working Dwgs\Construction Set\10-3-1 Erosion Control.dwg
December 2, 2024

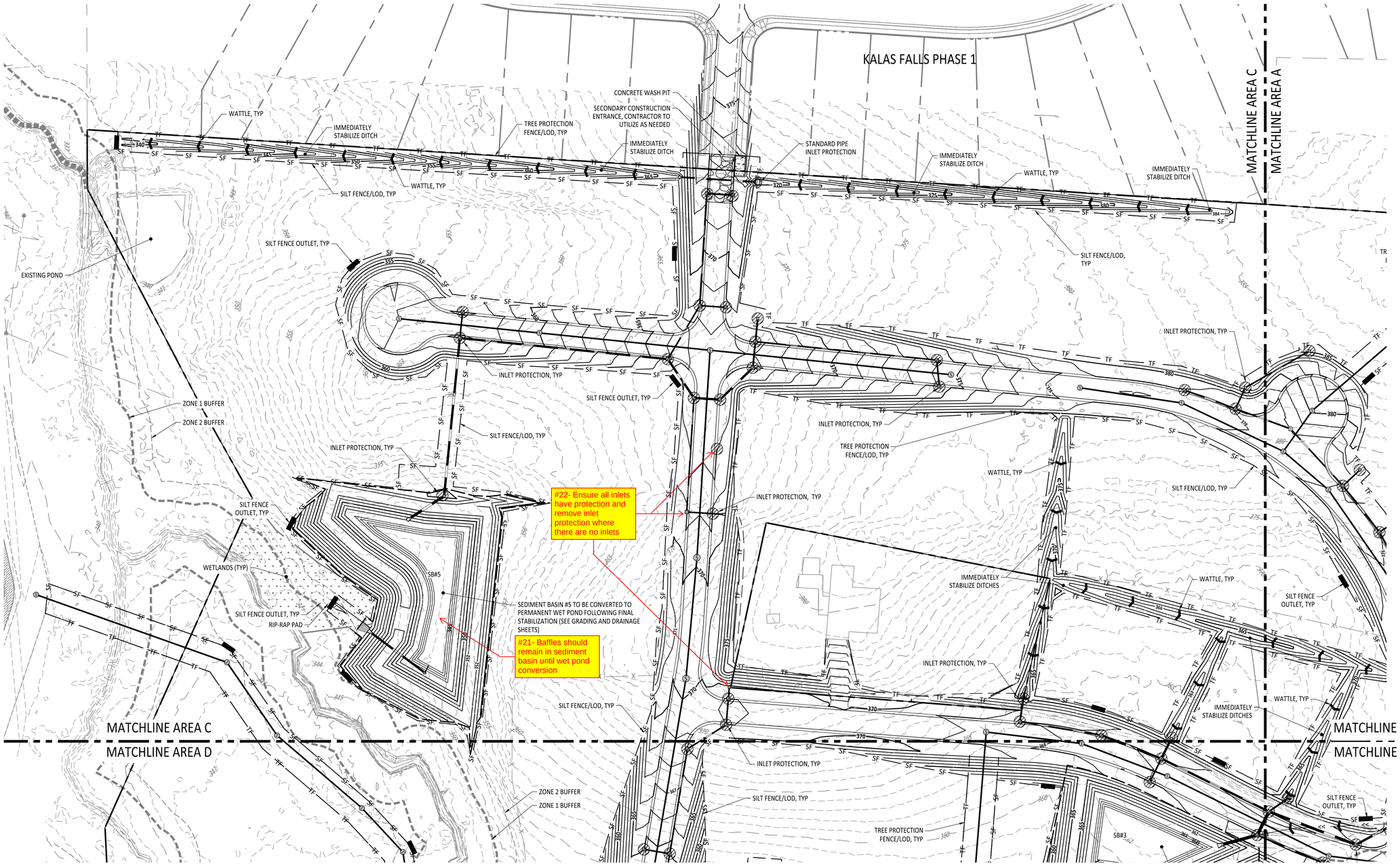

GRAPHIC SCALE

50 0 25 50 100 200

(IN FEET)
1 inch = 50

CITY OF RALEIGH - PLANS AUTHORIZED FOR CONSTRUCTION

Electronic Approval: This approval is being issued electronically. This approval is valid only upon the signature of a City of Raleigh Review Officer below. The City will retain a copy of the approved plans. Any work authorized by this approval must proceed in accordance with the plans kept on file with the City. This electronic approval may not be edited once issued. Any modification to this approval once issued will invalidate this approval.

City of Raleigh Development Approval _____

Raleigh Water Review Officer

North Carolina 811

*** 3 Days Before Digging ***
North Carolina 811
811 or 1-800-632-4949
Remote Ticket Entry
http://nc811.org/remoteticketentry.htm

AMERICAN Engineering
American Engineering Associates - Southeast, P.A.
4020 Westchase Boulevard, Suite 450
Raleigh, NC 27607
919-469-1101

NORTH CAROLINA AMERICAN ENGINEERING ASSOCIATES SOUTHEAST C-3881 CERTIFICATE OF AUTHORIZATION

PRELIMINARY

PRELIMINARY
DO NOT USE FOR CONSTRUCTION

NORTH CAROLINA PROFESSIONAL ENGINEER SEAL 265280 JACOB P. KLEIN
Digitally signed by
265280 Date: 2024.12.02

FOR INFORMATION, ONLY

NO.	DATE	REVISION:

STIPULATION FOR REUSE

THIS DRAWING WAS PREPARED FOR USE ON THE SPECIFIC SITE, NAMED HEREON, CONTEMPORANEOUSLY WITH ITS ISSUE DATE AS LISTED, HEREON, AND IT IS NOT SUITABLE FOR USE ON A DIFFERENT PROJECT SITE OR AT A LATER TIME. USE OF THIS DRAWING FOR REFERENCE OR EXAMPLE ON ANOTHER PROJECT REQUIRES THE SERVICES OF PROPERLY LICENSED ARCHITECTS AND ENGINEERS. REPRODUCTION OF THIS DRAWING FOR REUSE ON ANOTHER PROJECT IS NOT AUTHORIZED AND MAY BE CONTRARY TO THE LAW.

THE PRESERVE AT MOODY FARM

ROLESVILLE ROAD
WAKE COUNTY, NC

JOB NUMBER: 21-002
CHECKED BY: JK
DRAWN BY: RC & SM
DATE: 12/02/2024

SHEET TITLE:

EC STAGE 2 - AREA C

SHEET NO.:

C3.8

Z:\021-002 Moody Development Tract (R21000)\dwg_Working Dwgs\Construction Set\13-3-4 Erosion Control.dwg
December 2, 2024

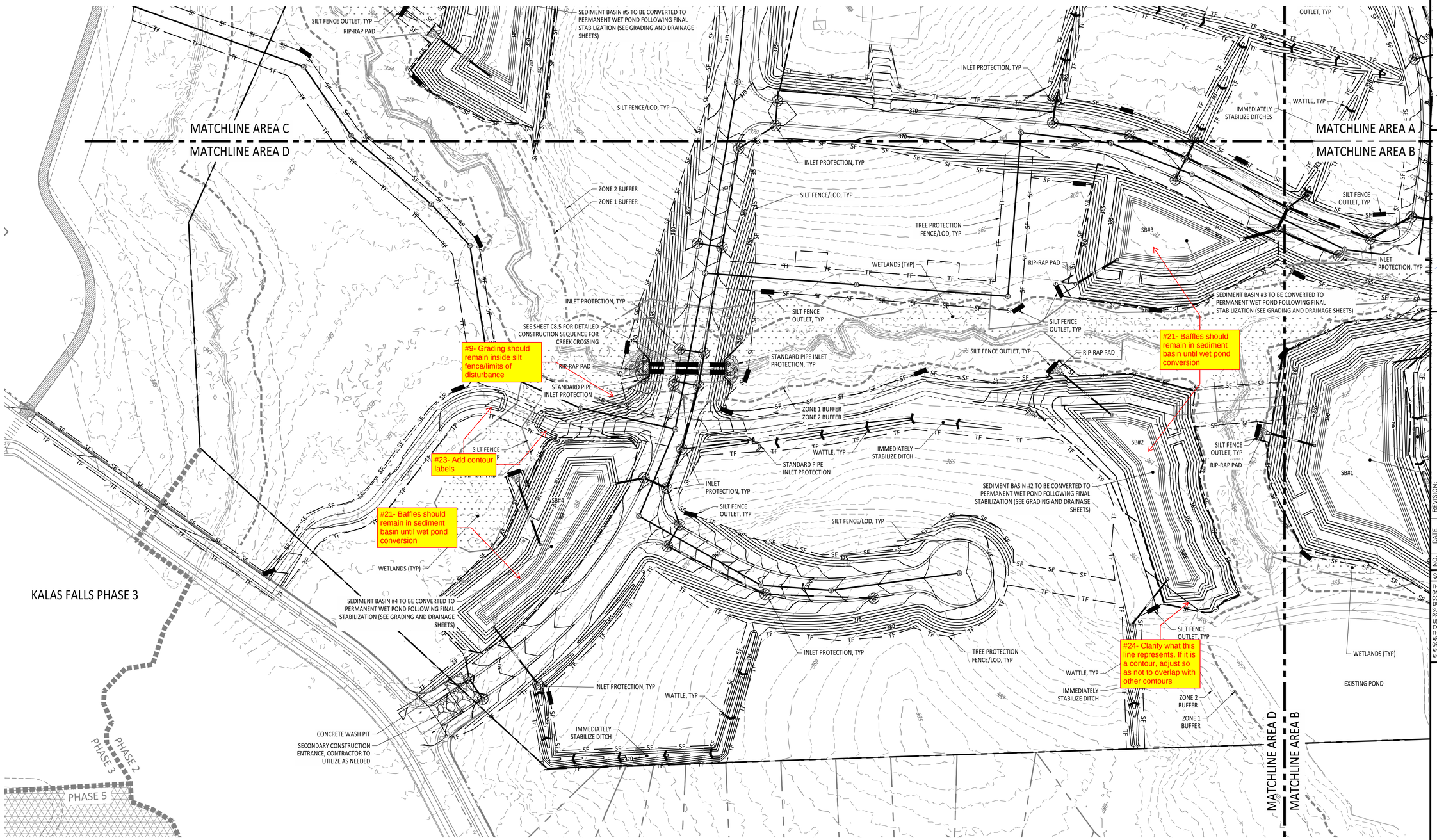

GRAPHIC SCALE

50 0 25 50 100 200

(IN FEET)
1 inch = 50

CITY OF RALEIGH - PLANS AUTHORIZED FOR CONSTRUCTION

Electronic Approval: This approval is being issued electronically. This approval is valid only upon the signature of a City of Raleigh Review Officer below. The City will retain a copy of the approved plans. Any work authorized by this approval must proceed in accordance with the plans kept on file with the City. This electronic approval may not be edited once issued. Any modification to this approval once issued will invalidate this approval.

City of Raleigh Development Approval _____

Raleigh Water Review Officer

North Carolina 811 Call Before You Dig

*** 3 Days Before Digging ***
North Carolina 811
811 or 1-800-632-4949
Remote Ticket Entry
http://nc811.org/remoteticketentry.htm

AMERICAN Engineering
American Engineering Associates - Southeast, P.A.
4020 Westchase Boulevard, Suite 450
Raleigh, NC 27607
919-469-1101

NORTH CAROLINA AMERICAN ENGINEERING ASSOCIATES SOUTHEAST C-3881 CERTIFICATE OF AUTHORIZATION

PRELIMINARY

PRELIMINARY
DO NOT USE FOR CONSTRUCTION

NORTH CAROLINA PROFESSIONAL ENGINEER SEAL 045280 JACOB P. KLEIN

Digitally signed by Jacob Klein
DN: cn=Jacob Klein, o=AMERICAN ENGINEERING ASSOCIATES SOUTHEAST, ou=Engineering, c=US
Date: 2025.12.02 15:38:32 -05'00'

FOR INFORMATION, ONLY

NO.	DATE	REVISION:

STIPULATION FOR REUSE

THIS DRAWING WAS PREPARED FOR USE ON THE SPECIFIC SITE, NAMED HEREON, CONTEMPORANEOUSLY WITH ITS ISSUE DATE AS LISTED, HEREON. AND IT IS NOT SUITABLE FOR USE ON A DIFFERENT PROJECT SITE OR AT A LATER TIME. USE OF THIS DRAWING FOR REFERENCE OR EXAMPLE ON ANOTHER PROJECT REQUIRES THE SERVICES OF PROPERLY LICENSED ARCHITECTS AND ENGINEERS. REPRODUCTION OF THIS DRAWING FOR REUSE ON ANOTHER PROJECT IS NOT AUTHORIZED AND MAY BE CONTRARY TO THE LAW.

THE PRESERVE AT MOODY FARM

ROLESVILLE ROAD
WAKE COUNTY, NC

JOB NUMBER: 21-002
CHECKED BY: JK
DRAWN BY: RC & SM
DATE: 12/02/2024

SHEET TITLE:

EC STAGE 2 - AREA D

SHEET NO.:
C3.9

Z:\Jobs\21-002 Moody Development Trust (R21002D)\dwg_Working Dwgs\Construction Set\10-3-4 Erosion Control.dwg

December 2, 2024

Stabilization Area	Site Area Description	Required Ground Stabilization Timeframes: Stabilize within this many calendar days after ceasing land disturbance	Timeframe variations
1	(a) Perimeter dikes, swales, ditches, and perimeter slopes	7	None
	(b) High Quality Water (HQW) Zones	7	None
	(c) Slopes steeper than 3:1	7	If slopes are 10' or less in length and are not steeper than 2:1, 14 days are allowed
2	(d) Slopes 3:1 to 4:1	14	-7 days for slopes greater than 50' in length and with slopes steeper than 4:1 -7 days for perimeter dikes, swales, ditches, perimeter slopes and HQW Zones -10 days for Falls Lake Watershed
3	(e) Areas with slopes flatter than 4:1	14	-7 days for perimeter dikes, swales, ditches, perimeter slopes and HQW Zones -10 days for Falls Lake Watershed unless there is zero slope

Note: After the permanent cessation of construction activities, any areas with temporary ground stabilization shall be converted to permanent ground stabilization as soon as practicable but in no case longer than 90 calendar days after the last land disturbing activity. Temporary ground stabilization shall be maintained in a manner to render the surface stable against accelerated erosion until permanent ground stabilization is achieved.

NDPES DOCUMENTATION NOTES

1. THIS PAGE IS SUBMITTED TO COMPLY WITH THE NPDES GENERAL STORMWATER PERMIT NCG010000.
2. THIS PAGE CAN BE APPROVED BY THE TOWN PURSUANT TO NPDES GENERAL STORMWATER PERMIT NCG010000 ONLY.
3. THIS PAGE OF THE APPROVED PLANS IS ENFORCEABLE EXCLUSIVELY PURSUANT TO NPDES GENERAL STORMWATER PERMIT NCG010000.
4. THE TOWN IS NOT AUTHORIZED TO ENFORCE THIS PAGE OF THE PLANS AND IT IS NOT A PART OF THE APPROVED PLANS FOR PURPOSES OF ENFORCEMENT ACTION UNDER THE CITY CODE.

NPDES STABILIZATION LEGEND

	NPDES STABILIZATION AREA 1
	NPDES STABILIZATION AREA 2
	NPDES STABILIZATION AREA 3

SEEDING SCHEDULE

SHOULDERS, SIDE DITCHES, SLOPES (Maximum 3:1)

Date	Type*	Planting Rate
Aug 15 - Nov 1	Tall Fescue or Hard Fescue	300 lb./acre
Nov 1 - Mar 1	Tall Fescue and Abriuzzi Rye or Annual Rye	300 lb./acre
Mar 1 - Apr 15	Tall Fescue or Hard Fescue	300 lb./acre
Apr 15 - June 30	Hulled common Bermuda grass, Weeping Love Grass	25 lb./acre
July 15 - Aug 15	Tall Fescue and ***Browntop Millet ***or Sorghum-Sudan Hybrids	35 lb./acre

SHOULDERS, SIDE DITCHES, SLOPES Slopes (3:1 and 2:1) (not mowed)

Date	Type*	Planting Rate
Mar 1 - Apr 15	Add Tall Fescue or	120 lb./acre
Mar 1 - June 30	Add Weeping Love Grass or	10 lb./acre
Mar 1 - June 30	Add Hulled Common Bermuda grass	25 lb./acre
June 1 - Sept 1	***Tall Fescue and ***Browntop Millet ***or Sorghum-Sudan Hybrids	120 lb./acre 35 lb./acre 30 lb./acre
Sept 1 - Mar 1	Tall Fescue Add Abruzzi Rye or Annual Rye	120 lb./acre 25 lb./acre

NOTES:
Consult Erosion Control Officer or NRCS for additional alternatives for vegetating denuded areas. The above vegetation rates are those which do well under local conditions; other seeding rate combinations are possible.
***Temporary - Reseed according to optimum season for desired permanent vegetation. Do not allow temporary cover to grow over 12 inches in height before mowing to keep fescue from being shaded out.
*Bahia grass shall not be used in City maintained areas.

SEEDBED PREPARATION

1. CHISEL COMPACTED AREAS AND SPREAD TOPSOIL 3 INCHES DEEP OVER ADVERSE SOIL CONDITIONS, IF AVAILABLE.
2. RIP THE ENTIRE AREA TO 6-INCH DEPTH.
3. REMOVE ALL LOOSE ROCK, ROOTS, AND OTHER OBSTRUCTIONS LEAVING SURFACE REASONABLY SMOOTH AND UNIFORM.
4. APPLY AGRICULTURAL LIME, FERTILIZER, AND SUPERPHOSPHATE UNIFORMLY AND MIX WITH SOIL (SEE BELOW *).
5. CONTINUE TILLAGE UNTIL A WELL-PULVERIZED, FIRM, REASONABLY UNIFORM SEEDBED IS PREPARED 4 TO 6 INCHES DEEP.
6. SEED ON FRESHLY PREPARED SEEDBED AND COVER SEED LIGHTLY WITH SEEDING EQUIPMENT OR CULTIPACK AFTER SEEDING.
7. MULCH IMMEDIATELY AFTER SEEDING AND ANCHOR MULCH.
8. INSPECT ALL SEEDED AREAS AND MAKE NECESSARY REPAIRS OR RESEEDINGS WITHIN THE PLANTING SEASON, IF POSSIBLE. IF STAND SHOULD BE OVER 60% DAMAGED, RE-ESTABLISHED FOLLOWING ORIGINAL LIME, FERTILIZER AND SEEDING RATES.
9. CONSULT CONSERVATION INSPECTOR ON MAINTENANCE TREATMENT AND FERTILIZATION AFTER PERMANENT COVER IS ESTABLISHED.

*APPLY: AGRICULTURAL LIMESTONE - 2 TONS/ACRE (3 TONS/ACRE IN CLAY SOILS)
FERTILIZER - 1,000 LB/ACRE - 10-10-10
SUPERPHOSPHATE - 500 LB/ACRE - 20% ANALYSIS
MULCH - 2 TONS/ACRE - SMALL GRAIN STRAW
ANCHOR - ASPHALT EMULSION @ 300 GALS/ACRE

GRAPHIC SCALE
100 0 50 100 200 400
(IN FEET)
1 inch =100

CITY OF RALEIGH - PLANS AUTHORIZED FOR CONSTRUCTION

Electronic Approval: This approval is being issued electronically. This approval is valid only upon the signature of a City of Raleigh Review Officer below. The City will retain a copy of the approved plans. Any work authorized by this approval must proceed in accordance with the plans kept on file with the City. This electronic approval may not be edited once issued. Any modification to this approval once issued will invalidate this approval.

City of Raleigh Development Approval _____

Raleigh Water Review Officer

North Carolina 811 Call Before You Dig!
*** 3 Days Before Digging ***
North Carolina 811
811 or 1-800-632-4949
Remote Ticket Entry
http://nc811.org/remoteticketentry.htm

AMERICAN Engineering
American Engineering Associates - Southeast, P.A.
4020 Westgate Boulevard, Suite 401-B
Raleigh, NC 27607
919-469-1101

NORTH CAROLINA AMERICAN ENGINEERING ASSOCIATES SOUTHEAST C-3881 CERTIFICATE OF AUTHORIZATION

PRELIMINARY NOT FOR CONSTRUCTION

NO.	DATE	REVISION:

STIPULATION FOR REUSE

THIS DRAWING WAS PREPARED FOR USE ON THE SPECIFIC SITE, NAMED HEREON, CONTEMPORANEOUSLY WITH ITS ISSUE DATE AS LISTED, HEREON, AND IT IS NOT SUITABLE FOR USE ON A DIFFERENT PROJECT SITE OR AT A LATER TIME. USE OF THIS DRAWING FOR REFERENCE OR EXAMPLE ON ANOTHER PROJECT REQUIRES THE SERVICES OF PROPERLY LICENSED ARCHITECTS AND ENGINEERS. REPRODUCTION OF THIS DRAWING FOR REUSE ON ANOTHER PROJECT IS NOT AUTHORIZED AND MAY BE CONTRARY TO THE LAW.

THE PRESERVE AT MOODY FARM
ROLESVILLE ROAD
WAKE COUNTY, NC

JOB NUMBER: 21-002
CHECKED BY: JK
DRAWN BY: RC & SM
DATE: 12/02/2024

SHEET TITLE:
NPDES PLAN

SHEET NO.:
C3.10

Z:\Jobs\21-002 Moody Development Tract (R130003)\Field_Working Dwgs\Construction Set\3.0 3.4 Erosion Control.dwg
December 3, 2024

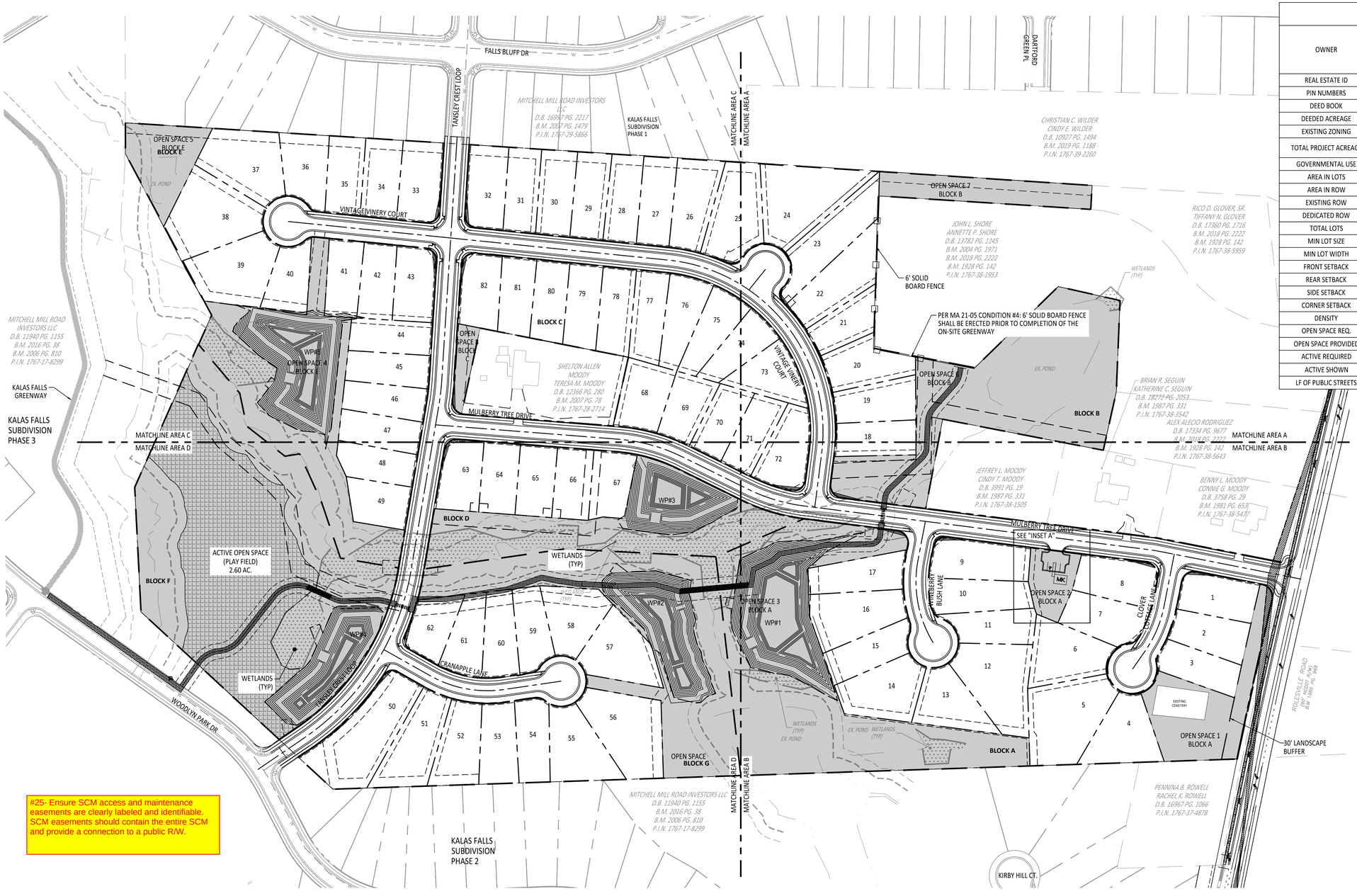

#25- Ensure SCM access and maintenance easements are clearly labeled and identifiable. SCM easements should contain the entire SCM and provide a connection to a public R/W.

SITE INFORMATION	
OWNER	HOLLINGSWORTH, W.C., JR. AND HOLLINGSWORTH, LAURA W. P.O.BOX 61 LOUISBURG NC 27549-0061 AND MOODY, BENNY LAWRENCE AND MOODY, JEFFREY LYNN 1716 ROLESVILLE RD, WAKE FOREST NC 27587-9677
REAL ESTATE ID	0048383 AND 0048422
PIN NUMBERS	1767284925 AND 1767284304
DEED BOOK	DB:017552 PG:02100 AND DB:014297 PG:01583
DEEDED ACREAGE	51.78 AC
EXISTING ZONING	R-3 CZ
TOTAL PROJECT ACREAGE	49.92 AC
GOVERNMENTAL USE	0.48 AC
AREA IN LOTS	24.38 AC
AREA IN ROW	6.54 AC
EXISTING ROW	0.27 AC
DEDICATED ROW	0.14 AC
TOTAL LOTS	82
MIN LOT SIZE	10,000 SF
MIN LOT WIDTH	65'
FRONT SETBACK	25'
REAR SETBACK	25'
SIDE SETBACK	10'
CORNER SETBACK	25'
DENSITY	1.6 UNIT/AC.
OPEN SPACE REQ.	10% / 5 AC.
OPEN SPACE PROVIDED	37% / 18.81 AC
ACTIVE REQUIRED	2.5 AC (50% OF 5 AC)
ACTIVE SHOWN	2.7 AC
LF OF PUBLIC STREETS	5,531 LF

SITE LEGEND	
	OPEN SPACE
	EXISTING WETLANDS
MK	MAIL KIOSK
	LOT LINES
	SETBACK
	PROPOSED ROW
	PROPOSED EOP
	PROPOSED CENTERLINE
	PROPOSED BACK OF CURB
	50' NEUSE RIPARIAN BUFFER
	BUFFER ZONE 1 AND 2
	TOP OF CREEK
	PROPOSED SCM
	PROPOSED FENCE
	SIGHT TRIANGLE

INSET A

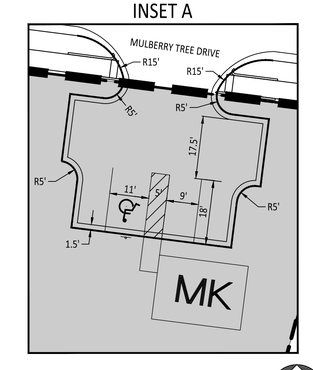

GRAPHIC SCALE

100 0 50 100 200 400

(IN FEET)
1 inch =100

NOTES:

1. SEWER ACCESS FROM ADJACENT DEVELOPMENT TO BE DETERMINED UPON FINAL LAYOUT.
2. STANDARD CROSSWALKS ARE TO BE 8' WHITE. W11-2 WITH W16-7P SIGNS WITH FLUORESCENT YELLOW-GREEN SHEETING. SEE 2.3 FOR HI-VISIBILITY CROSSWALK DETAIL.
3. GREENWAY TRAIL IS TO BE DESIGNED USING ASPHALT.

OPEN SPACE AREA	
OPEN SPACE ID	AREA
OPEN SPACE 1	27,618.61 SQ.FT / 0.63 AC
OPEN SPACE 2	10,948.31 SQ.FT / 0.25 AC
OPEN SPACE 3	307,966.02 SQ.FT / 7.07 AC
OPEN SPACE 4	308,915.69 SQ.FT / 7.09 AC
OPEN SPACE 5	19,503.67 SQ.FT / 0.45 AC
OPEN SPACE 6	103,461.21 / 2.38 AC.
OPEN SPACE 7	20,167.06 SQ.FT / 0.46 AC
OPEN SPACE 8	5,374.43 SQ.FT / 0.12 AC

KEYNOTE LEGEND:

1. CURB RAMP TYPE 1 MODIFIED
2. CURB RAMP TYPE 3 MODIFIED INSTALLATION IN A RADIUS
3. CURB RAMP TYPE 5A
4. CURB RAMP TYPE 3

GRAPHIC SCALE

20 0 10 20 40 80

(IN FEET)
1 inch = 20

CITY OF RALEIGH - PLANS AUTHORIZED FOR CONSTRUCTION

Electronic Approval: This approval is being issued electronically. This approval is valid only upon the signature of a City of Raleigh Review Officer below. The City will retain a copy of the approved plans. Any work authorized by this approval must proceed in accordance with the plans kept on file with the City. This electronic approval may not be edited once issued. Any modification to this approval once issued will invalidate this approval.

City of Raleigh Development Approval _____

Raleigh Water Review Officer

North Carolina 811

*** 3 Days Before Digging ***
North Carolina 811
811 or 1-800-632-4949
Remote Ticket Entry
http://nc811.org/remoteticketentry.htm

AMERICAN Engineering
American Engineering Associates - Southeast, P.A.
4020 Westchase Boulevard, Suite 450
Raleigh, NC 27607
919-469-1101

NORTH CAROLINA
AMERICAN ENGINEERING ASSOCIATES SOUTHEAST
C-3881
CERTIFICATE OF AUTHORIZATION

PRELIMINARY
DO NOT USE FOR CONSTRUCTION

Digitally signed by Jacob P. Kline
DN: c=US, st=North Carolina, l=Raleigh, o=American Engineering Associates Southeast, cn=Jacob P. Kline
Date: 2025.02.14 15:12:36 -05'00'

NO.	DATE	REVISION:

STIPULATION FOR REUSE

THIS DRAWING WAS PREPARED FOR USE ON THE SPECIFIC SITE, NAMED HEREON, CONTEMPORANEOUSLY WITH ITS ISSUE DATE AS LISTED, HEREON. AND IT IS NOT SUITABLE FOR USE ON A DIFFERENT PROJECT SITE OR AT A LATER TIME. USE OF THIS DRAWING FOR REFERENCE OR EXAMPLE ON ANOTHER PROJECT REQUIRES THE SERVICES OF PROPERLY LICENSED ARCHITECTS AND ENGINEERS. REPRODUCTION OF THIS DRAWING FOR REUSE ON ANOTHER PROJECT IS NOT AUTHORIZED AND MAY BE CONTRARY TO THE LAW.

THE PRESERVE AT MOODY FARM

ROLESVILLE ROAD
WAKE COUNTY, NC

JOB NUMBER: 21-002
CHECKED BY: JK
DRAWN BY: RC & SM
DATE: 12/02/2024

SHEET TITLE:

OVERALL SITE PLAN

SHEET NO.:

C4.0

Z:\Jobs\21-002 Moody Development Trust (R210002)\Dwg_Working Dwg\Construction Set\C4.0 & Site Plan.dwg

December 2, 2024

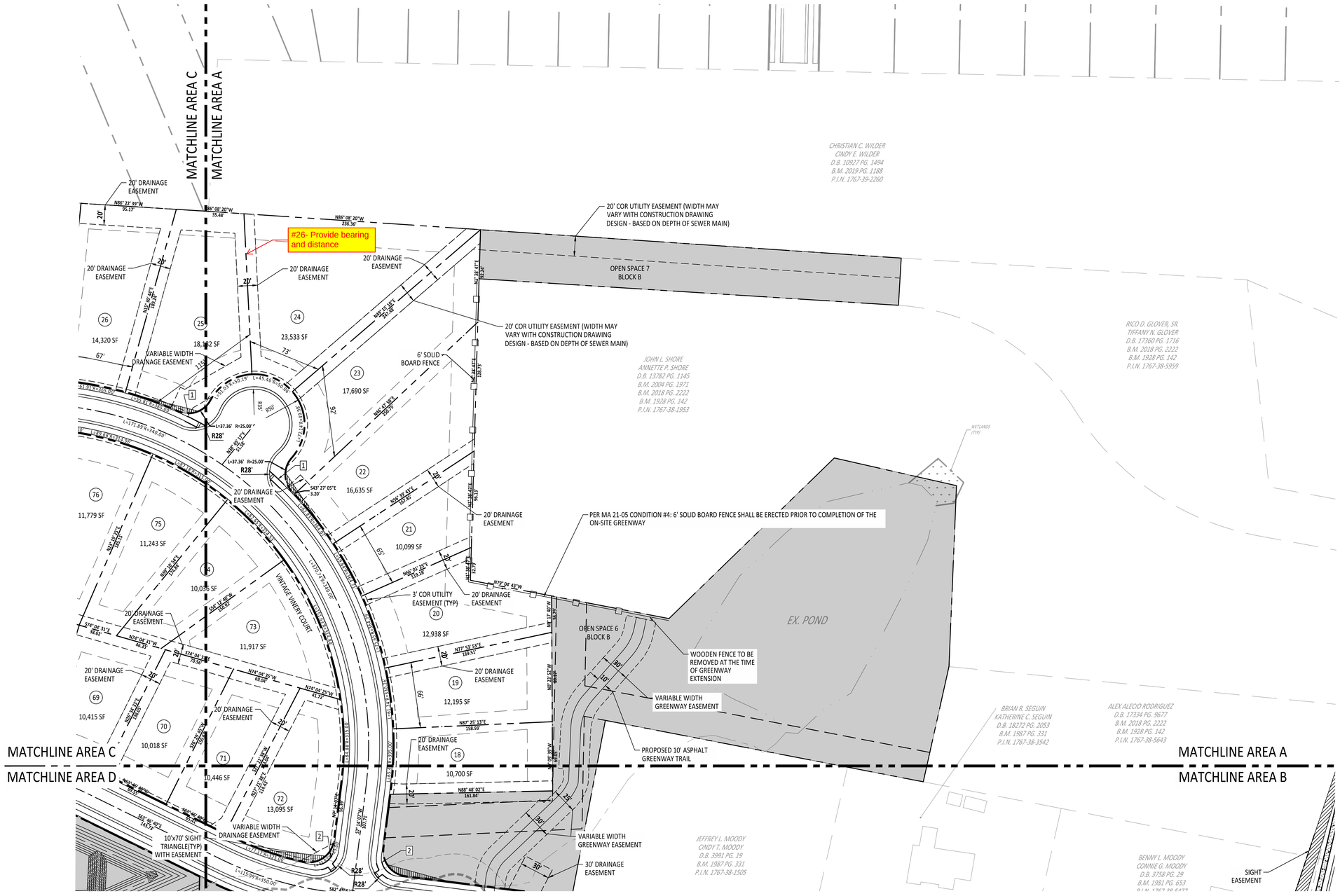

LOT INFORMATION	
	SETBACK LINES
MIN LOT WIDTH	65'
FRONT SETBACK	25'
FRONT SETBACK	25'
SIDE SETBACK	10'
CORNER SETBACK	25'

* SEE LOT 1 FOR TYPICAL SETBACK DIMENSION

NOTE:
TA 20-01 WAS ADAPTED 9-15-20, PERMITTING THE " DWELLING- SINGLE FAMILY DETACHED" USE IN THE R-3 DISTRICT, AND ESTABLISHED: MINIMUM LOT AREA OF 10,000 SF; MINIMUM LOT WIDTH 65'; FRONT YARD SETBACK OF 25'; SIDE YARD SETBACK OF 10'; CORNER YARD SETBACK OF 15'; REAR YARD SETBACK OF 25'

KEYNOTE LEGEND:

1. CURB RAMP TYPE 1 MODIFIED
2. CURB RAMP TYPE 3 MODIFIED INSTALLATION IN A RADIUS
3. CURB RAMP TYPE 5A
4. CURB RAMP TYPE 3

SITE LEGEND	
	OPEN SPACE
	EXISTING WETLANDS
MK	MAIL KIOSK
	LOT LINES
	SETBACK
	PROPOSED ROW
	PROPOSED EOP
	PROPOSED CENTERLINE
	PROPOSED BACK OF CURB
	50' NEUSE RIPARIAN BUFFER
	BUFFER ZONE 1 AND 2
	TOP OF CREEK
	PROPOSED SCM
	PROPOSED FENCE
	SIGHT TRIANGLE

GRAPHIC SCALE
50 0 25 50 100 200
(IN FEET)
1 inch = 50

CITY OF RALEIGH - PLANS AUTHORIZED FOR CONSTRUCTION

Electronic Approval: This approval is being issued electronically. This approval is valid only upon the signature of a City of Raleigh Review Officer below. The City will retain a copy of the approved plans. Any work authorized by this approval must proceed in accordance with the plans kept on file with the City. This electronic approval may not be edited once issued. Any modification to this approval once issued will invalidate this approval.

City of Raleigh Development Approval _____

Raleigh Water Review Officer

North Carolina 811
*** 3 Days Before Digging ***
North Carolina 811
811 or 1-800-632-4949
Remote Ticket Entry
http://nc811.org/remoteticketentry.htm

AMERICAN Engineering
American Engineering Associates - Southeast, P.A.
4020 Westchase Boulevard, Suite 450
Raleigh, NC 27607
919-469-1101

NORTH CAROLINA CERTIFICATE OF AUTHORIZATION
AMERICAN ENGINEERING ASSOCIATES SOUTHEAST
C-3881

PRELIMINARY - DO NOT USE FOR CONSTRUCTION
NORTH CAROLINA PROFESSIONAL ENGINEER SEAL
JACOB P. KLEIN
Digitally signed by Jacob Klein
DN: cn=Jacob Klein, c=US, o=American Engineering Associates, ou=Engineering, email=jacob@aeasoutheast.com
Date: 2025.02.03 10:18:37 -05'00'

NO.	DATE	REVISION:

STIPULATION FOR REUSE

THIS DRAWING WAS PREPARED FOR USE ON THE SPECIFIC SITE, NAMED HEREON, CONTEMPORANEOUSLY WITH ITS ISSUE DATE AS LISTED, HEREON, AND IT IS NOT SUITABLE FOR USE ON A DIFFERENT PROJECT SITE OR AT A LATER TIME. USE OF THIS DRAWING FOR REFERENCE OR EXAMPLE ON ANOTHER PROJECT REQUIRES THE SERVICES OF PROPERLY LICENSED ARCHITECTS AND ENGINEERS. REPRODUCTION OF THIS DRAWING FOR REUSE ON ANOTHER PROJECT IS NOT AUTHORIZED AND MAY BE CONTRARY TO THE LAW.

THE PRESERVE AT MOODY FARM
ROLESVILLE ROAD
WAKE COUNTY, NC

JOB NUMBER: 21-002
CHECKED BY: JK
DRAWN BY: RC & SM
DATE: 12/02/2024

SHEET TITLE:

SITE PLAN A

SHEET NO.:

C4.1

Z:\Jobs\21-002 Moody Development Tract (R2120023)\Awg_Working Dwgs\Construction Set\4.0-4.6 Site Plan.dwg
December 2, 2024

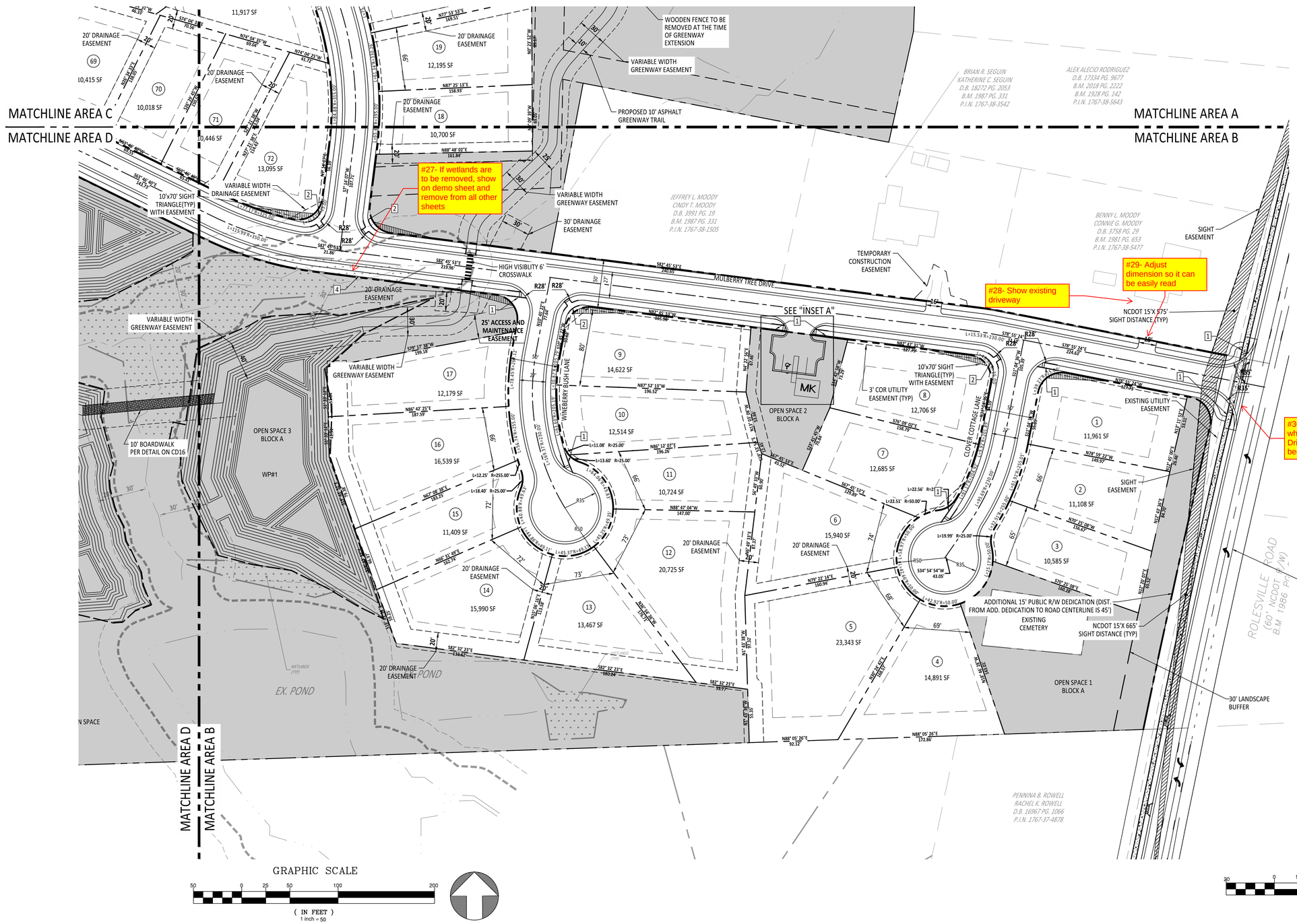

KEYNOTE LEGEND:

1. CURB RAMP TYPE 1 MODIFIED
2. CURB RAMP TYPE 3 MODIFIED INSTALLATION IN A RADIUS
3. CURB RAMP TYPE 5A
4. CURB RAMP TYPE 3

SITE LEGEND	
	OPEN SPACE
	EXISTING WETLANDS
MK	MAIL KIOSK
	LOT LINES
	SETBACK
	PROPOSED ROW
	PROPOSED EOP
	PROPOSED CENTERLINE
	PROPOSED BACK OF CURB
	50' NEUSE RIPARIAN BUFFER
	BUFFER ZONE 1 AND 2
	TOP OF CREEK
	PROPOSED SCM
	PROPOSED FENCE
	SIGHT TRIANGLE

INSET A

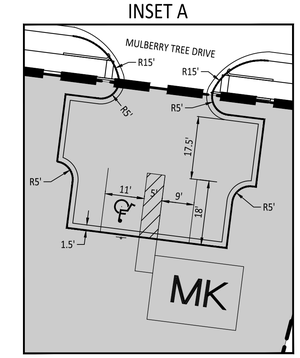

GRAPHIC SCALE
(IN FEET)
1 inch = 20

CITY OF RALEIGH - PLANS AUTHORIZED FOR CONSTRUCTION

Electronic Approval: This approval is being issued electronically. This approval is valid only upon the signature of a City of Raleigh Review Officer below. The City will retain a copy of the approved plans. Any work authorized by this approval must proceed in accordance with the plans kept on file with the City. This electronic approval may not be edited once issued. Any modification to this approval once issued will invalidate this approval.

City of Raleigh Development Approval _____

Raleigh Water Review Officer

North Carolina 811 — *** 3 Days Before Digging ***
North Carolina 811
811 or 1-800-632-4949
Remote Ticket Entry
http://nc811.org/remoteticketentry.htm

AMERICAN Engineering
American Engineering Associates - Southeast, P.A.
4020 Westchase Boulevard, Suite 450
Raleigh, NC 27607
919-469-1101

NORTH CAROLINA — AMERICAN ENGINEERING ASSOCIATES SOUTHEAST — C-3881 — CERTIFICATE OF AUTHORIZATION

PRELIMINARY — DO NOT USE FOR CONSTRUCTION — NORTH CAROLINA PROFESSIONAL ENGINEER SEAL — JACOB P. KLEIN — Digitally signed by Jacob Klein — 2025.08.07 12:24:39-04'00'

NO.	DATE	REVISION:

STIPULATION FOR REUSE

THIS DRAWING WAS PREPARED FOR USE ON THE SPECIFIC SITE, NAMED HEREON, CONTEMPORANEOUSLY WITH ITS ISSUE DATE AS LISTED, HEREON. AND IT IS NOT SUITABLE FOR USE ON A DIFFERENT PROJECT SITE OR AT A LATER TIME. USE OF THIS DRAWING FOR REFERENCE OR EXAMPLE ON ANOTHER PROJECT REQUIRES THE SERVICES OF PROPERLY LICENSED ARCHITECTS AND ENGINEERS. REPRODUCTION OF THIS DRAWING FOR REUSE ON ANOTHER PROJECT IS NOT AUTHORIZED AND MAY BE CONTRARY TO THE LAW.

THE PRESERVE AT MOODY FARM
ROLESVILLE ROAD
WAKE COUNTY, NC

JOB NUMBER: 21-002
CHECKED BY: JK
DRAWN BY: RC & SM
DATE: 12/02/2024

SHEET TITLE:

SITE PLAN B

SHEET NO.:

C4.2

Z:\Jobs\21-002 Moody Development Tract (8212002)\dwg_Working Dwgs\Construction Set\4.0-4.5-Site Plan.dwg December 2, 2024

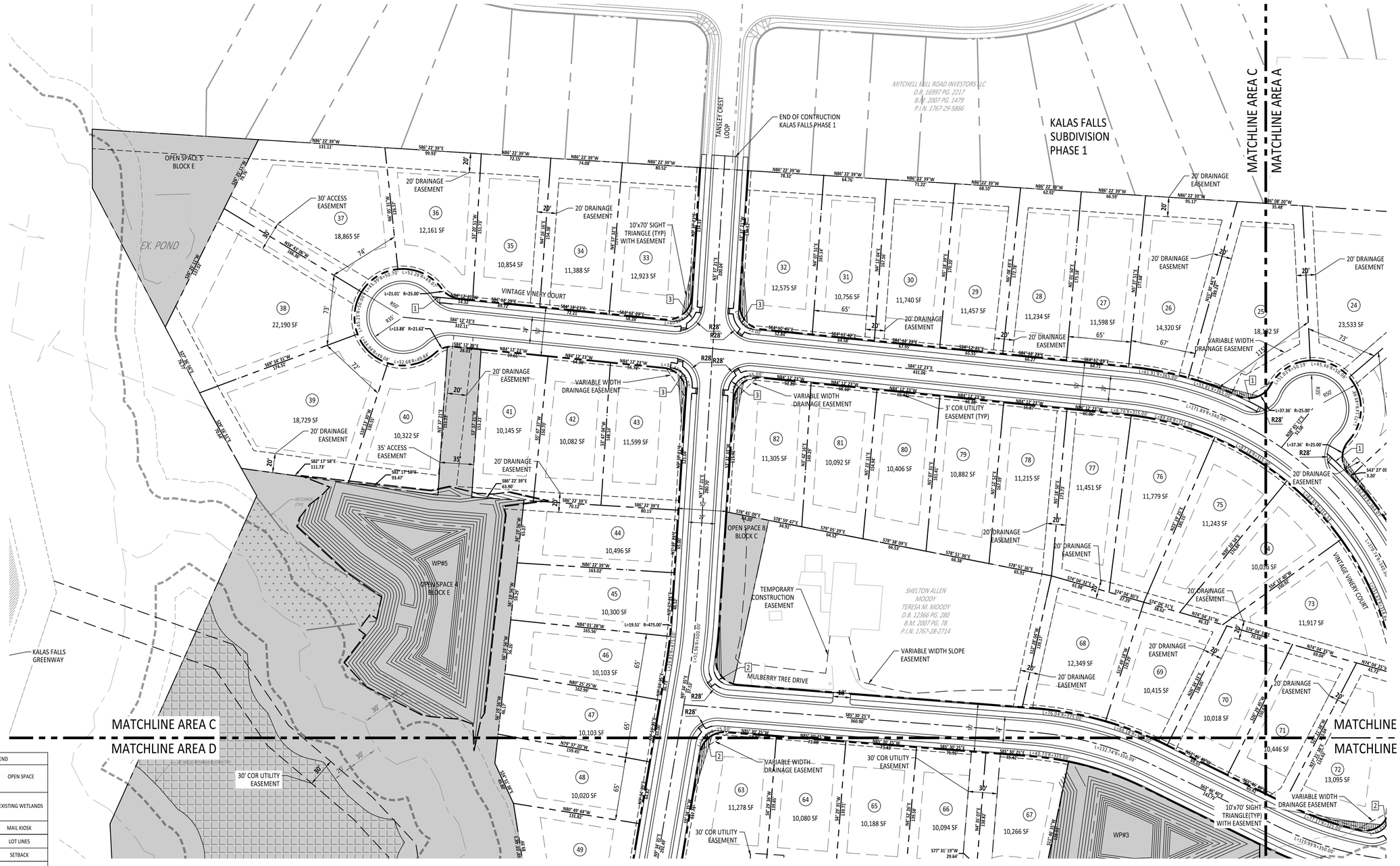

SITE LEGEND	
	OPEN SPACE
	EXISTING WETLANDS
MK	MAIL KIOSK
	LOT LINES
	SETBACK
	PROPOSED ROW
	PROPOSED EOP
	PROPOSED CENTERLINE
	PROPOSED BACK OF CURB
	50' NEUSE RIPARIAN BUFFER
	BUFFER ZONE 1 AND 2
	TOP OF CREEK
	PROPOSED SCM
	PROPOSED FENCE
	SIGHT TRIANGLE

KEYNOTE LEGEND:

1. CURB RAMP TYPE 1 MODIFIED
2. CURB RAMP TYPE 3 MODIFIED INSTALLATION IN A RADIUS
3. CURB RAMP TYPE 5A
4. CURB RAMP TYPE 3

GRAPHIC SCALE

50 0 25 50 100 200

(IN FEET)
1 inch = 50

CITY OF RALEIGH - PLANS AUTHORIZED FOR CONSTRUCTION

Electronic Approval: This approval is being issued electronically. This approval is valid only upon the signature of a City of Raleigh Review Officer below. The City will retain a copy of the approved plans. Any work authorized by this approval must proceed in accordance with the plans kept on file with the City. This electronic approval may not be edited once issued. Any modification to this approval once issued will invalidate this approval.

City of Raleigh Development Approval _____

Raleigh Water Review Officer

North Carolina 811 Partner

*** 3 Days Before Digging ***
North Carolina 811
811 or 1-800-632-4949
Remote Ticket Entry
http://nc811.org/remoteticketentry.htm

AMERICAN Engineering
American Engineering Associates - Southeast, P.A.
4020 Westchase Boulevard, Suite 450
Raleigh, NC 27607
919-469-1101

NORTH CAROLINA AMERICAN ENGINEERING ASSOCIATES SOUTHEAST C-3881 CERTIFICATE OF AUTHORIZATION

PRELIMINARY DO NOT USE FOR CONSTRUCTION

NORTH CAROLINA PROFESSIONAL ENGINEER SEAL 045282 JACOB P. KLEIN

Digitally signed by Jacob Klein
265.2600 Jacob Klein

NO.	DATE	REVISION:

STIPULATION FOR REUSE

THIS DRAWING WAS PREPARED FOR USE ON THE SPECIFIC SITE, NAMED HEREON, CONTEMPORANEOUSLY WITH ITS ISSUE DATE AS LISTED, HEREON, AND IT IS NOT SUITABLE FOR USE ON A DIFFERENT PROJECT SITE OR AT A LATER TIME. USE OF THIS DRAWING FOR REFERENCE OR EXAMPLE ON ANOTHER PROJECT REQUIRES THE SERVICES OF PROPERLY LICENSED ARCHITECTS AND ENGINEERS. REPRODUCTION OF THIS DRAWING FOR REUSE ON ANOTHER PROJECT IS NOT AUTHORIZED AND MAY BE CONTRARY TO THE LAW.

THE PRESERVE AT MOODY FARM

ROLESVILLE ROAD
WAKE COUNTY, NC

JOB NUMBER: 21-002
CHECKED BY: JK
DRAWN BY: RC & SM
DATE: 12/02/2024

SHEET TITLE:

SITE PLAN C

SHEET NO.:

C4.3

Z:\021\21-002 Moody Development Tract (R21000)\dwg_Working Dwgs\Construction Set\C4.0-4.6 Site Plan.dwg
December 2, 2024

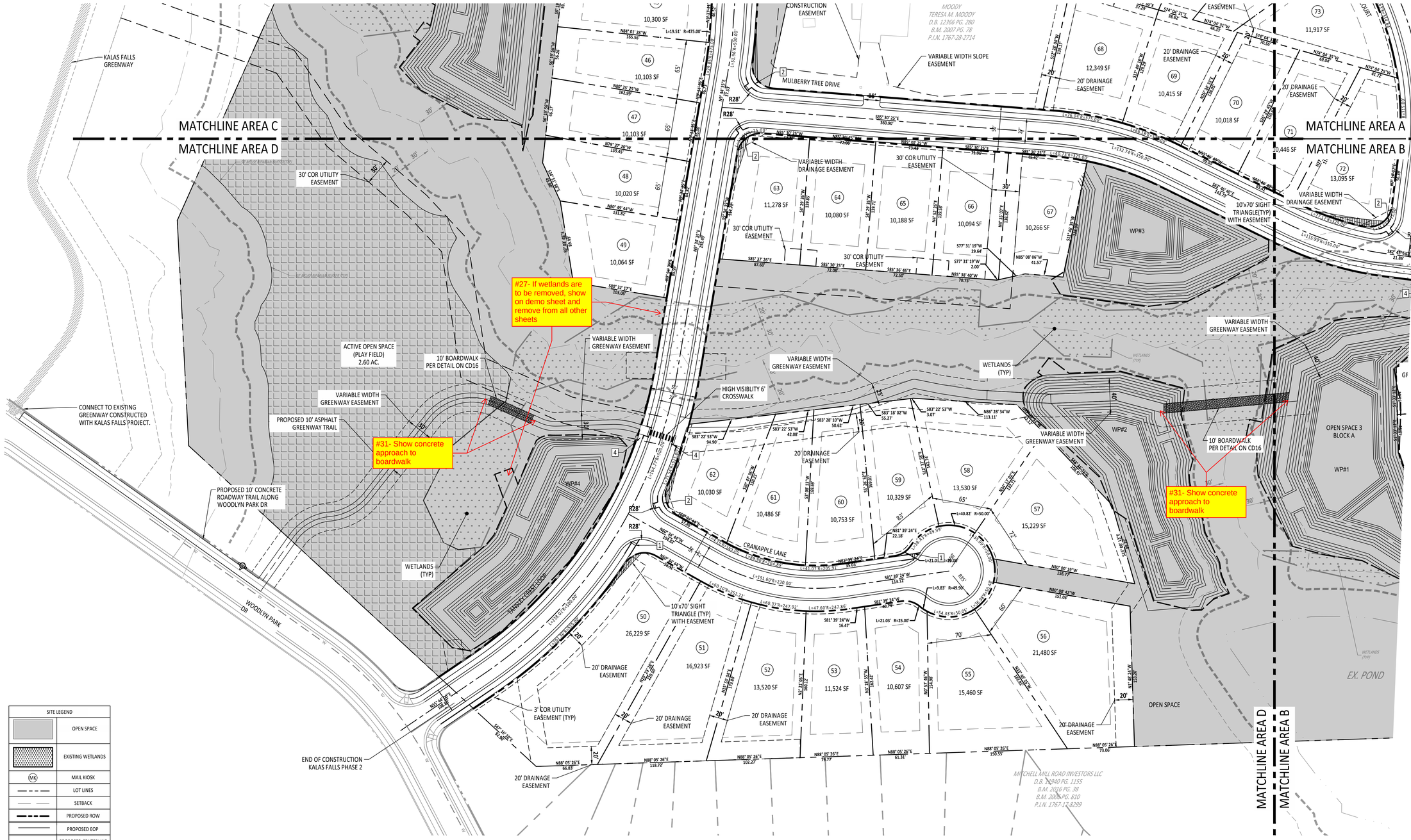

SITE LEGEND	
	OPEN SPACE
	EXISTING WETLANDS
MK	MAIL KIOSK
	LOT LINES
	SETBACK
	PROPOSED ROW
	PROPOSED EOP
	PROPOSED CENTERLINE
	PROPOSED BACK OF CURB
	50' NEUSE RIPARIAN BUFFER
	BUFFER ZONE 1 AND 2
	TOP OF CREEK
	PROPOSED SCM
	PROPOSED FENCE
	SIGHT TRIANGLE

KEYNOTE LEGEND:

1. CURB RAMP TYPE 1 MODIFIED
2. CURB RAMP TYPE 3 MODIFIED INSTALLATION IN A RADIUS
3. CURB RAMP TYPE 5A
4. CURB RAMP TYPE 3

GRAPHIC SCALE

50 0 25 50 100 200

(IN FEET)
1 inch = 50

CITY OF RALEIGH - PLANS AUTHORIZED FOR CONSTRUCTION

Electronic Approval: This approval is being issued electronically. This approval is valid only upon the signature of a City of Raleigh Review Officer below. The City will retain a copy of the approved plans. Any work authorized by this approval must proceed in accordance with the plans kept on file with the City. This electronic approval may not be edited once issued. Any modification to this approval once issued will invalidate this approval.

City of Raleigh Development Approval _____

Raleigh Water Review Officer

North Carolina 811 Know what's below. Call before you dig.

*** 3 Days Before Digging ***
North Carolina 811
811 or 1-800-632-4949
Remote Ticket Entry
http://nc811.org/remoteticketentry.htm

AMERICAN Engineering
American Engineering Associates - Southeast, P.A.
4020 Westchase Boulevard, Suite 450
Raleigh, NC 27607
919-469-1101

NORTH CAROLINA AMERICAN ENGINEERING ASSOCIATES SOUTHEAST C-3881 CERTIFICATE OF AUTHORIZATION

PRELIMINARY DO NOT USE FOR CONSTRUCTION
NORTH CAROLINA PROFESSIONAL ENGINEER SEAL 045282 JAKOB P. KLEIN
Digitally signed by
2025.08.07 10:24:22

NO.	DATE	REVISION:

STIPULATION FOR REUSE

THIS DRAWING WAS PREPARED FOR USE ON THE SPECIFIC SITE, NAMED HEREON, CONTEMPORANEOUSLY WITH ITS ISSUE DATE AS LISTED, HEREON, AND IT IS NOT SUITABLE FOR USE ON A DIFFERENT PROJECT SITE OR AT A LATER TIME. USE OF THIS DRAWING FOR REFERENCE OR EXAMPLE ON ANOTHER PROJECT REQUIRES THE SERVICES OF PROPERLY LICENSED ARCHITECTS AND ENGINEERS. REPRODUCTION OF THIS DRAWING FOR REUSE ON ANOTHER PROJECT IS NOT AUTHORIZED AND MAY BE CONTRARY TO THE LAW.

THE PRESERVE AT MOODY FARM
ROLESVILLE ROAD
WAKE COUNTY, NC

JOB NUMBER: 21-002
CHECKED BY: JK
DRAWN BY: RC & SM
DATE: 12/02/2024

SHEET TITLE:

SITE PLAN D

SHEET NO.:

C4.4

Z:\Jobs\21-002 Moody Development Trust (R21002)\dwg_Working Dwgs\Construction Set\4-0-4.5-Site Plan.dwg
December 2, 2024

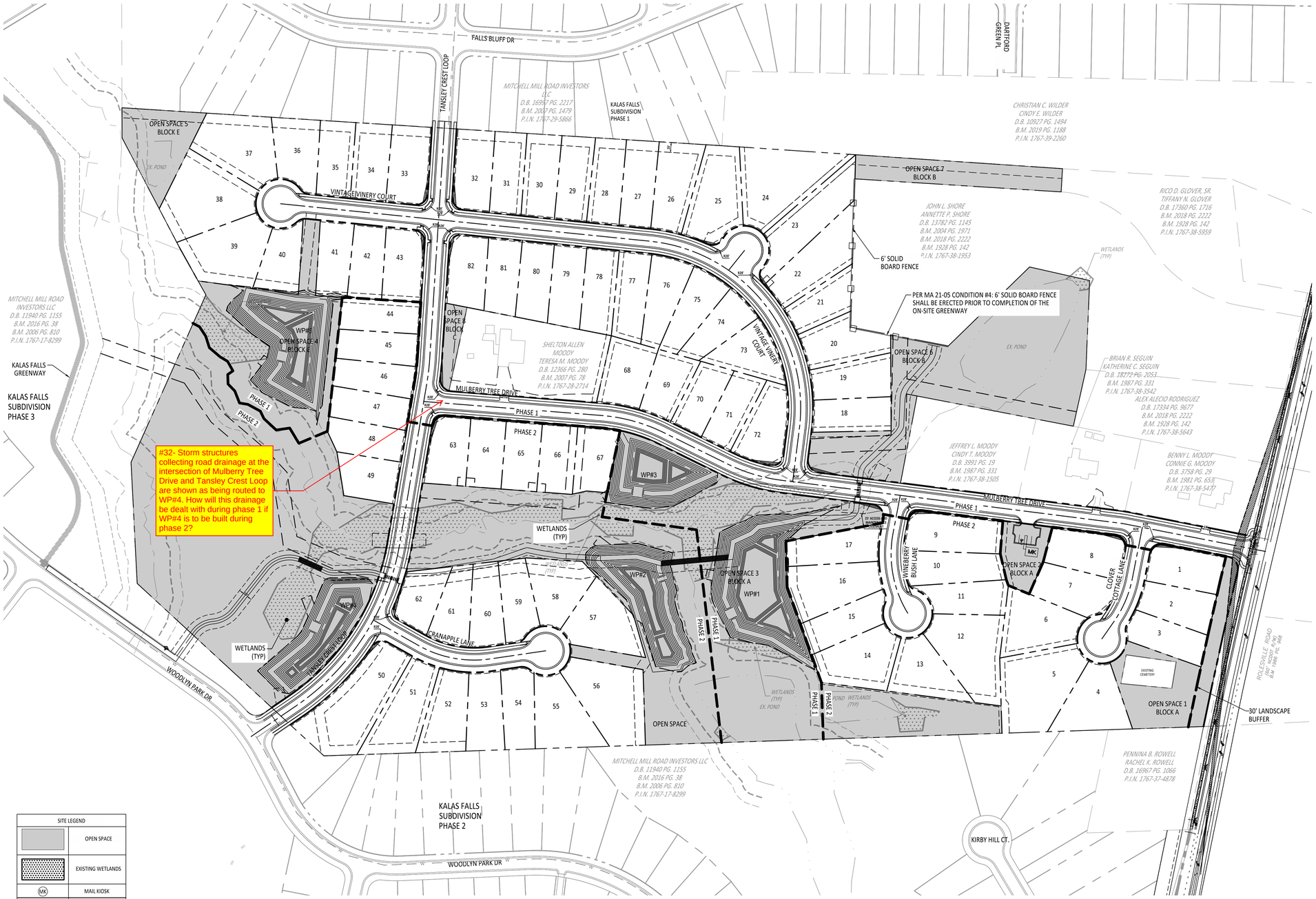

PHASE 1	LOT SQ.FT	BLOCK IDENTIFICATION
18	10,700	E
19	12,195	E
20	12,938	E
21	10,099	E
22	16,635	E
23	17,690	E
24	23,533	E
25	18,182	E
26	14,320	E
27	11,598	E
28	11,234	E
29	11,457	E
30	11,740	E
31	10,642	E
32	12,680	E
33	12,923	F
34	11,388	F
35	10,854	F
36	12,161	F
37	18,865	F
38	22,190	F
39	18,729	F
40	10,322	F
41	10,145	F
42	10,082	F
43	11,599	F

PHASE 1	LOT SQ.FT	BLOCK IDENTIFICATION
68	12,349	D
69	10,415	D
70	10,018	D
71	10,446	D
72	13,095	D
73	11,917	D
74	10,036	D
75	11,243	D
76	11,779	D
77	11,451	D
78	11,215	D
79	10,882	D
80	10,406	D
81	10,092	D
82	11,305	D

PHASE 2	LOT SQ.FT	BLOCK IDENTIFICATION
1	11,961	A
2	11,108	A
3	10,585	A
4	14,891	A
5	23,343	A
6	15,940	A
7	12,685	A
8	12,706	A
9	14,622	A
10	12,514	A
11	10,724	A
12	20,725	A
13	13,467	A
14	15,990	A
15	11,409	A
16	16,539	A
17	12,179	A
44	10,496	F
45	10,300	F
46	10,103	F
47	10,103	F
48	10,020	F
49	10,064	F
50	26,229	B
51	16,923	B
52	13,520	B

PHASE 2	LOT SQ.FT	BLOCK IDENTIFICATION
53	11,524	B
54	10,607	B
55	15,460	B
56	21,480	B
57	15,229	B
58	13,530	B
59	10,329	B
60	10,753	B
61	10,486	B
62	10,030	B
63	11,278	C
64	10,080	C
65	10,188	C
66	10,094	C
67	10,266	C

TOTAL NUMBER OF LOTS

PHASE 1 - 41 LOTS
PHASE 1 -12,721 SF AVERAGE LOT SIZE

PHASE 2 - 41 LOTS
PHASE 2 - 13,182 SF AVERAGE LOT SIZE

SITE LEGEND	
	OPEN SPACE
	EXISTING WETLANDS
MK	MAIL KIOSK
	LOT LINES
	SETBACK
	PROPOSED ROW
	PROPOSED EOP
	PROPOSED CENTERLINE
	PROPOSED BACK OF CURB
	50' NEUSE RIPARIAN BUFFER
	BUFFER ZONE 1 AND 2
	TOP OF CREEK
	PROPOSED SCM
	PROPOSED FENCE
	SIGHT TRIANGLE

GRAPHIC SCALE

100 0 50 100 200 400

(IN FEET)
1 inch =100

CITY OF RALEIGH - PLANS AUTHORIZED FOR CONSTRUCTION

Electronic Approval: This approval is being issued electronically. This approval is valid only upon the signature of a City of Raleigh Review Officer below. The City will retain a copy of the approved plans. Any work authorized by this approval must proceed in accordance with the plans kept on file with the City. This electronic approval may not be edited once issued. Any modification to this approval once issued will invalidate this approval.

City of Raleigh Development Approval _____

Raleigh Water Review Officer

North Carolina 811 Call Before You Dig!

*** 3 Days Before Digging ***
North Carolina 811
811 or 1-800-632-4949
Remote Ticket Entry
http://nc811.org/remoteticketentry.htm

AMERICAN Engineering
American Engineering Associates - Southeast, P.A.
4020 Westchase Boulevard, Suite 450
Raleigh, NC 27607
919-469-1101

NORTH CAROLINA AMERICAN ENGINEERING ASSOCIATES SOUTHEAST C-3881 CERTIFICATE OF AUTHORIZATION

PRELIMINARY DO NOT USE FOR CONSTRUCTION

NORTH CAROLINA PROFESSIONAL ENGINEER JACOB P. KLEIN

Digitally signed by Jacob P. Klein
DN: cn=Jacob P. Klein, o=American Engineering Associates Southeast, ou=Engineering, c=US
Date: 2024.12.02 15:12:42 -05'00'

NO.	DATE	REVISION:

STIPULATION FOR REUSE

THIS DRAWING WAS PREPARED FOR USE ON THE SPECIFIC SITE, NAMED HEREON, CONTEMPORANEOUSLY WITH ITS ISSUE DATE AS LISTED, HEREON, AND IT IS NOT SUITABLE FOR USE ON A DIFFERENT PROJECT SITE OR AT A LATER TIME. USE OF THIS DRAWING FOR REFERENCE OR EXAMPLE ON ANOTHER PROJECT REQUIRES THE SERVICES OF PROPERLY LICENSED ARCHITECTS AND ENGINEERS. REPRODUCTION OF THIS DRAWING FOR REUSE ON ANOTHER PROJECT IS NOT AUTHORIZED AND MAY BE CONTRARY TO THE LAW.

THE PRESERVE AT MOODY FARM

ROLESVILLE ROAD
WAKE COUNTY, NC

JOB NUMBER: 21-002
CHECKED BY: JK
DRAWN BY: RC & SM
DATE: 12/02/2024

SHEET TITLE:

PHASING PLAN

SHEET NO.:

C4.5

Z:\Jobs\21-002 Moody Development Trust (R21002D)\dwg_Working Dwgs\Construction Set\C4.0-4.6 Site Plan.dwg

December 2, 2024

GRAPHIC SCALE

100 0 50 100 200 400

(IN FEET)
1 inch =100

SITE INFORMATION	
TOTAL PROJECT ACREAGE	49.92 AC
GOVERNMENTAL USE	0.48 AC
AREA IN LOTS	24.38 AC
AREA IN ROW	6.54 AC
OPEN SPACE REQ.	10% / 5 AC.
OPEN SPACE PROVIDED	37% / 18.81 AC
ACTIVE REQUIRED	2.5 AC (50% OF 5 AC)
ACTIVE SHOWN	2.7 AC

SITE LEGEND	
	OPEN SPACE
	EXISTING WETLANDS
	GOVERNMENTAL USE
	ACTIVE OPEN SPACE
MK	MAIL KIOSK

CITY OF RALEIGH - PLANS AUTHORIZED FOR CONSTRUCTION

Electronic Approval: This approval is being issued electronically. This approval is valid only upon the signature of a City of Raleigh Review Officer below. The City will retain a copy of the approved plans. Any work authorized by this approval must proceed in accordance with the plans kept on file with the City. This electronic approval may not be edited once issued. Any modification to this approval once issued will invalidate this approval.

City of Raleigh Development Approval _____

Raleigh Water Review Officer

North Carolina 811 Inc.

*** 3 Days Before Digging ***
North Carolina 811
811 or 1-800-632-4949
Remote Ticket Entry
http://nc811.org/remoteticketentry.htm

AMERICAN Engineering
American Engineering Associates - Southeast, P.A.
4020 Westchase Boulevard, Suite 450
Raleigh, NC 27607
919-469-1101

NORTH CAROLINA PROFESSIONAL ENGINEER SEAL
AMERICAN ENGINEERING ASSOCIATES SOUTHEAST
C-3881
CERTIFICATE OF AUTHORIZATION

PRELIMINARY
DO NOT USE FOR CONSTRUCTION

Digitally signed by Jacob P. Kline
265-2000 Jacob P. Kline

NO.	DATE	REVISION:

STIPULATION FOR REUSE

THIS DRAWING WAS PREPARED FOR USE ON THE SPECIFIC SITE, NAMED HEREON, CONTEMPORANEOUSLY WITH ITS ISSUE DATE AS LISTED, HEREON, AND IT IS NOT SUITABLE FOR USE ON A DIFFERENT PROJECT SITE OR AT A LATER TIME. USE OF THIS DRAWING FOR REFERENCE OR EXAMPLE ON ANOTHER PROJECT REQUIRES THE SERVICES OF PROPERLY LICENSED ARCHITECTS AND ENGINEERS. REPRODUCTION OF THIS DRAWING FOR REUSE ON ANOTHER PROJECT IS NOT AUTHORIZED AND MAY BE CONTRARY TO THE LAW.

THE PRESERVE AT MOODY FARM

ROLESVILLE ROAD
WAKE COUNTY, NC

JOB NUMBER: 21-002
CHECKED BY: JK
DRAWN BY: RC & SM
DATE: 12/02/2024

SHEET TITLE:
OPEN SPACE AND LAND USE PLAN

SHEET NO.:
C4.6

Z:\Jobs\21-002 Moody Development Tract (8210002)\Eng_Working Dwgs\Construction Set\C4.0-4.6 Site Plan.dwg
December 2, 2024

#33- Slopes are not to exceed 3:1 without additional steps taken for stabilization. Slopes of 3:1 or less are preferred.

SITE LEGEND	
	OPEN SPACE
	EXISTING WETLANDS
MK	MAIL KIOSK
	LOT LINES
	SETBACK
	PROPOSED ROW
	PROPOSED EOP
	PROPOSED CENTERLINE
	PROPOSED BACK OF CURB
	50' NEUSE RIPARIAN BUFFER
	BUFFER ZONE 1 AND 2
	TOP OF CREEK
	PROPOSED SCM
	PROPOSED FENCE
	SIGHT TRIANGLE

GRAPHIC SCALE

100 0 50 100 200 400

(IN FEET)
1 inch =100

NOTE: SEE DRAINAGE 50 SCALE SHEETS FOR STORMWATER STRUCTURE LABELS.

CITY OF RALEIGH - PLANS AUTHORIZED FOR CONSTRUCTION

Electronic Approval: This approval is being issued electronically. This approval is valid only upon the signature of a City of Raleigh Review Officer below. The City will retain a copy of the approved plans. Any work authorized by this approval must proceed in accordance with the plans kept on file with the City. This electronic approval may not be edited once issued. Any modification to this approval once issued will invalidate this approval.

City of Raleigh Development Approval _____

Raleigh Water Review Officer

North Carolina 811 Before You Dig

*** 3 Days Before Digging ***
North Carolina 811
811 or 1-800-632-4949
Remote Ticket Entry
http://nc811.org/remoteticketentry.htm

AMERICAN Engineering
American Engineering Associates - Southeast, P.A.
4020 Westchase Boulevard, Suite 450
Raleigh, NC 27607
919-469-1101

NORTH CAROLINA AMERICAN ENGINEERING ASSOCIATES SOUTHEAST C-3881 CERTIFICATE OF AUTHORIZATION

PRELIMINARY

PRELIMINARY
DO NOT USE FOR CONSTRUCTION

NORTH CAROLINA PROFESSIONAL ENGINEER SEAL 045202 JACOB P. KLEIN

Digitally signed by Jacob Klein
DN: cn=Jacob Klein, o=American Engineering Associates Southeast, ou=Engineering, email=jklein@aeasoutheast.com, c=US
2025.03.31 12:47:00 -04'00'

FOR INFORMATION, ONLY

NO.	DATE	REVISION:

STIPULATION FOR REUSE

THIS DRAWING WAS PREPARED FOR USE ON THE SPECIFIC SITE, NAMED HEREON, CONTEMPORANEOUSLY WITH ITS ISSUE DATE AS LISTED, HEREON, AND IT IS NOT SUITABLE FOR USE ON A DIFFERENT PROJECT SITE OR AT A LATER TIME. USE OF THIS DRAWING FOR REFERENCE OR EXAMPLE ON ANOTHER PROJECT REQUIRES THE SERVICES OF PROPERLY LICENSED ARCHITECTS AND ENGINEERS. REPRODUCTION OF THIS DRAWING FOR REUSE ON ANOTHER PROJECT IS NOT AUTHORIZED AND MAY BE CONTRARY TO THE LAW.

THE PRESERVE AT MOODY FARM

ROLESVILLE ROAD
WAKE COUNTY, NC

JOB NUMBER: 21-002
CHECKED BY: JK
DRAWN BY: RC & SM
DATE: 12/02/2024

SHEET TITLE:
OVERALL DRAINAGE PLAN

SHEET NO.:
C5.0

Z:\Jobs\21-002 Moody Development Trust (R21002D)\Dwgs_Working Dwgs\Construction Set\C-5-5-1-Drainage and Grading Plan.dwg December 2, 2024

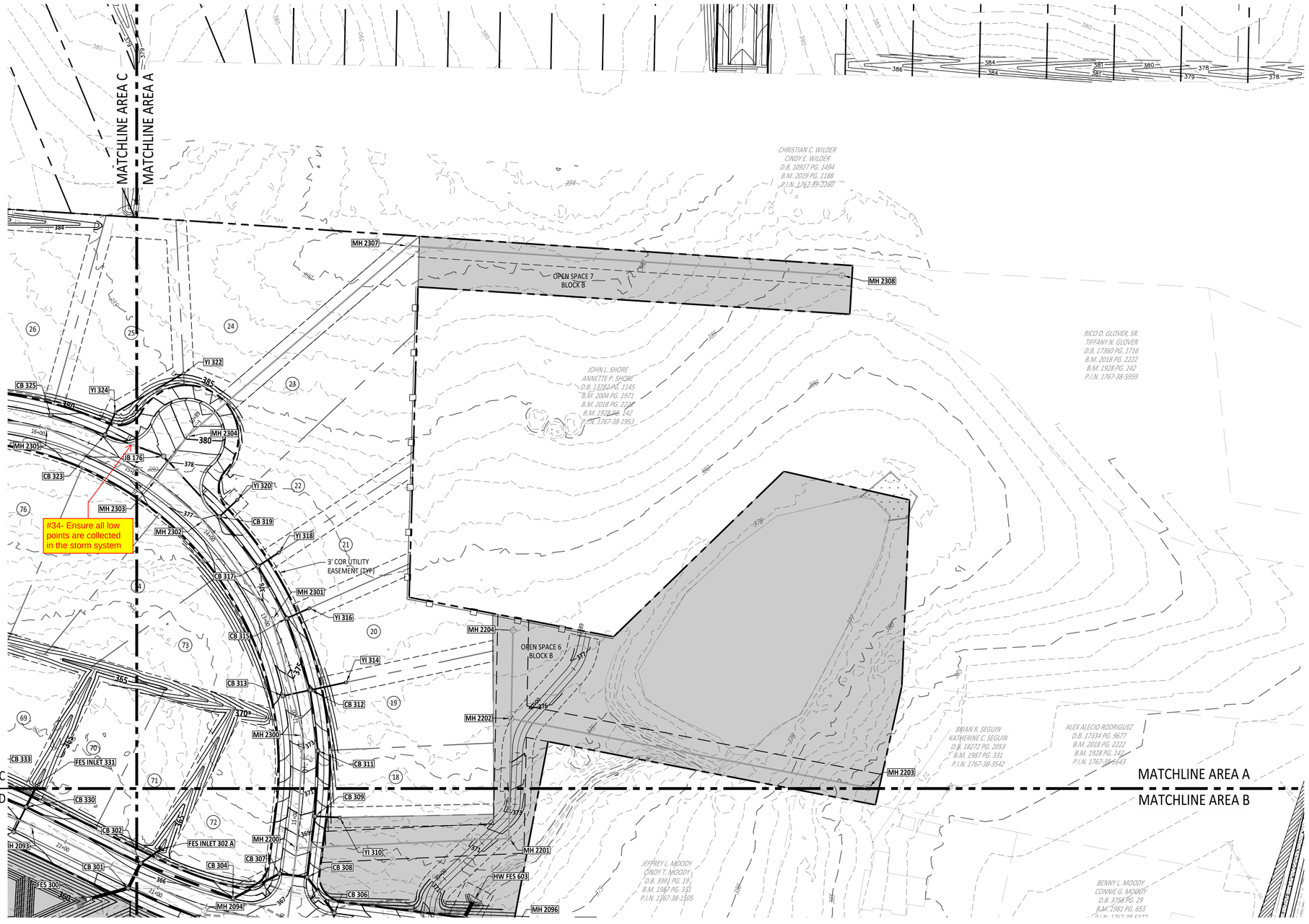

SITE LEGEND	
	OPEN SPACE
	EXISTING WETLANDS
MK	MAIL KIOSK
	LOT LINES
	SETBACK
	PROPOSED ROW
	PROPOSED EOP
	PROPOSED CENTERLINE
	PROPOSED BACK OF CURB
	50' NEUSE RIPARIAN BUFFER
	BUFFER ZONE 1 AND 2
	TOP OF CREEK
	PROPOSED SCM
	PROPOSED FENCE
	SIGHT TRIANGLE

GRAPHIC SCALE

50 0 25 50 100 200

(IN FEET)
1 inch = 50

CITY OF RALEIGH - PLANS AUTHORIZED FOR CONSTRUCTION

Electronic Approval: This approval is being issued electronically. This approval is valid only upon the signature of a City of Raleigh Review Officer below. The City will retain a copy of the approved plans. Any work authorized by this approval must proceed in accordance with the plans kept on file with the City. This electronic approval may not be edited once issued. Any modification to this approval once issued will invalidate this approval.

City of Raleigh Development Approval _____

Raleigh Water Review Officer

North Carolina 811 we dig

*** 3 Days Before Digging ***
North Carolina 811
811 or 1-800-632-4949
Remote Ticket Entry
http://nc811.org/remoteticketentry.htm

AMERICAN Engineering
American Engineering Associates - Southeast, P.A.
4020 Westchase Boulevard, Suite 450
Raleigh, NC 27607
919-469-1101

NORTH CAROLINA
AMERICAN ENGINEERING ASSOCIATES SOUTHEAST
C-3881
CERTIFICATE OF AUTHORIZATION

PRELIMINARY

PRELIMINARY
DO NOT USE FOR CONSTRUCTION

Digitally signed by Jacob P. Klein
DN: c=US, o=American Engineering Associates Southeast, cn=Jacob P. Klein, email=jklein@aeasoutheast.com
Date: 2025.12.02 15:12:32 -05'00'

FOR INFORMATION, ONLY

NO.	DATE	REVISION:

STIPULATION FOR REUSE

THIS DRAWING WAS PREPARED FOR USE ON THE SPECIFIC SITE, NAMED HEREON, CONTEMPORANEOUSLY WITH ITS ISSUE DATE AS LISTED, HEREON, AND IT IS NOT SUITABLE FOR USE ON A DIFFERENT PROJECT SITE OR AT A LATER TIME. USE OF THIS DRAWING FOR REFERENCE OR EXAMPLE ON ANOTHER PROJECT REQUIRES THE SERVICES OF PROPERLY LICENSED ARCHITECTS AND ENGINEERS. REPRODUCTION OF THIS DRAWING FOR REUSE ON ANOTHER PROJECT IS NOT AUTHORIZED AND MAY BE CONTRARY TO THE LAW.

THE PRESERVE AT MOODY FARM

ROLESVILLE ROAD
WAKE COUNTY, NC

JOB NUMBER: 21-002
CHECKED BY: JK
DRAWN BY: RC & SM
DATE: 12/02/2024

SHEET TITLE:

DRAINAGE PLAN A

SHEET NO.:

C5.1

Z:\Jobs\21-002 Moody Development Tract (R21000010ea)_Working Dwgs\Construction Set\C5-5-1-Drainage and Grading Plan.dwg December 2, 2024

GRAPHIC SCALE

50 0 25 50 100 200

(IN FEET)
1 inch = 50

SITE LEGEND
OPEN SPACE
EXISTING WETLANDS
MAIL KIOSK
LOT LINES
SETBACK
PROPOSED ROW
PROPOSED EOP
PROPOSED CENTERLINE
PROPOSED BACK OF CURB
50' NEUSE RIPARIAN BUFFER
BUFFER ZONE 1 AND 2
TOP OF CREEK
PROPOSED SCM
PROPOSED FENCE
SIGHT TRIANGLE

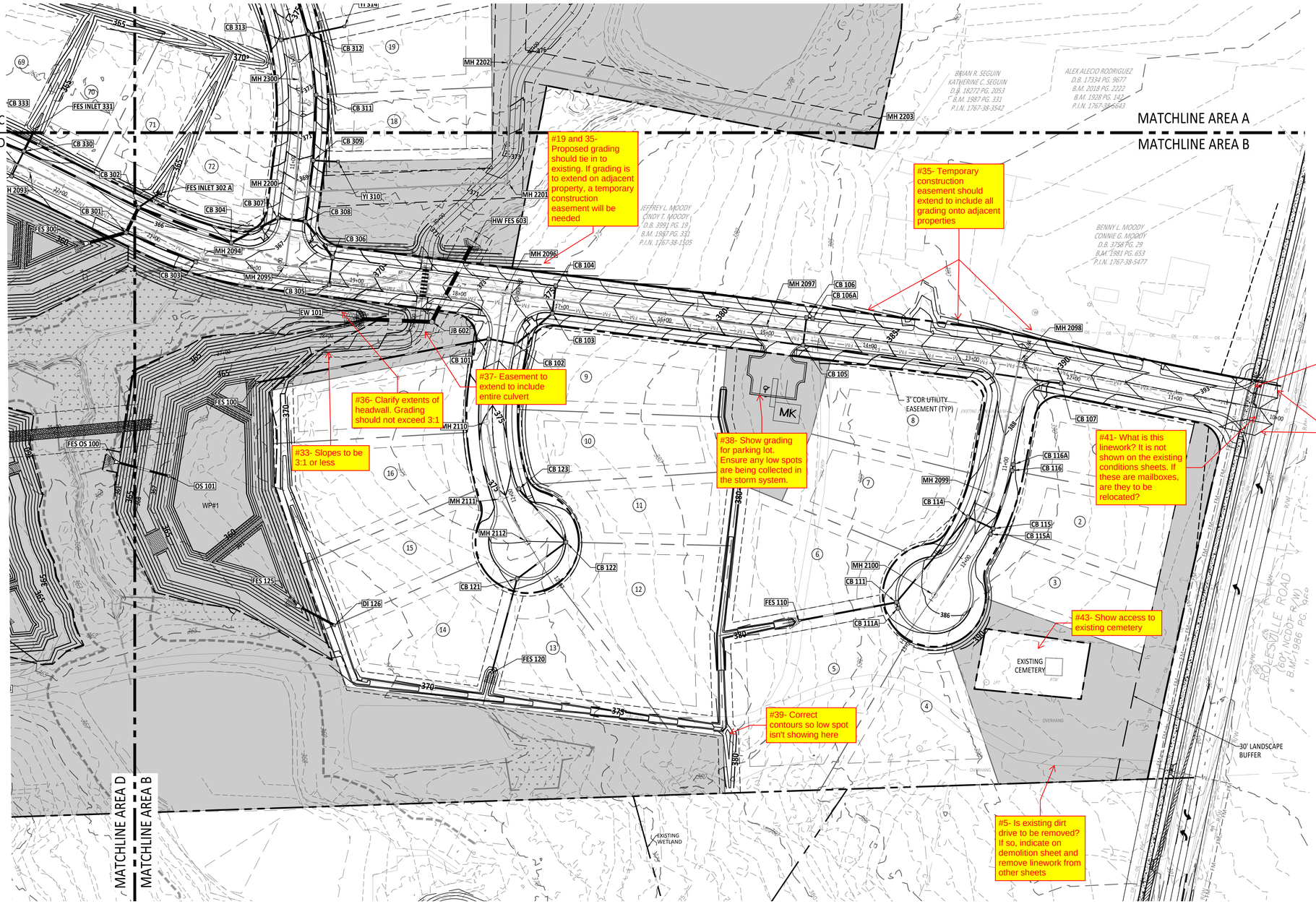

AMERICAN Engineering
American Engineering Associates - Southeast, P.A.
4020 Westchase Boulevard, Suite 450
Raleigh, NC 27607
919-469-1101

NORTH CAROLINA AMERICAN ENGINEERING ASSOCIATES SOUTHEAST C-3881 CERTIFICATE OF AUTHORIZATION

PRELIMINARY

PRELIMINARY
DO NOT USE FOR CONSTRUCTION

Digitally signed by Jacob P. Kline
DN: cn=Jacob P. Kline, o=AMERICAN ENGINEERING ASSOCIATES SOUTHEAST, ou=Engineering, email=jkline@aeasoutheast.com, c=US
Date: 2025.01.07 15:24:32 -05'00'

FOR INFORMATION, ONLY

NO.	DATE	REVISION:

STIPULATION FOR REUSE

THIS DRAWING WAS PREPARED FOR USE ON THE SPECIFIC SITE, NAMED HEREON, CONTEMPORANEOUSLY WITH ITS ISSUE DATE AS LISTED, HEREON, AND IT IS NOT SUITABLE FOR USE ON A DIFFERENT PROJECT SITE OR AT A LATER TIME. USE OF THIS DRAWING FOR REFERENCE OR EXAMPLE ON ANOTHER PROJECT REQUIRES THE SERVICES OF PROPERLY LICENSED ARCHITECTS AND ENGINEERS. REPRODUCTION OF THIS DRAWING FOR REUSE ON ANOTHER PROJECT IS NOT AUTHORIZED AND MAY BE CONTRARY TO THE LAW.

THE PRESERVE AT MOODY FARM

ROLESVILLE ROAD
WAKE COUNTY, NC

JOB NUMBER: 21-002
CHECKED BY: JK
DRAWN BY: RC & SM
DATE: 12/02/2024

SHEET TITLE:

DRAINAGE PLAN B

SHEET NO.:

C5.2

CITY OF RALEIGH - PLANS AUTHORIZED FOR CONSTRUCTION

Electronic Approval: This approval is being issued electronically. This approval is valid only upon the signature of a City of Raleigh Review Officer below. The City will retain a copy of the approved plans. Any work authorized by this approval must proceed in accordance with the plans kept on file with the City. This electronic approval may not be edited once issued. Any modification to this approval once issued will invalidate this approval.

City of Raleigh Development Approval _____

Raleigh Water Review Officer

North Carolina 811 Call Before You Dig

*** 3 Days Before Digging ***
North Carolina 811
811 or 1-800-632-4949
Remote Ticket Entry
http://nc811.org/remoteticketentry.htm

Z:\Jobs\21-002 Moody Development Tract (R21000010)\dwg_Working Dwgs\Construction Set\C5-5-3 Drainage and Grading Plan.dwg December 2, 2024

GRAPHIC SCALE

50 0 25 50 100 200

(IN FEET)
1 inch = 50

SITE LEGEND	
	OPEN SPACE
	EXISTING WETLANDS
MK	MAIL KIOSK
	LOT LINES
	SETBACK
	PROPOSED ROW
	PROPOSED EOP
	PROPOSED CENTERLINE
	PROPOSED BACK OF CURB
	50' NEUSE RIPARIAN BUFFER
	BUFFER ZONE 1 AND 2
	TOP OF CREEK
	PROPOSED SCM
	PROPOSED FENCE
	SIGHT TRIANGLE

CITY OF RALEIGH - PLANS AUTHORIZED FOR CONSTRUCTION

Electronic Approval: This approval is being issued electronically. This approval is valid only upon the signature of a City of Raleigh Review Officer below. The City will retain a copy of the approved plans. Any work authorized by this approval must proceed in accordance with the plans kept on file with the City. This electronic approval may not be edited once issued. Any modification to this approval once issued will invalidate this approval.

City of Raleigh Development Approval _____

Raleigh Water Review Officer

North Carolina 811

*** 3 Days Before Digging ***
North Carolina 811
811 or 1-800-632-4949
Remote Ticket Entry
http://nc811.org/remoteticketentry.htm

AMERICAN Engineering
American Engineering Associates - Southeast, P.A.
4020 Westchase Boulevard, Suite 450
Raleigh, NC 27607
919-469-1101

NORTH CAROLINA ENGINEERING CERTIFICATE OF AUTHORIZATION
AMERICAN ENGINEERING ASSOCIATES SOUTHEAST
C-3881

PRELIMINARY

PRELIMINARY
DO NOT USE FOR CONSTRUCTION
Digitally signed by JACOB P. KLEIN
265260 NORTH CAROLINA ENGINEER
FOR INFORMATION ONLY

NO.	DATE	REVISION:

STIPULATION FOR REUSE

THIS DRAWING WAS PREPARED FOR USE ON THE SPECIFIC SITE, NAMED HEREON, CONTEMPORANEOUSLY WITH ITS ISSUE DATE AS LISTED, HEREON, AND IT IS NOT SUITABLE FOR USE ON A DIFFERENT PROJECT SITE OR AT A LATER TIME. USE OF THIS DRAWING FOR REFERENCE OR EXAMPLE ON ANOTHER PROJECT REQUIRES THE SERVICES OF PROPERLY LICENSED ARCHITECTS AND ENGINEERS. REPRODUCTION OF THIS DRAWING FOR REUSE ON ANOTHER PROJECT IS NOT AUTHORIZED AND MAY BE CONTRARY TO THE LAW.

THE PRESERVE AT MOODY FARM

ROLESVILLE ROAD
WAKE COUNTY, NC

JOB NUMBER: 21-002
CHECKED BY: JK
DRAWN BY: RC & SM
DATE: 12/02/2024

SHEET TITLE:

DRAINAGE PLAN C

SHEET NO.:

C5.3

Z:\Job\21-002 Moody Development Tract (R21000701)\dwg_Working Dwgs\Construction Set\C5.0-5.3 Drainage and Grading Plan.dwg December 2, 2024

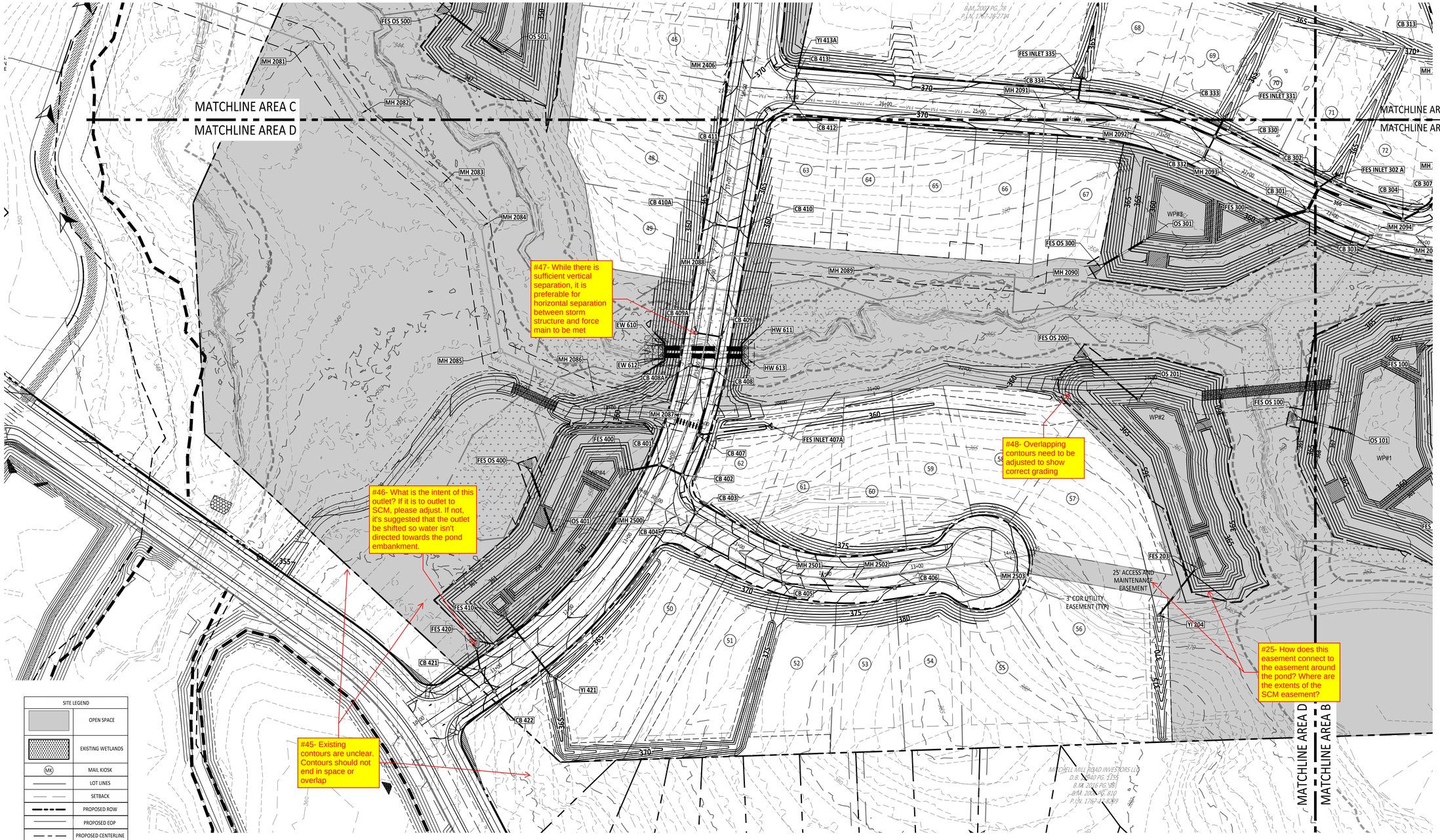

CITY OF RALEIGH - PLANS AUTHORIZED FOR CONSTRUCTION

Electronic Approval: This approval is being issued electronically. This approval is valid only upon the signature of a City of Raleigh Review Officer below. The City will retain a copy of the approved plans. Any work authorized by this approval must proceed in accordance with the plans kept on file with the City. This electronic approval may not be edited once issued. Any modification to this approval once issued will invalidate this approval.

City of Raleigh Development Approval _____

Raleigh Water Review Officer

North Carolina 811

*** 3 Days Before Digging ***
North Carolina 811
811 or 1-800-632-4949
Remote Ticket Entry
http://nc811.org/remoteticketentry.htm

AMERICAN Engineering
American Engineering Associates - Southeast, P.A.
4020 Westchase Boulevard, Suite 450
Raleigh, NC 27607
919-469-1101

NORTH CAROLINA AMERICAN ENGINEERING ASSOCIATES SOUTHEAST C-3881 CERTIFICATE OF AUTHORIZATION

PRELIMINARY

PRELIMINARY
DO NOT USE FOR CONSTRUCTION

NORTH CAROLINA PROFESSIONAL ENGINEER SEAL 045268 JACOB P. KLEIN

Digitally signed by Jacob Klein
DN: cn=Jacob Klein, o=AMERICAN ENGINEERING ASSOCIATES SOUTHEAST, ou=Engineering, email=jklein@aeasoutheast.com, c=US
2025.03.03 09:24:32 -05'00'

FOR INFORMATION, ONLY

NO.	DATE	REVISION:

STIPULATION FOR REUSE

THIS DRAWING WAS PREPARED FOR USE ON THE SPECIFIC SITE, NAMED HEREON, CONTEMPORANEOUSLY WITH ITS ISSUE DATE AS LISTED, HEREON, AND IT IS NOT SUITABLE FOR USE ON A DIFFERENT PROJECT, SITE, OR AT A LATER TIME. USE OF THIS DRAWING FOR REFERENCE OR EXAMPLE ON ANOTHER PROJECT REQUIRES THE SERVICES OF PROPERLY LICENSED ARCHITECTS AND ENGINEERS. REPRODUCTION OF THIS DRAWING FOR REUSE ON ANOTHER PROJECT IS NOT AUTHORIZED AND MAY BE CONTRARY TO THE LAW.

THE PRESERVE AT MOODY FARM

ROLESVILLE ROAD
WAKE COUNTY, NC

JOB NUMBER: 21-002
CHECKED BY: JK
DRAWN BY: RC & SM
DATE: 12/02/2024

SHEET TITLE:

DRAINAGE PLAN D

SHEET NO.:

C5.4

Z:\Jobs\21-002 Moody Development Trust (R21002)\dwg_Working Dwgs\Construction Sets\C5-5-3 Drainage and Grading Plan.dwg December 2, 2024

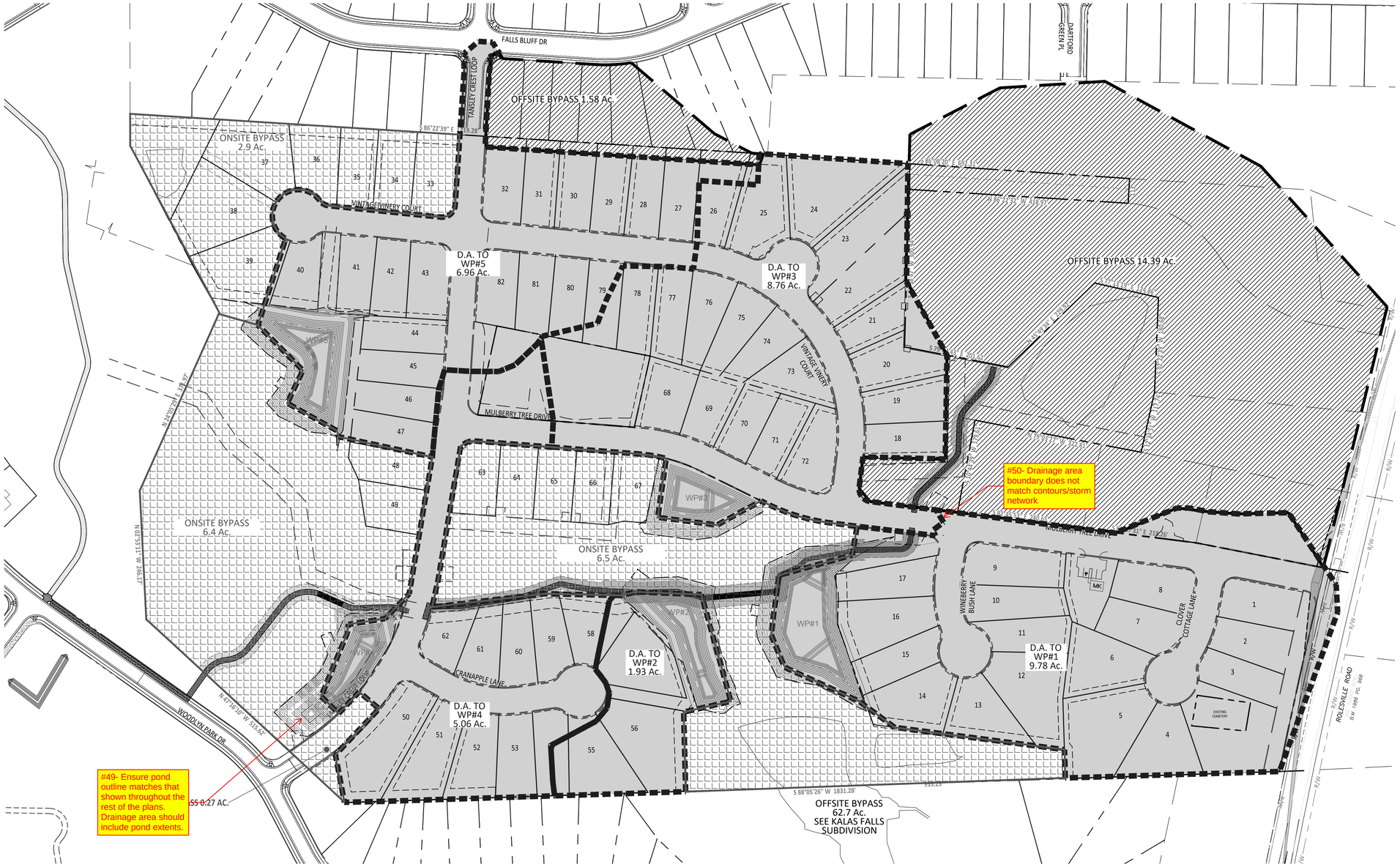

LEGEND	
	SCM DRAINAGE AREA
	OFFSITE BYPASS
	ONSITE BYPASS

GRAPHIC SCALE

100 0 50 100 200 400

(IN FEET)
1 inch =100

TOR # PR 22-01

North Carolina 811

*** 3 Days Before Digging ***
North Carolina 811
811 or 1-800-632-4949
Remote Ticket Entry
http://nc811.org/remoteticketentry.htm

AMERICAN Engineering
American Engineering Associates - Southeast, P.A.
4020 Westchase Boulevard, Suite 450
Raleigh, NC 27607
919-469-1101

NORTH CAROLINA AMERICAN ENGINEERING ASSOCIATES SOUTHEAST C-3881 CERTIFICATE OF AUTHORIZATION

PRELIMINARY

PRELIMINARY DO NOT USE FOR CONSTRUCTION

NORTH CAROLINA PROFESSIONAL ENGINEER SEAL 045180 JACOB P. KLEIN

Digitally signed by Jacob P. Klein
DN: cn=Jacob P. Klein, o=American Engineering Associates Southeast, ou=Engineering, c=US
Date: 2024.12.02 15:28:00 -05'00'

FOR INFORMATION, ONLY

NO.	DATE	REVISION

STIPULATION FOR REUSE

THIS DRAWING WAS PREPARED FOR USE ON THE SPECIFIC SITE, NAMED HEREON, CONTEMPORANEOUSLY WITH ITS ISSUE DATE AS LISTED, HEREON, AND IT IS NOT SUITABLE FOR USE ON A DIFFERENT PROJECT SITE OR AT A LATER TIME. USE OF THIS DRAWING FOR REFERENCE OR EXAMPLE ON ANOTHER PROJECT REQUIRES THE SERVICES OF PROPERLY LICENSED ARCHITECTS AND ENGINEERS. REPRODUCTION OF THIS DRAWING FOR REUSE ON ANOTHER PROJECT IS NOT AUTHORIZED AND MAY BE CONTRARY TO THE LAW.

THE PRESERVE AT MOODY FARM

ROLESVILLE ROAD
WAKE COUNTY, NC

JOB NUMBER:	21-002
CHECKED BY:	JRH
DRAWN BY:	EDS
DATE:	12-02-2024

SHEET TITLE:

POST DRAINAGE AREA SCM MAP

SHEET NO.:

5.5

Z:\Jobs\21-002 Moody Development Tract (R21000)\Dwgs_Working Dwgs\Construction Set\5.5-Post DA Map.dwg

December 2, 2024

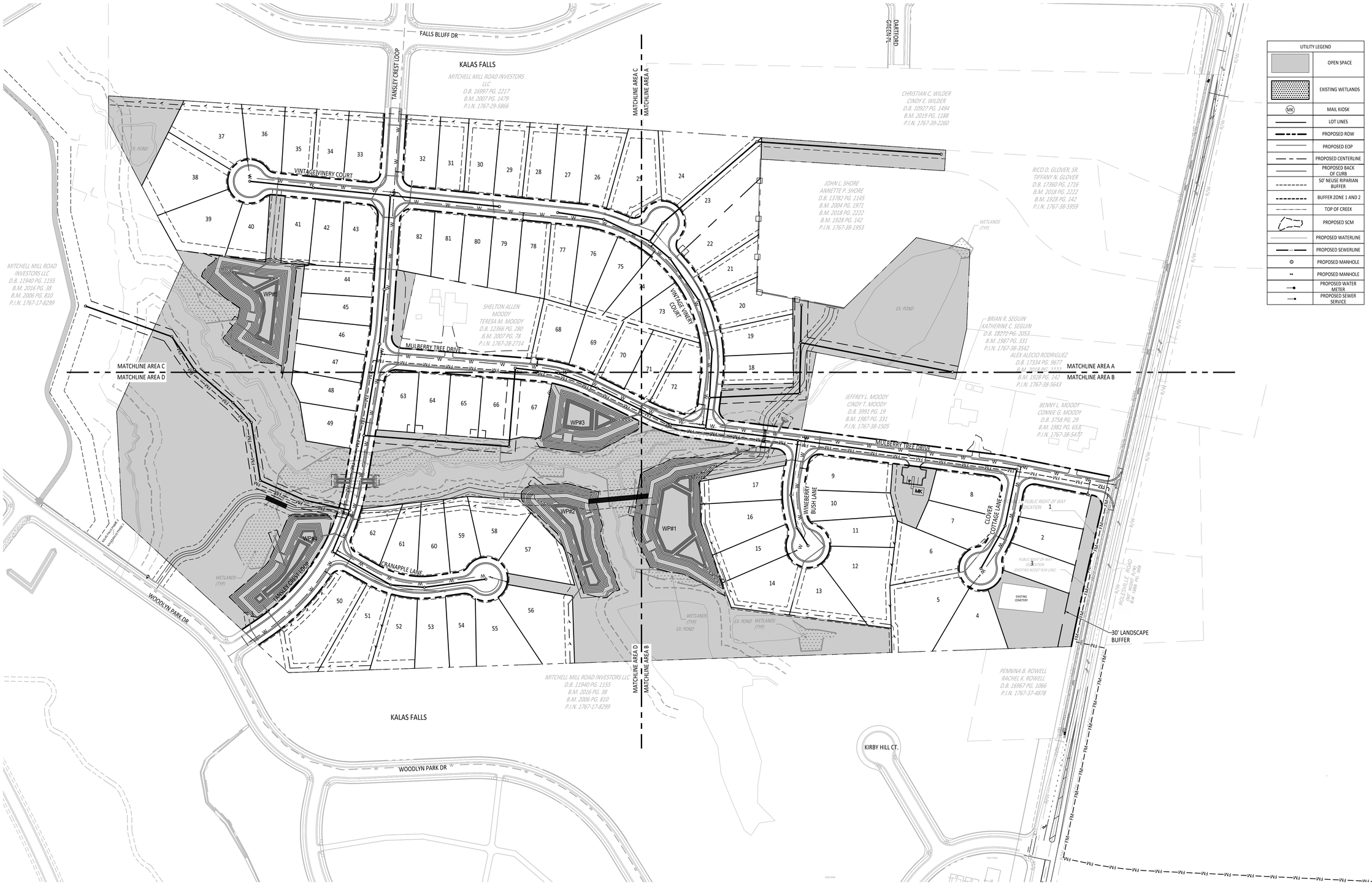

UTILITY LEGEND	
	OPEN SPACE
	EXISTING WETLANDS
MK	MAIL KIOSK
	LOT LINES
	PROPOSED ROW
	PROPOSED EOP
	PROPOSED CENTERLINE
	PROPOSED BACK OF CURB
	50' NEUSE RIPARIAN BUFFER
	BUFFER ZONE 1 AND 2
	TOP OF CREEK
	PROPOSED SCM
	PROPOSED WATERLINE
	PROPOSED SEWERLINE
	PROPOSED MANHOLE
	PROPOSED MANHOLE
	PROPOSED WATER METER
	PROPOSED SEWER SERVICE

NOTE: SEE UTILITY 50 SCALE SHEETS FOR EASEMENT AND APPURTENANCE LABELS.

GRAPHIC SCALE

100 0 50 100 200 400

(IN FEET)
1 inch =100

*WE'RE ANTICIPATING CONSTRUCTION OF FM TO BE DONE PRIOR TO CONSTRUCTION OF THIS PROJECT.

CITY OF RALEIGH - PLANS AUTHORIZED FOR CONSTRUCTION

Electronic Approval: This approval is being issued electronically. This approval is valid only upon the signature of a City of Raleigh Review Officer below. The City will retain a copy of the approved plans. Any work authorized by this approval must proceed in accordance with the plans kept on file with the City. This electronic approval may not be edited once issued. Any modification to this approval once issued will invalidate this approval.

City of Raleigh Development Approval _____

Raleigh Water Review Officer

North Carolina 811 — 1-800-632-4949

*** 3 Days Before Digging ***
North Carolina 811
811 or 1-800-632-4949
Remote Ticket Entry
http://nc811.org/remoteticketentry.htm

AMERICAN Engineering
American Engineering Associates - Southeast, P.A.
4020 Westchase Boulevard, Suite 450
Raleigh, NC 27607
919-469-1101

NORTH CAROLINA PROFESSIONAL ENGINEER SEAL — AMERICAN ENGINEERING ASSOCIATES SOUTHEAST C-3881 — CERTIFICATE OF AUTHORIZATION — JACOB P. KLEIN

PRELIMINARY

PRELIMINARY
DO NOT USE FOR CONSTRUCTION

Digitally signed by Jacob Klein
DN: c=US, st=North Carolina, l=Raleigh, o=American Engineering Associates Southeast, cn=Jacob Klein, email=jklein@aeasoutheast.com
2025.03.31 15:12:52 -04'00'

FOR INFORMATION, ONLY

NO.	DATE	REVISION:

STIPULATION FOR REUSE

THIS DRAWING WAS PREPARED FOR USE ON THE SPECIFIC SITE, NAMED HEREON, CONTEMPORANEOUSLY WITH ITS ISSUE DATE AS LISTED, HEREON, AND IT IS NOT SUITABLE FOR USE ON A DIFFERENT PROJECT SITE OR AT A LATER TIME. USE OF THIS DRAWING FOR REFERENCE OR EXAMPLE ON ANOTHER PROJECT REQUIRES THE SERVICES OF PROPERLY LICENSED ARCHITECTS AND ENGINEERS. REPRODUCTION OF THIS DRAWING FOR REUSE ON ANOTHER PROJECT IS NOT AUTHORIZED AND MAY BE CONTRARY TO THE LAW.

THE PRESERVE AT MOODY FARM

ROLESVILLE ROAD
WAKE COUNTY, NC

JOB NUMBER: 21-002
CHECKED BY: JK
DRAWN BY: RC & SM
DATE: 12/02/2024

SHEET TITLE:
OVERALL UTILITIES PLAN

SHEET NO.:
C6.0

Z:\Jobs\21-002 Moody Development Tract (R21000075Final)_Working Dwgs\Construction Set\C6.0-Utilities Plan.dwg
December 2, 2024

GRAPHIC SCALE

50 0 25 50 100 200

(IN FEET)
1 inch = 50

MATCHLINE AREA C
MATCHLINE AREA A

20' DRAINAGE EASEMENT
20' DRAINAGE EASEMENT
20' DRAINAGE EASEMENT
20' DRAINAGE EASEMENT
20' COR UTILITY EASEMENT
VARIABLE WIDTH DRAINAGE EASEMENT

MH 2307
MH 2308
OPEN SPACE 7
BLOCK B

CB 325
YI 324
CB 323
YI 322
MH 2304
JB 176
MH 2305
MH 2303
8"x 4" TEE WITH
2-8" GATE VALVE
AND 4" GATE VALVE
4" BOA
4" G.V.
8" DIP WATERLINE
YI 3
CB 319
MH 2302
YI 318
CB 317
CB 315
MH 2301
YI 316
YI 314
CB 313
CB 312
MH 2300
CB 311
CB 309
YI 310
MH 2200
CB 308
CB 306
CB 307
CB 304
CB 302
CB 301
CB 330
FES INLET 331
FES INLET 302 A
FES 300
SEWR FM
BY OTHERS
8" DIP WATERLINE
MH 2204
OPEN SPACE 6
BLOCK B
VARIABLE WIDTH
GREENWAY EASEMENT
30' COR UTILITY EASEMENT
MH 2202
MH 2201
MH 2203
HW FES 603
8"x 6" TEE WITH
2-8" GATE VALVE
EX. POND

#51- Consider placement for these services and how they will be actually installed. Confirm there is enough room in the structure and between the services/fittings for installation

CHRISTIAN C. WILDER
CINDY E. WILDER
D.B. 10927 PG. 1494
B.M. 2019 PG. 1188
P.I.N. 1767-39-2260

JOHN L. SHORE
ANNETTE P. SHORE
D.B. 13782 PG. 1145
B.M. 2004 PG. 1971
B.M. 2018 PG. 2222
B.M. 1928 PG. 142
P.I.N. 1767-38-1953

RICO D. GLOVER, SR.
TIFFANY N. GLOVER
D.B. 17360 PG. 1716
B.M. 2018 PG. 2222
B.M. 1928 PG. 142
P.I.N. 1767-38-9959

WETLANDS (TYP)

BRIAN R. SEGUIN
KATHERINE C. SEGUIN
D.B. 18272 PG. 2053
B.M. 1987 PG. 331
P.I.N. 1767-38-3542

ALEX ALECIO RODRIGUEZ
D.B. 17334 PG. 9677
B.M. 2018 PG. 2222
B.M. 1928 PG. 142
P.I.N. 1767-38-5643

JEFFREY L. MOODY
CINDY T. MOODY
D.B. 3991 PG. 19
B.M. 1987 PG. 331
P.I.N. 1767-38-1505

BENNY L. MOODY
CONNIE G. MOODY
D.B. 3758 PG. 29
B.M. 1981 PG. 653

MATCHLINE AREA C
MATCHLINE AREA D
MATCHLINE AREA A
MATCHLINE AREA B

SEE NOTE THIS SHEET
SEE NOTE THIS SHEET
SEE NOTE THIS SHEET

UTILITY LEGEND	
	OPEN SPACE
	EXISTING WETLANDS
MK	MAIL KIOSK
	LOT LINES
	PROPOSED ROW
	PROPOSED EOP
	PROPOSED CENTERLINE
	PROPOSED BACK OF CURB
	50' NEUSE RIPARIAN BUFFER
	BUFFER ZONE 1 AND 2
	TOP OF CREEK
	PROPOSED SCM
	PROPOSED WATERLINE
	PROPOSED SEWERLINE
	PROPOSED MANHOLE
	PROPOSED MANHOLE
	PROPOSED WATER METER
	PROPOSED SEWER SERVICE

CITY OF RALEIGH - PLANS AUTHORIZED FOR CONSTRUCTION

Electronic Approval: This approval is being issued electronically. This approval is valid only upon the signature of a City of Raleigh Review Officer below. The City will retain a copy of the approved plans. Any work authorized by this approval must proceed in accordance with the plans kept on file with the City. This electronic approval may not be edited once issued. Any modification to this approval once issued will invalidate this approval.

City of Raleigh Development Approval _____

Raleigh Water Review Officer

North Carolina 811 Call Before You Dig

*** 3 Days Before Digging ***
North Carolina 811
811 or 1-800-632-4949
Remote Ticket Entry
http://nc811.org/remoteticketentry.htm

AMERICAN Engineering
American Engineering Associates - Southeast, P.A.
4020 Westchase Boulevard, Suite 450
Raleigh, NC 27607
919-469-1101

NORTH CAROLINA AMERICAN ENGINEERING ASSOCIATES SOUTHEAST C-3881 CERTIFICATE OF AUTHORIZATION

PRELIMINARY

PRELIMINARY
DO NOT USE FOR CONSTRUCTION

Digitally signed by JACOB P. KLEIN
2024.12.02 12:24:32 -05'00'

FOR INFORMATION, ONLY

NO.	DATE	REVISION:

STIPULATION FOR REUSE

THIS DRAWING WAS PREPARED FOR USE ON THE SPECIFIC SITE, NAMED HEREON, CONTEMPORANEOUSLY WITH ITS ISSUE DATE AS LISTED, HEREON, AND IT IS NOT SUITABLE FOR USE ON A DIFFERENT PROJECT SITE OR AT A LATER TIME. USE OF THIS DRAWING FOR REFERENCE OR EXAMPLE ON ANOTHER PROJECT REQUIRES THE SERVICES OF PROPERLY LICENSED ARCHITECTS AND ENGINEERS. REPRODUCTION OF THIS DRAWING FOR REUSE ON ANOTHER PROJECT IS NOT AUTHORIZED AND MAY BE CONTRARY TO THE LAW.

THE PRESERVE AT MOODY FARM

ROLESVILLE ROAD
WAKE COUNTY, NC

JOB NUMBER: 21-002
CHECKED BY: JK
DRAWN BY: RC & SM
DATE: 12/02/2024

SHEET TITLE:

UTILITY PLAN A

SHEET NO.:

C6.1

Z:\Jobs\21-002 Moody Development Tract (R21000010\Dwg_Working Dwgs\Construction Set\C6.0-Utilities Plan.dwg

December 2, 2024

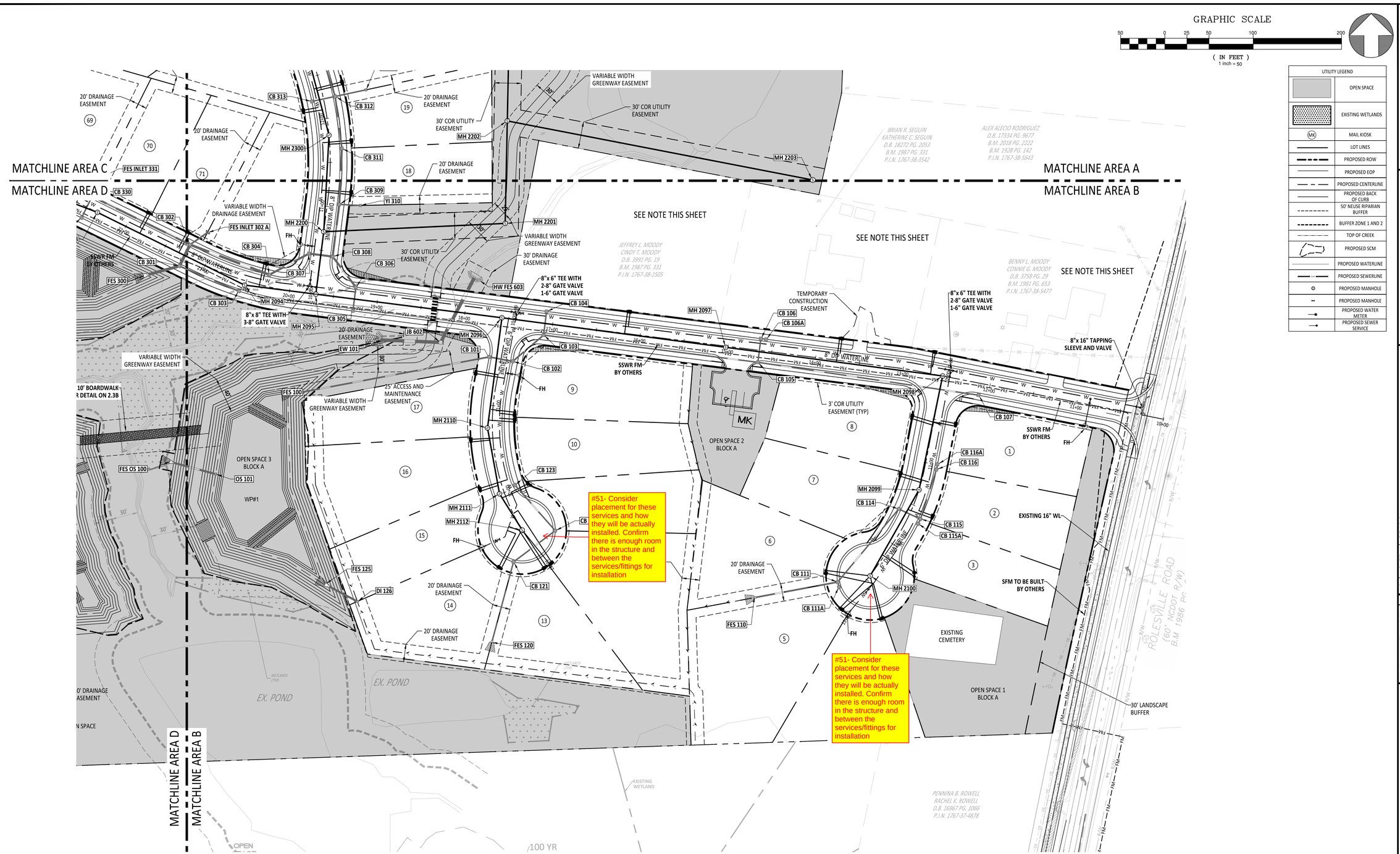

UTILITY LEGEND	
	OPEN SPACE
	EXISTING WETLANDS
MK	MAIL KIOSK
	LOT LINES
	PROPOSED ROW
	PROPOSED EOP
	PROPOSED CENTERLINE
	PROPOSED BACK OF CURB
	50' NEUSE RIPARIAN BUFFER
	BUFFER ZONE 1 AND 2
	TOP OF CREEK
	PROPOSED SCM
	PROPOSED WATERLINE
	PROPOSED SEWERLINE
	PROPOSED MANHOLE
	PROPOSED MANHOLE
	PROPOSED WATER METER
	PROPOSED SEWER SERVICE

NOTE:
1. UTILITY SERVICES OF EXISTING PROPERTIES SHALL BE CONFIRMED PRIOR TO CONSTRUCTION TO ENSURE PROPOSED DEVELOPMENT IS NOT IN CONFLICT. CONTACT AMERICAN ENGINEERING IF THERE ARE ANY DISCREPENCIES.

CITY OF RALEIGH - PLANS AUTHORIZED FOR CONSTRUCTION

Electronic Approval: This approval is being issued electronically. This approval is valid only upon the signature of a City of Raleigh Review Officer below. The City will retain a copy of the approved plans. Any work authorized by this approval must proceed in accordance with the plans kept on file with the City. This electronic approval may not be edited once issued. Any modification to this approval once issued will invalidate this approval.

City of Raleigh Development Approval _____

Raleigh Water Review Officer

North Carolina 811 We Dig It

*** 3 Days Before Digging ***
North Carolina 811
811 or 1-800-632-4949
Remote Ticket Entry
http://nc811.org/remoteticketentry.htm

AMERICAN Engineering
American Engineering Associates - Southeast, P.A.
4020 Westchase Boulevard, Suite 450
Raleigh, NC 27607
919-469-1101

NORTH CAROLINA AMERICAN ENGINEERING ASSOCIATES SOUTHEAST C-3881 CERTIFICATE OF AUTHORIZATION

PRELIMINARY

PRELIMINARY
DO NOT USE FOR CONSTRUCTION

Digitally signed by JACOB P. KLEIN
DN: cn=JACOB P. KLEIN, c=US, o=AMERICAN ENGINEERING ASSOCIATES SOUTHEAST, ou=ENGINEERING, email=jklein@aesnc.com
2025.03.07 15:09:32 -05'00'

FOR INFORMATION ONLY

NO.	DATE	REVISION:

STIPULATION FOR REUSE

THIS DRAWING WAS PREPARED FOR USE ON THE SPECIFIC SITE, NAMED HEREON, CONTEMPORANEOUSLY WITH ITS ISSUE DATE AS LISTED, HEREON. AND IT IS NOT SUITABLE FOR USE ON A DIFFERENT PROJECT SITE OR AT A LATER TIME. USE OF THIS DRAWING FOR REFERENCE OR EXAMPLE ON ANOTHER PROJECT REQUIRES THE SERVICES OF PROPERLY LICENSED ARCHITECTS AND ENGINEERS. REPRODUCTION OF THIS DRAWING FOR REUSE ON ANOTHER PROJECT IS NOT AUTHORIZED AND MAY BE CONTRARY TO THE LAW.

THE PRESERVE AT MOODY FARM
ROLESVILLE ROAD
WAKE COUNTY, NC

JOB NUMBER: 21-002
CHECKED BY: JK
DRAWN BY: RC & SM
DATE: 12/02/2024

SHEET TITLE:

UTILITY PLAN B

SHEET NO.:

C6.2

December 2, 2024

Z:\Jobs\21-002 Moody Development Tract (R21000010)\Dwg_Working Dwgs\Construction Set\6.0-Utilities Plan.dwg

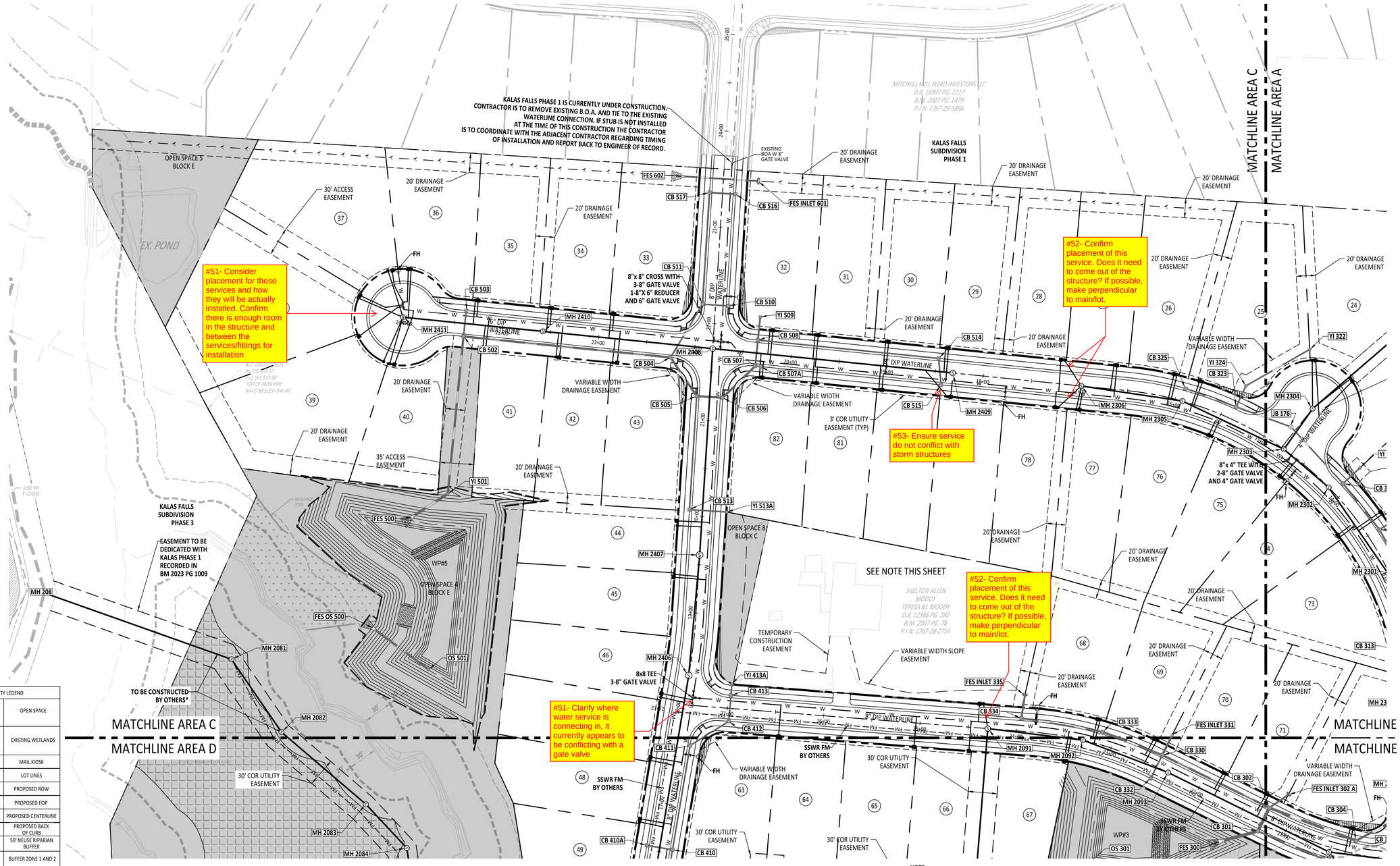

UTILITY LEGEND	
	OPEN SPACE
	EXISTING WETLANDS
MK	MAIL KIOSK
	LOT LINES
	PROPOSED ROW
	PROPOSED EOP
	PROPOSED CENTERLINE
	PROPOSED BACK OF CURB
	50' NEUSE RIPARIAN BUFFER
	BUFFER ZONE 1 AND 2
	TOP OF CREEK
	PROPOSED SCM
	PROPOSED WATERLINE
	PROPOSED SEWERLINE
	PROPOSED MANHOLE
	PROPOSED MANHOLE
	PROPOSED WATER METER
	PROPOSED SEWER SERVICE

NOTE:
1. UTILITY SERVICES OF EXISTING PROPERTIES SHALL BE CONFIRMED PRIOR TO CONSTRUCTION TO ENSURE PROPOSED DEVELOPMENT IS NOT IN CONFLICT. CONTACT AMERICAN ENGINEERING IF THERE ARE ANY DISCREPENCIES.
2. WATER MAIN AT TINSLEY CREST LOOP WILL BE CONSTRUCTED TO THE EXISTING BOA WITH KALAS FALLS PHASE 1. WE'RE ANTICIPATING CONSTRUCTION OF FM TO BE DONE PRIOR TO THE CONSTRUCTION OF THIS PROJETCT.

CITY OF RALEIGH - PLANS AUTHORIZED FOR CONSTRUCTION

Electronic Approval: This approval is being issued electronically. This approval is valid only upon the signature of a City of Raleigh Review Officer below. The City will retain a copy of the approved plans. Any work authorized by this approval must proceed in accordance with the plans kept on file with the City. This electronic approval may not be edited once issued. Any modification to this approval once issued will invalidate this approval.

City of Raleigh Development Approval _____

Raleigh Water Review Officer

North Carolina 811
*** 3 Days Before Digging ***
North Carolina 811
811 or 1-800-632-4949
Remote Ticket Entry
http://nc811.org/remoteticketentry.htm

AMERICAN Engineering
American Engineering Associates - Southeast, P.A.
4020 Westchase Boulevard, Suite 450
Raleigh, NC 27607
919-469-1101

NORTH CAROLINA AMERICAN ENGINEERING ASSOCIATES SOUTHEAST C-3881 CERTIFICATE OF AUTHORIZATION

PRELIMINARY

PRELIMINARY
DO NOT USE FOR CONSTRUCTION

NORTH CAROLINA PROFESSIONAL ENGINEER SEAL 045202 JACOB P. KLEIN
Digitally signed by Jacob Klein
2024.12.02 12:25:32 -05'00'

FOR INFORMATION, ONLY

NO.	DATE	REVISION:

STIPULATION FOR REUSE

THIS DRAWING WAS PREPARED FOR USE ON THE SPECIFIC SITE, NAMED HEREON, CONTEMPORANEOUSLY WITH ITS ISSUE DATE AS LISTED, HEREON, AND IT IS NOT SUITABLE FOR USE ON A DIFFERENT PROJECT SITE OR AT A LATER TIME. USE OF THIS DRAWING FOR REFERENCE OR EXAMPLE ON ANOTHER PROJECT REQUIRES THE SERVICES OF PROPERLY LICENSED ARCHITECTS AND ENGINEERS. REPRODUCTION OF THIS DRAWING FOR REUSE ON ANOTHER PROJECT IS NOT AUTHORIZED AND MAY BE CONTRARY TO THE LAW.

THE PRESERVE AT MOODY FARM

ROLESVILLE ROAD
WAKE COUNTY, NC

JOB NUMBER: 21-002
CHECKED BY: JK
DRAWN BY: RC & SM
DATE: 12/02/2024

SHEET TITLE:

UTILITY PLAN C

SHEET NO.:

C6.3

Z:\Jobs\21-002 Moody Development Tract (R21002)\dwg_Working Dwgs\Construction Set\C6-C10Utilities Plan.dwg
December 2, 2024

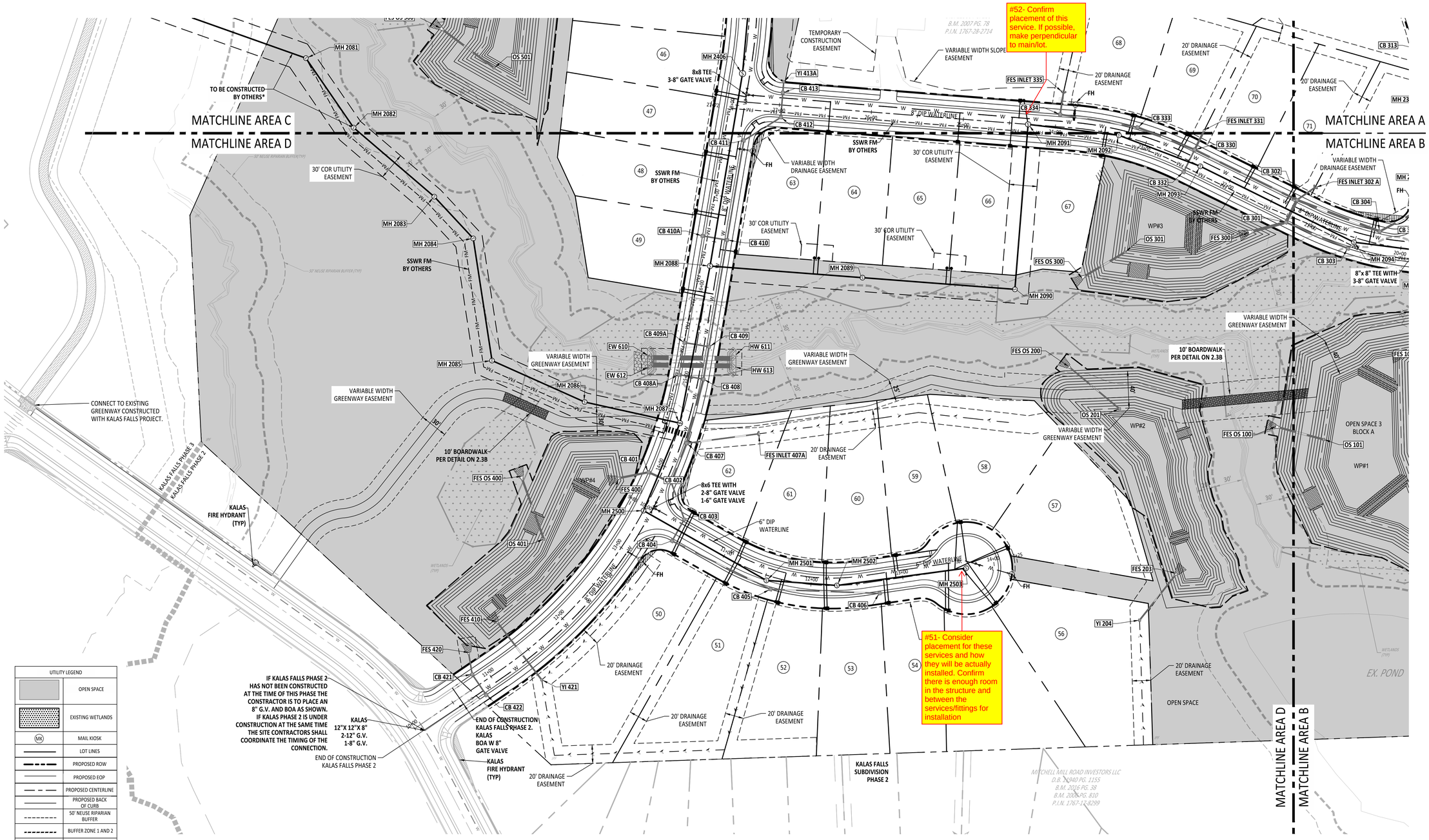

UTILITY LEGEND	
	OPEN SPACE
	EXISTING WETLANDS
MK	MAIL KIOSK
	LOT LINES
	PROPOSED ROW
	PROPOSED EOP
	PROPOSED CENTERLINE
	PROPOSED BACK OF CURB
	50' NEUSE RIPARIAN BUFFER
	BUFFER ZONE 1 AND 2
	TOP OF CREEK
	PROPOSED SCM
	PROPOSED WATERLINE
	PROPOSED SEWERLINE
	PROPOSED MANHOLE
	PROPOSED MANHOLE
	PROPOSED WATER METER
	PROPOSED SEWER SERVICE

CITY OF RALEIGH - PLANS AUTHORIZED FOR CONSTRUCTION

Electronic Approval: This approval is being issued electronically. This approval is valid only upon the signature of a City of Raleigh Review Officer below. The City will retain a copy of the approved plans. Any work authorized by this approval must proceed in accordance with the plans kept on file with the City. This electronic approval may not be edited once issued. Any modification to this approval once issued will invalidate this approval.

City of Raleigh Development Approval _____

Raleigh Water Review Officer

North Carolina 811

*** 3 Days Before Digging ***
North Carolina 811
811 or 1-800-632-4949
Remote Ticket Entry
http://nc811.org/remoteticketentry.htm

AMERICAN Engineering
American Engineering Associates - Southeast, P.A.
4020 Westchase Boulevard, Suite 450
Raleigh, NC 27607
919-469-1101

NORTH CAROLINA AMERICAN ENGINEERING ASSOCIATES SOUTHEAST C-3881 CERTIFICATE OF AUTHORIZATION

PRELIMINARY

PRELIMINARY DO NOT USE FOR CONSTRUCTION

NORTH CAROLINA PROFESSIONAL ENGINEER SEAL 045268 JACOB P. KLEIN

Digitally signed by Jacob Klein
DN: cn=Jacob Klein, o=AMERICAN ENGINEERING ASSOCIATES SOUTHEAST, ou=Engineering, email=jklein@aeasoutheast.com, c=US
Date: 2024.12.02 15:32:00 -05'00'

FOR INFORMATION, ONLY

NO.	DATE	REVISION:

STIPULATION FOR REUSE

THIS DRAWING WAS PREPARED FOR USE ON THE SPECIFIC SITE, NAMED HEREON, CONTEMPORANEOUSLY WITH ITS ISSUE DATE AS LISTED, HEREON, AND IT IS NOT SUITABLE FOR USE ON A DIFFERENT PROJECT SITE OR AT A LATER TIME. USE OF THIS DRAWING FOR REFERENCE OR EXAMPLE ON ANOTHER PROJECT REQUIRES THE SERVICES OF PROPERLY LICENSED ARCHITECTS AND ENGINEERS. REPRODUCTION OF THIS DRAWING FOR REUSE ON ANOTHER PROJECT IS NOT AUTHORIZED AND MAY BE CONTRARY TO THE LAW.

THE PRESERVE AT MOODY FARM

ROLESVILLE ROAD
WAKE COUNTY, NC

JOB NUMBER: 21-002
CHECKED BY: JK
DRAWN BY: RC & SM
DATE: 12/02/2024

SHEET TITLE:

UTILITY PLAN D

SHEET NO.:

C6.4

December 2, 2024

Z:\2021-002 Moody Development Tract (R21002)\Dwg_Working Dwgs\Construction Set\C6.0-Utilities Plan.dwg

10-YEAR EROSION & SEDIMENT CONTROL TEMPORARY DIVERSION DITCH CALCULATIONS (2:1 SIDE SLOPES)

TDD #	DRAINAGE AREA (AC)	AVERAGE SLOPE (%)	WIDTH (FT)	DEPTH (FT)	V_{10} (FT/S)	CALCULATED τ (LBS/FT^3)	RECOMMENDED LINER	LINER ALLOWABLE τ (LBS/FT^3)
1	1.79	3.12	6	1.5	4.52	1.89	AM. EXCELISOR CO.; CURLEX II.98; 2 NETS	2
2	0.89	8.08	4	1	5.60	3.28	E. COAST ERO. BLANK.; COIR, 3 NETS	3.50
3	0.34	0.84	4	1	1.85	0.37	JUTE NETTING	0.45
4	0.77	4.03	4	1	3.92	1.61	AM. EXCELISOR CO.; CURLEX II.73; 2 NETS	1.75

NOTE: ALL TEMPORARY DIVERSION DITCHES (TDD) ARE TRIANGULAR.
TRACTIVE FORCE, τ, IS CALCULATED USING: $\tau = (\gamma)(D_{CHAN})(S_{CHAN})$
WHERE:

- γ IS THE UNIT WEIGHT OF WATER (ASSUMED TO BE 62.4 LB/FT^3)
- D_{CHAN} IS THE DEPTH OF FLOW IN THE CHANNEL (FT/FT)
- S_{CHAN} IS THE SLOPE OF THE CHANNEL (FT/FT)

RIP RAP DISSIPATER CALCULATIONS 10-YEAR STORM

OUTLET ID	PIPE DIAMETER (IN)	PIPE VELOCITY (FPS)	STONE CLASS	STONE DEPTH (IN)	STONE MATERIAL (TONS)	GEO-TEXTILE (SY)	START WIDTH (FT)	END WIDTH (FT)	LENGTH (FT)
FES 100	18	6.40	B	12	2	7	3	9	6
FES 125	24	3.36	B	12	3	11	4	12	8
FES OS 100	24	2.99	B	12	3	11	4	12	8
FES 110	15	3.65	B	12	2	7	WOD	WOD	5
FES 120	15	2.45	B	12	2	7	WOD	WOD	5
EW 101	42	4.69	I	18	13	30	7	21	14
FES OS 200	18	1.12	B	12	2	7	3	9	6
FES 203	18	2.53	B	12	2	7	3	9	6
FES 300	36	3.54	I	18	10	23	6	18	12
FES OS 300	24	8.21	I	18	4	12	4	12	8
FES 400	24	3.26	B	12	3	11	4	12	8
FES OS 400	24	6.40	B	12	3	11	4	12	8
FES 410	18	3.71	B	12	2	7	3	9	6
FES 420	15	0.49	B	12	2	7	WOD	WOD	5
FES 500	30	5.26	B	12	5	16	5	15	10
FES OS 500	24	3.88	B	12	3	11	4	12	8
FES 602	18	4.12	B	12	3	10	WOD	WOD	6
EW 610	60 (DBL)	7.33	I	18	52	112	16	48	32

CALCULATIONS WERE DETERMINED FROM NCDOT DETAIL 876.02 GUIDE FOR RIP RAP AT PIPE OUTLETS

VALUES SHOWN IN TABLE ABOVE ARE MINIMUM QUANTITIES AND DIMENSIONS

WOD IS ABBREVIATION FOR WIDTH OF DITCH

DBL IS DOUBLE BARELL PIPE

SSWR - STRUCTURE TABLE

STRUCTURE NAME:	DESCRIPTION	PIPES IN:	PIPES OUT
MH 2307	SSWR MH 5' RIM = 391.23 INV IN = 377.89 INV OUT = 377.69	8" PVC INV.=377.89	8" PVC INV.=377.69
MH 2098	SSWR MH 4' RIM = 388.87 INV IN = 377.87 INV OUT = 377.67	8" PVC INV.=377.87	8" PVC INV.=377.67
MH 2203	SSWR MH 5' RIM = 387.82 INV OUT = 369.38		8" PVC INV.=369.38
MH 2099	SSWR MH 4' RIM = 387.14 INV IN = 378.73 INV OUT = 378.53	8" PVC INV.=378.73	8" PVC INV.=378.53
MH 2100	SSWR MH 4' RIM = 386.29 INV OUT = 379.29		8" PVC INV.=379.29
MH 2308	SSWR MH 4' RIM = 384.19 INV OUT = 380.00		8" PVC INV.=380.00
MH 2097	SSWR MH 4' RIM = 381.39 INV IN = 372.29 INV OUT = 372.09	8" PVC INV.=372.29	8" PVC INV.=372.09
MH 2304	SSWR MH 4' RIM = 380.19 INV IN = 372.33 INV OUT = 371.27	8" PVC INV.=372.33	8" PVC INV.=371.27
MH 2204	SSWR MH 4' RIM = 379.49 INV OUT = 366.88		8" PVC INV.=366.88
MH 2305	SSWR MH 4' RIM = 378.75 INV IN = 371.92 INV OUT = 370.72	8" PVC INV.=371.92	8" PVC INV.=370.72
MH 2306	SSWR MH 4' RIM = 378.50 INV OUT = 372.45		8" PVC INV.=372.45
MH 2303	SSWR MH 4' RIM = 377.58 INV IN = 370.14 INV IN = 370.50 INV OUT = 369.94	8" PVC INV.=370.14 8" PVC INV.=370.50	8" PVC INV.=369.94
MH 2202	SSWR MH 4' RIM = 377.50 INV IN = 365.86 INV IN = 366.45 INV OUT = 365.66	8" PVC INV.=365.86 8" PVC INV.=366.45	8" PVC INV.=365.66
MH 2302	SSWR MH 4' RIM = 376.97 INV IN = 369.64 INV OUT = 369.44	8" PVC INV.=369.64	8" PVC INV.=369.44
MH 2301	SSWR MH 4' RIM = 375.81 INV IN = 368.57 INV OUT = 368.37	8" PVC INV.=368.57	8" PVC INV.=368.37
MH 2110	SSWR MH 4' RIM = 375.00 INV IN = 366.12 INV OUT = 365.92	8" PVC INV.=366.12	8" PVC INV.=365.92
MH 2111	SSWR MH 4' RIM = 374.79 INV IN = 367.08 INV OUT = 366.88	8" PVC INV.=367.08	8" PVC INV.=366.88
MH 2409	SSWR MH 5' RIM = 374.76 INV OUT = 357.25		8" PVC INV.=357.25
MH 2112	SSWR MH 4' RIM = 374.00 INV OUT = 367.56		8" PVC INV.=367.56
MH 2503	SSWR MH 4' RIM = 373.79 INV OUT = 364.20		8" PVC INV.=364.20
MH 2096	SSWR MH 4' RIM = 373.78 INV IN = 363.42 INV IN = 364.03 INV OUT = 362.33	8" PVC INV.=363.42 8" PVC INV.=364.03	8" PVC INV.=362.33
MH 2300	SSWR MH 4' RIM = 373.31 INV IN = 366.20 INV OUT = 366.00	8" PVC INV.=366.20	8" PVC INV.=366.00
MH 2201	SSWR MH 4' RIM = 372.52 INV IN = 364.50 INV OUT = 362.80	8" PVC INV.=364.50	8" PVC INV.=362.80
MH 2502	SSWR MH 4' RIM = 370.88 INV IN = 361.52 INV OUT = 361.32	8" PVC INV.=361.52	8" PVC INV.=361.32
MH 2406	SSWR MH 6' RIM = 370.35 INV IN = 346.56 INV OUT = 346.36	8" PVC INV.=346.56	8" PVC INV.=346.36

SSWR - STRUCTURE TABLE

STRUCTURE NAME:	DESCRIPTION	PIPES IN:	PIPES OUT
MH 2407	SSWR MH 6' RIM = 369.82 INV IN = 347.39 INV OUT = 347.19	8" PVC INV.=347.39	8" PVC INV.=347.19
MH 2091	SSWR MH 5' RIM = 368.52 INV IN = 356.32 INV OUT = 356.02	8" PVC INV.=356.32	8" PVC INV.=356.02
MH 2200	SSWR MH 4' RIM = 368.37 INV IN = 361.77 INV IN = 360.27 INV OUT = 360.07	8" PVC INV.=361.77 8" PVC INV.=360.27	8" PVC INV.=360.07
MH 2501	SSWR MH 4' RIM = 367.90 INV IN = 359.70 INV OUT = 359.50	8" PVC INV.=359.70	8" PVC INV.=359.50
MH 2092	SSWR MH 4' RIM = 367.80 INV IN = 357.02 INV OUT = 356.82	8" PVC INV.=357.02	8" PVC INV.=356.82
MH 2408	SSWR MH 5' RIM = 367.77 INV IN = 350.46 INV IN = 348.66 INV OUT = 348.46	8" PVC INV.=350.46 8" PVC INV.=348.66	8" PVC INV.=348.46
MH 2095	SSWR MH 4' RIM = 367.73 INV IN = 359.71 INV IN = 359.51 INV OUT = 359.31	8" PVC INV.=359.71 8" PVC INV.=359.51	8" PVC INV.=359.31
MH 2093	SSWR MH 4' RIM = 366.85 INV IN = 357.69 INV OUT = 357.49	8" PVC INV.=357.69	8" PVC INV.=357.49
MH 2094	SSWR MH 4' RIM = 366.59 INV IN = 358.90 INV OUT = 358.70	8" PVC INV.=358.90	8" PVC INV.=358.70
MH 2088	SSWR MH 5' RIM = 363.81 INV IN = 345.20 INV IN = 345.20 INV OUT = 344.54	8" PVC INV.=345.20 8" PVC INV.=345.20	8" PVC INV.=344.54
MH 2500	SSWR MH 4' RIM = 363.57 INV IN = 352.85 INV OUT = 352.65	8" PVC INV.=352.85	8" PVC INV.=352.65
MH 2087	SSWR MH 5' RIM = 362.30 INV IN = 345.06 INV IN = 343.50 INV OUT = 343.30	8" PVC INV.=345.06 8" PVC INV.=343.50	8" PVC INV.=343.30
MH 2410	SSWR MH 4' RIM = 359.99 INV IN = 349.74 INV OUT = 349.54	8" PVC INV.=349.74	8" PVC INV.=349.54
MH 2411	SSWR MH 4' RIM = 358.00 INV OUT = 350.47		8" PVC INV.=350.47
MH 2090	SSWR MH 4' RIM = 357.70 INV IN = 351.18 INV OUT = 350.98	8" PVC INV.=351.18	8" PVC INV.=350.98
MH 2089	SSWR MH 4' RIM = 357.54 INV IN = 349.32 INV OUT = 349.12	8" PVC INV.=349.32	8" PVC INV.=349.12
MH 2086	SSWR MH 4' RIM = 354.04 INV IN = 342.75 INV OUT = 342.55	8" PVC INV.=342.75	8" PVC INV.=342.55
MH 2085	SSWR MH 4' RIM = 352.24 INV IN = 341.94 INV OUT = 341.74	8" PVC INV.=341.94	8" PVC INV.=341.74
MH 2084	SSWR MH 4' RIM = 348.65 INV IN = 341.01 INV OUT = 340.81	8" PVC INV.=341.01	8" PVC INV.=340.81
MH 2082	SSWR MH 4' RIM = 347.52 INV IN = 338.24 INV OUT = 338.04	8" PVC INV.=338.24	8" PVC INV.=338.04
MH 2083	SSWR MH 4' RIM = 347.50 INV IN = 340.17 INV OUT = 339.97	8" PVC INV.=340.17	8" PVC INV.=339.97
MH 2081	SSWR MH 4' RIM = 346.57 INV IN = 335.99 INV OUT = 335.79	8" PVC INV.=335.99	8" PVC INV.=335.79
MH 208	SSWR MH 4' RIM = 345.16 INV IN = 334.53	8" PVC INV.=334.53	

CITY OF RALEIGH - PLANS AUTHORIZED FOR CONSTRUCTION

Electronic Approval: This approval is being issued electronically. This approval is valid only upon the signature of a City of Raleigh Review Officer below. The City will retain a copy of the approved plans. Any work authorized by this approval must proceed in accordance with the plans kept on file with the City. This electronic approval may not be edited once issued. Any modification to this approval once issued will invalidate this approval.

City of Raleigh Development Approval ______________________

Raleigh Water Review Officer

North Carolina 811
www.nc811.org
*** 3 Days Before Digging ***
North Carolina 811
811 or 1-800-632-4949
Remote Ticket Entry
http://nc811.org/remoteticketentry.htm

AMERICAN Engineering
American Engineering Associates - Southeast, P.A.
4020 Westchase Boulevard, Suite 450
Raleigh, NC 27607
919-469-1101

NORTH CAROLINA AMERICAN ENGINEERING ASSOCIATES SOUTHEAST C-3881 CERTIFICATE OF AUTHORIZATION

PRELIMINARY - DO NOT USE FOR CONSTRUCTION

NORTH CAROLINA PROFESSIONAL ENGINEER JAKOB P. KLEIN
Digitally signed by Jakob Klein
Date: 2024.12.02

NO.	DATE	REVISION:

STIPULATION FOR REUSE

THIS DRAWING WAS PREPARED FOR USE ON THE SPECIFIC SITE, NAMED HEREON, CONTEMPORANEOUSLY WITH ITS ISSUE DATE AS LISTED, HEREON. AND IT IS NOT SUITABLE FOR USE ON A DIFFERENT PROJECT SITE OR AT A LATER TIME. USE OF THIS DRAWING FOR REFERENCE OR EXAMPLE ON ANOTHER PROJECT REQUIRES THE SERVICES OF PROPERLY LICENSED ARCHITECTS AND ENGINEERS. REPRODUCTION OF THIS DRAWING FOR REUSE ON ANOTHER PROJECT IS NOT AUTHORIZED AND MAY BE CONTRARY TO THE LAW.

THE PRESERVE
AT
MOODY FARM

ROLESVILLE ROAD
WAKE COUNTY, NC

JOB NUMBER: 21-002
CHECKED BY: JK
DRAWN BY: RC & SM
DATE: 12/02/2024

SHEET TITLE:

SCHEDULE

SHEET NO.:
C7.0

Z:\Jobs\21-002 Moody Development Tract (R210002)\dwg_Working Dwgs\Construction Set\7.0 Schedule.dwg
December 2, 2024

#54- It appears as if upstream and downstream table headers have been flipped

SCM 1 - PIPE SUMMARY

DOWNSTREAM STRUCTURE	UPSTREAM STRUCTURE	PIPE SIZE	LENGTH	SLOPE	DOWNSTREAM INVERT (FT)	UPSTREAM INVERT (FT)
CB 101	FES 100	18"	229.12	2.20%	363.00	368.04
CB 102	CB 101	18"	27.00	0.52%	368.14	368.28
CB 103	CB 102	18"	45.91	3.48%	368.38	369.98
CB 104	CB 103	15"	27.00	0.52%	370.18	370.32
CB 105	CB 103	15"	244.37	2.96%	370.08	377.31
CB 106	CB 105	15"	27.04	0.63%	378.23	378.40
CB 106A	CB 106	15"	6.01	0.50%	378.50	378.53
CB 107	CB 105	15"	252.43	2.97%	377.42	384.92
CB 111	FES 110	18"	96.03	0.58%	380.50	381.06
CB 111A	CB 111	15"	5.93	0.50%	381.16	381.19
CB 114	CB 111	15"	107.82	1.00%	381.37	382.45
CB 115	CB 114	15"	27.00	0.67%	382.55	382.73
CB 115A	CB 115	15"	6.01	0.50%	382.83	382.86
CB 116	CB 115	15"	59.00	0.75%	382.83	383.27
CB 116A	CB 116	15"	5.99	0.50%	382.93	382.96
CB 121	FES 120	15"	94.32	0.56%	368.50	369.03
CB 122	CB 121	15"	59.04	1.00%	369.13	369.72
CB 123	CB 122	15"	68.95	1.00%	369.82	370.51
DI 126	FES 125	24"	41.51	0.50%	363.50	363.71

SCM 1 Outfall - PIPE SUMMARY

DOWNSTREAM STRUCTURE	UPSTREAM STRUCTURE	PIPE SIZE	LENGTH	SLOPE	DOWNSTREAM INVERT (FT)	UPSTREAM INVERT (FT)
OS 101	FES OS 100	24"	53.97	1.39%	359.00	359.75

SCM 2 - PIPE SUMMARY

DOWNSTREAM STRUCTURE	UPSTREAM STRUCTURE	PIPE SIZE	LENGTH	SLOPE	DOWNSTREAM INVERT (FT)	UPSTREAM INVERT (FT)
YI 204	FES 203	18"	64.79	1.16%	361.50	362.25

SCM 2 Outfall - PIPE SUMMARY

DOWNSTREAM STRUCTURE	UPSTREAM STRUCTURE	PIPE SIZE	LENGTH	SLOPE	DOWNSTREAM INVERT (FT)	UPSTREAM INVERT (FT)
OS 201	FES OS 200	18"	72.00	1.04%	357.00	357.75

SCM 3 - PIPE SUMMARY

DOWNSTREAM STRUCTURE	UPSTREAM STRUCTURE	PIPE SIZE	LENGTH	SLOPE	DOWNSTREAM INVERT (FT)	UPSTREAM INVERT (FT)
CB 301	FES 300	36"	42.07	0.50%	361.00	361.21
CB 302	CB 301	36"	27.00	0.48%	361.31	361.44
CB 302	CB 304	30"	95.97	0.68%	362.31	361.65
CB 303	CB 301	18"	73.03	0.48%	361.30	361.65
CB 306	CB 305	15"	27.00	1.14%	364.89	364.58
CB 307	CB 304	24"	50.86	0.49%	362.56	362.81
CB 308	CB 307	24"	27.00	0.52%	362.91	363.05
CB 308	CB 306	24"	43.54	1.00%	363.99	363.55
CB 309	CB 308	24"	59.52	2.91%	363.34	365.07
CB 311	CB 309	24"	63.41	3.00%	365.15	367.05
CB 312	CB 311	18"	59.35	3.00%	367.15	368.93
CB 313	CB 312	15"	27.00	0.67%	369.94	370.12
CB 315	CB 312	18"	73.13	1.00%	369.43	370.16
CB 317	CB 315	18"	57.69	1.01%	370.26	370.84
CB 319	CB 317	18"	60.77	1.00%	370.94	371.55
CB 323	JB 176	15"	60.48	0.50%	373.95	374.25
CB 325	CB 323	15"	55.87	0.50%	374.35	374.63
CB 330	CB 302	24"	123.52	0.50%	361.54	362.16
CB 332	CB 330	15"	27.00	0.52%	362.90	363.04
CB 333	CB 330	24"	66.36	0.50%	362.67	363.00
CB 334	CB 333	18"	85.14	0.51%	363.20	363.63
FES INLET 302 A	CB 302	18"	23.96	1.04%	361.94	362.19
FES INLET 331	CB 330	24"	24.00	0.50%	362.32	362.44
FES INLET 335	CB 334	18"	24.00	0.50%	363.73	363.85
JB 176	CB 319	15"	79.65	0.50%	373.45	373.85
YI 310	CB 309	15"	24.00	1.00%	365.80	366.04
YI 314	CB 312	15"	35.50	2.99%	369.94	371.00
YI 316	CB 315	15"	24.00	5.00%	371.20	372.40
YI 318	CB 317	15"	24.00	1.00%	371.60	371.84
YI 320	CB 319	15"	24.00	1.00%	373.26	373.50
YI 322	YI 324	15"	76.04	2.37%	377.70	379.50
YI 324	CB 323	15"	24.00	5.67%	374.75	376.11

SCM 3 Outfall - PIPE SUMMARY

DOWNSTREAM STRUCTURE	UPSTREAM STRUCTURE	PIPE SIZE	LENGTH	SLOPE	DOWNSTREAM INVERT (FT)	UPSTREAM INVERT (FT)
OS 301	FES OS 300	24"	54.53	1.38%	357.00	357.75

SCM 4 - PIPE SUMMARY

DOWNSTREAM STRUCTURE	UPSTREAM STRUCTURE	PIPE SIZE	LENGTH	SLOPE	DOWNSTREAM INVERT (FT)	UPSTREAM INVERT (FT)
CB 401	FES 400	24"	34.25	0.50%	357.00	357.17
CB 402	CB 401	24"	27.00	0.50%	357.26	357.40
CB 403	CB 402	15"	42.39	0.50%	357.51	357.72
CB 404	CB 403	15"	27.00	0.50%	357.82	357.96
CB 405	CB 404	15"	118.81	2.35%	358.07	360.86
CB 406	CB 405	15"	118.49	1.31%	363.06	364.61
CB 407	CB 402	24"	45.60	0.50%	357.50	357.73
CB 408	CB 407	24"	71.73	0.64%	357.95	358.41
CB 408	CB 408A	15"	27.00	0.72%	358.88	358.68
CB 409	CB 408	18"	35.77	0.50%	358.54	358.72
CB 409	CB 409A	15"	27.00	1.38%	359.06	358.68
CB 410	CB 409	15"	117.30	1.18%	358.86	360.25
CB 410	CB 410A	15"	27.00	0.96%	360.90	360.64
CB 411	CB 410	15"	109.50	3.41%	360.58	364.31
CB 412	CB 411	15"	47.14	0.51%	364.41	364.65
CB 413	CB 412	15"	27.00	0.50%	364.75	364.89
FES INLET 407A	CB 407	15"	78.21	0.51%	357.83	358.23
YI 413A	CB 413	15"	11.88	1.00%	364.99	365.11
YI 421	FES 410	18"	79.66	1.00%	356.95	357.75

SCM 4 Outfall - PIPE SUMMARY

DOWNSTREAM STRUCTURE	UPSTREAM STRUCTURE	PIPE SIZE	LENGTH	SLOPE	DOWNSTREAM INVERT (FT)	UPSTREAM INVERT (FT)
OS 401	FES OS 400	24"	72.49	0.51%	353.38	353.75

SCM 5 - PIPE SUMMARY

DOWNSTREAM STRUCTURE	UPSTREAM STRUCTURE	PIPE SIZE	LENGTH	SLOPE	DOWNSTREAM INVERT (FT)	UPSTREAM INVERT (FT)
CB 502	YI 501	24"	163.56	3.24%	347.25	352.55
CB 503	CB 502	15"	27.00	0.52%	353.30	353.44
CB 504	CB 502	24"	215.40	4.00%	352.65	361.27
CB 505	CB 504	24"	48.26	0.99%	361.37	361.85
CB 506	CB 505	24"	27.00	0.52%	362.36	36[illegible]
CB 507	CB 506	24"	47.06	0.53%	362.58	36[illegible]
CB 507A	CB 507	15"	6.00	0.50%	363.58	36[illegible]
CB 508	CB 507	18"	27.00	0.52%	362.93	363.07
CB 511	CB 510	15"	27.00	0.89%	364.24	364.00
CB 511	CB 504	15"	64.21	1.32%	362.27	363.12
CB 513	CB 505	15"	117.76	1.00%	362.69	363.87
CB 514	CB 508	15"	187.90	3.69%	363.26	370.19
CB 515	CB 514	15"	27.53	0.51%	370.29	370.43
CB 516	CB 517	18"	27.02	1.06%	367.17	367.46
CB 517	CB 511	18"	115.87	2.68%	363.77	366.88
YI 501	FES 500	30"	45.55	0.50%	346.92	347.15
YI 509	CB 508	18"	24.00	0.86%	363.18	363.39
YI 513A	CB 513	15"	38.50	1.00%	363.87	364.26

#55- FES's don't have rims, please remove value from table

SCM 5 Outfall - PIPE SUMMARY

DOWNSTREAM STRUCTURE	UPSTREAM STRUCTURE	PIPE SIZE	LENGTH	SLOPE	DOWNSTREAM INVERT (FT)	UPSTREAM INVERT (FT)
OS 501	FES OS 500	24"	72.55	1.03%	343.00	343.75

Culvert Crossing - East - PIPE SUMMARY

DOWNSTREAM STRUCTURE	UPSTREAM STRUCTURE	PIPE SIZE	LENGTH	SLOPE	DOWNSTREAM INVERT (FT)	UPSTREAM INVERT (FT)
HW FES 603	JB 602	42"	82.14	2.51%	364.44	366.50
JB 602	EW 101	42"	67.94	0.50%	364.00	364.34

Culvert Crossing - West - PIPE SUMMARY

DOWNSTREAM STRUCTURE	UPSTREAM STRUCTURE	PIPE SIZE	LENGTH	SLOPE	DOWNSTREAM INVERT (FT)	UPSTREAM INVERT (FT)
HW 611	EW 610	60"	83.38	1.80%	346.50	348.00
HW 613	EW 612	60"	83.38	1.80%	346.50	348.00

Bypass - PIPE SUMMARY

DOWNSTREAM STRUCTURE	UPSTREAM STRUCTURE	PIPE SIZE	LENGTH	SLOPE	DOWNSTREAM INVERT (FT)	UPSTREAM INVERT (FT)
CB 421	FES 420	15"	24.00	0.50%	356.16	356.28
CB 422	CB 421	15"	27.01	0.50%	356.41	356.55
FES INLET 601	FES 602	18"	79.19	4.36%	366.06	369.51

SCM 1 - Structure Table

Structure Name	Details
CB 101	RIM = 373.98 INV IN = 368.140 INV OUT = 368.040
CB 102	RIM = 373.87 INV IN = 368.380 INV OUT = 368.280
CB 103	RIM = 375.04 INV IN = 370.080 INV IN = 370.180 INV OUT = 369.980
CB 104	RIM = 375.04 INV OUT = 370.320
CB 105	RIM = 382.57 INV IN = 377.420 INV IN = 378.229 INV OUT = 377.310
CB 106	RIM = 382.57 INV IN = 378.500 INV OUT = 378.399
CB 106A	RIM = 382.92 INV OUT = 378.530
CB 107	RIM = 390.04 INV OUT = 384.920
CB 111	RIM = 386.00 INV IN = 381.372 INV IN = 381.160 INV OUT = 381.060
CB 111A	RIM = 386.00 INV OUT = 381.190
CB 114	RIM = 387.03 INV IN = 382.550 INV OUT = 382.450
CB 115	RIM = 387.04 INV IN = 382.830 INV IN = 382.830 INV OUT = 382.730
CB 115A	RIM = 387.04 INV OUT = 382.860
CB 116	RIM = 387.89 INV IN = 382.930 INV OUT = 383.270
CB 116A	RIM = 387.94 INV OUT = 382.960
CB 121	RIM = 374.00 INV IN = 369.130 INV OUT = 369.030
CB 122	RIM = 374.04 INV IN = 369.820 INV OUT = 369.720
CB 123	RIM = 375.01 INV OUT = 370.510
DI 126	RIM = 366.50 INV OUT = 363.708
FES 100	RIM = 364.52 INV IN = 363.000
FES 110	RIM = 382.02 INV IN = 380.500
FES 120	RIM = 370.02 INV IN = 368.500
FES 125	RIM = 366.37 INV IN = 363.500

SCM 1 Outfall - Structure Table

Structure Name	Details
FES OS 100	RIM = 361.33 INV IN = 359.000
OS 101	RIM = 363.49 INV OUT = 359.750

SCM 2 - Structure Table

Structure Name	Details
FES 203	RIM = 363.29 INV IN = 361.499
YI 204	RIM = 366.00 INV OUT = 362.250

SCM 2 Outfall - Structure Table

Structure Name	Details
FES OS 200	RIM = 358.79 INV IN = 357.000
OS 201	RIM = 361.43 INV OUT = 357.750

#56- 0.5% min slope

#57- provide min 2' cover on pipes in paved areas

#58- Ensure min drop requirements in storm structures are met
~0.1ft for 0-45 degrees
~0.2ft for 45-90 degrees and increases in pipe size

SCM 3 - Structure Table

Structure Name	Details
CB 301	RIM = 366.14 INV IN = 361.310 INV IN = 361.303 INV OUT = 361.210
CB 302	RIM = 366.04 INV IN = 361.542 INV IN = 361.940 INV IN = 361.654 INV OUT = 361.440
CB 303	RIM = 366.75 INV OUT = 361.651
CB 304	RIM = 366.98 INV IN = 362.560 INV OUT = 362.311
CB 305	RIM = 368.93 INV OUT = 364.893
CB 306	RIM = 368.91 INV IN = 364.584 INV OUT = 363.987
CB 307	RIM = 367.04 INV IN = 362.910 INV OUT = 362.810
CB 308	RIM = 367.09 INV IN = 363.340 INV IN = 363.550 INV OUT = 363.050
CB 309	RIM = 370.04 INV IN = 365.150 INV IN = 365.800 INV OUT = 365.070
CB 311	RIM = 373.03 INV IN = 367.150 INV OUT = 367.050
CB 312	RIM = 374.74 INV IN = 369.430 INV IN = 369.942 INV IN = 369.936 INV OUT = 368.930
CB 313	RIM = 374.73 INV OUT = 370.122
CB 315	RIM = 375.97 INV IN = 370.260 INV IN = 371.198 INV OUT = 370.160
CB 317	RIM = 376.00 INV IN = 370.940 INV IN = 371.601 INV OUT = 370.840
CB 319	RIM = 377.14 INV IN = 373.450 INV IN = 373.255 INV OUT = 371.550
CB 323	RIM = 378.04 INV IN = 374.350 INV IN = 374.750 INV OUT = 374.248
CB 325	RIM = 378.78 INV OUT = 374.629
CB 330	RIM = 367.00 INV IN = 362.670 INV IN = 362.315 INV IN = 362.900 INV OUT = 362.160
CB 332	RIM = 367.03 INV OUT = 363.040
CB 333	RIM = 367.90 INV IN = 363.200 INV OUT = 363.000
CB 334	RIM = 368.63 INV IN = 363.730 INV OUT = 363.630
FES 300	RIM = 363.88 INV IN = 361.000
FES INLET 302 A	RIM = 363.71 INV OUT = 362.190
FES INLET 331	RIM = 363.96 INV OUT = 362.435
FES INLET 335	RIM = 365.37 INV OUT = 363.850
JB 176	RIM = 378.03 INV IN = 373.945 INV OUT = 373.848
YI 310	RIM = 372.06 INV OUT = 366.040
YI 314	RIM = 378.00 INV OUT = 370.996
YI 316	RIM = 377.58 INV OUT = 372.398
YI 318	RIM = 376.93 INV OUT = 371.841
YI 320	RIM = 378.58 INV OUT = 373.495
YI 322	RIM = 385.27 INV OUT = 379.500
YI 324	RIM = 382.30 INV IN = 377.698 INV OUT = 376.110

SCM 3 Outfall - Structure Table

Structure Name	Details
FES OS 300	RIM = 359.33 INV IN = 357.000
OS 301	RIM = 361.38 INV OUT = 357.750

SCM 4 - Structure Table

Structure Name	Details
CB 401	RIM = 363.04 INV IN = 357.265 INV OUT = 357.170
CB 402	RIM = 363.02 INV IN = 357.510 INV IN = 357.503 INV OUT = 357.400
CB 403	RIM = 363.00 INV IN = 357.820 INV OUT = 357.720
CB 404	RIM = 363.00 INV IN = 358.070 INV OUT = 357.955
CB 405	RIM = 368.09 INV IN = 363.060 INV OUT = 360.860
CB 406	RIM = 372.03 INV OUT = 364.610
CB 407	RIM = 362.81 INV IN = 357.948 INV IN = 357.830 INV OUT = 357.731
CB 408	RIM = 362.04 INV IN = 358.683 INV IN = 358.545 INV OUT = 358.409
CB 408A	RIM = 362.03 INV OUT = 358.877
CB 409	RIM = 362.04 INV IN = 358.683 INV IN = 358.862 INV OUT = 358.724
CB 409A	RIM = 362.16 INV OUT = 359.056
CB 410	RIM = 364.99 INV IN = 360.580 INV IN = 360.643 INV OUT = 360.250
CB 410A	RIM = 364.99 INV OUT = 360.903
CB 411	RIM = 368.85 INV IN = 364.410 INV OUT = 364.310
CB 412	RIM = 369.03 INV IN = 364.750 INV OUT = 364.650
CB 413	RIM = 369.03 INV IN = 364.990 INV OUT = 364.885
FES 400	RIM = 358.79 INV IN = 357.000
FES 410	RIM = 358.47 INV IN = 356.953
FES INLET 407A	RIM = 359.75 INV OUT = 358.232
YI 413A	RIM = 369.90 INV OUT = 365.109
YI 421	RIM = 363.00 INV OUT = 357.750

SCM 4 Outfall - Structure Table

Structure Name	Details
FES OS 400	RIM = 355.71 INV IN = 353.380
OS 401	RIM = 357.50 INV OUT = 353.750

SCM 5 - Structure Table

Structure Name	Details
CB 502	RIM = 357.04 INV IN = 352.650 INV IN = 353.300 INV OUT = 352.550
CB 503	RIM = 357.04 INV OUT = 353.440
CB 504	RIM = 366.04 INV IN = 361.370 INV IN = 362.270 INV OUT = 361.270
CB 505	RIM = 367.77 INV IN = 362.360 INV IN = 362.690 INV OUT = 361.850
CB 506	RIM = 367.48 INV IN = 362.580 INV OUT = 362.500
CB 507	RIM = 367.03 INV IN = 362.930 INV IN = 363.580 INV OUT = 362.830
CB 507A	RIM = 367.04 INV OUT = 363.610
CB 508	RIM = 367.03 INV IN = 363.260 INV IN = 363.180 INV OUT = 363.070
CB 510	RIM = 368.57 INV OUT = 364.240
CB 511	RIM = 368.61 INV IN = 364.000 INV IN = 363.770 INV OUT = 363.115
CB 513	RIM = 369.04 INV IN = 363.870 INV OUT = 363.868
CB 514	RIM = 374.04 INV IN = 370.290 INV OUT = 370.190
CB 515	RIM = 374.10 INV OUT = 370.430
CB 516	RIM = 372.04 INV OUT = 367.458
CB 517	RIM = 372.04 INV IN = 367.172 INV OUT = 366.880
FES 500	RIM = 349.26 INV IN = 346.922
YI 501	RIM = 350.00 INV IN = 347.250 INV OUT = 347.150
YI 509	RIM = 367.00 INV OUT = 363.387
YI 513A	RIM = 369.89 INV OUT = 364.255

SCM 5 Outfall - Structure Table

Structure Name	Details
FES OS 500	RIM = 345.33 INV IN = 343.000
OS 501	RIM = 347.43 INV OUT = 343.750

Culvert Crossing - East - Structure Table

Structure Name	Details
EW 101	RIM = 367.96 INV IN = 364.000
HW FES 603	RIM = 370.46 INV OUT = 366.500
JB 602	RIM = 371.25 INV IN = 364.440 INV OUT = 364.340

Culvert Crossing - West - Structure Table

Structure Name	Details
EW 610	RIM = 352.08 INV IN = 346.500
EW 612	RIM = 352.08 INV IN = 346.500
HW 611	RIM = 353.58 INV OUT = 348.000
HW 613	RIM = 353.58 INV OUT = 348.000

Bypass - Structure Table

Structure Name	Details
CB 421	RIM = 360.04 INV IN = 356.414 INV OUT = 356.279
CB 422	RIM = 360.04 INV OUT = 356.549
FES 420	RIM = 357.68 INV IN = 356.159
FES 602	RIM = 367.85 INV IN = 366.056
FES INLET 601	RIM = 371.30 INV OUT = 369.509

CITY OF RALEIGH - PLANS AUTHORIZED FOR CONSTRUCTION

Electronic Approval: This approval is being issued electronically. This approval is valid only upon the signature of a City of Raleigh Review Officer below. The City will retain a copy of the approved plans. Any work authorized by this approval must proceed in accordance with the plans kept on file with the City. This electronic approval may not be edited once issued. Any modification to this approval once issued will invalidate this approval.

City of Raleigh Development Approval ______________________

Raleigh Water Review Officer

North Carolina 811 www.nc811.org
*** 3 Days Before Digging ***
North Carolina 811
811 or 1-800-632-4949
Remote Ticket Entry
http://nc811.org/remoteticketentry.htm

AMERICAN Engineering
American Engineering Associates - Southeast, P.A.
4020 Westchase Boulevard, Suite 450
Raleigh, NC 27607
919-469-1101

NORTH CAROLINA AMERICAN ENGINEERING ASSOCIATES SOUTHEAST C-3881 CERTIFICATE OF AUTHORIZATION

PRELIMINARY - DO NOT USE FOR CONSTRUCTION
NORTH CAROLINA PROFESSIONAL ENGINEER 56508 JAKOB P. KLEIN
Digitally signed by Jakob Klein Date: 2024.12.02

NO.	DATE	REVISION:

STIPULATION FOR REUSE
THIS DRAWING WAS PREPARED FOR USE ON THE SPECIFIC SITE, NAMED HEREON, CONTEMPORANEOUSLY WITH ITS ISSUE DATE AS LISTED, HEREON. AND IT IS NOT SUITABLE FOR USE ON A DIFFERENT PROJECT SITE OR AT A LATER TIME. USE OF THIS DRAWING FOR REFERENCE OR EXAMPLE ON ANOTHER PROJECT REQUIRES THE SERVICES OF PROPERLY LICENSED ARCHITECTS AND ENGINEERS. REPRODUCTION OF THIS DRAWING FOR REUSE ON ANOTHER PROJECT IS NOT AUTHORIZED AND MAY BE CONTRARY TO THE LAW.

THE PRESERVE AT MOODY FARM
ROLESVILLE ROAD
WAKE COUNTY, NC

JOB NUMBER: 21-002
CHECKED BY: JK
DRAWN BY: RC & SM
DATE: 12/02/2024

SHEET TITLE:
SCHEDULE

SHEET NO.: **C7.1**

December 2, 2024
Z:\Jobs\21-002 Moody Development Tract (R210002)\dwg_Working Dwgs\Construction Set\7.0 Schedule.dwg

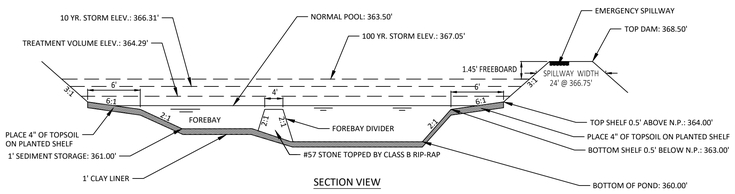

SECTION VIEW

NOTES:
1. SEE SHEET 2.0 FOR SCM CONVERSION SEQUENCE.
2. FOREBAY DIVIDERS ARE TO BE INSTALLED WHILE CONVERTING FROM SEDIMENT BASIN TO WET POND.

01 RETENTION POND
NTS

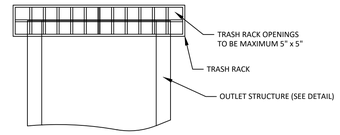

NOTES:
1. TRASH RACK SHALL BE 6" CLEAR OF STRUCTURE TOP AND SIDES. THE TRASH RACK NEED NOT COVER THE TREATMENT OUTLET PIPE.
2. TRASH RACK SHALL BE FASTENED TO EACH SIDE OF THE STRUCTURE AT AT LEAST 2 POINTS. IT SHALL BE EASILY REMOVED FOR MAINTENANCE OR ENTRY INTO THE STRUCTURE.
3. TRASH RACK SHALL ACCOMMODATE VALVE SHAFT THOUGH AN OPENING.
4. TRASH RACK SHALL BE MADE OF DURABLE MATERIAL WHICH WILL NOT RUST OR DETERIORATE IN SUNLIGHT.
5. TOP OF TRASH RACK SHALL HAVE A GRID OF BARS (MAX. 6"x6").

03 TRASH RACK
NTS

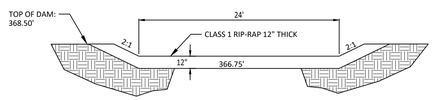

02 EMERGENCY SPILLWAY SECTION
NTS

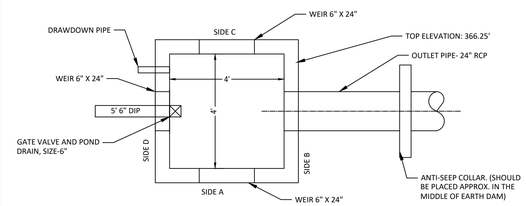

PLAN VIEW

NOTES:
1. WALL THICKNESS AND REINFORCEMENT TO BE DETERMINED BY PRECAST CONCRETE MANUFACTURER.
2. OUTLET STRUCTURE ELEVATIONS SHOWN ON THE DETAILS ON THIS SHEET ARE CRITICAL AND MUST BE WITHIN 0.02' OF THAT SHOWN. IF OUTLET STRUCTURES ARE PRE-CAST OFF-SITE, THE HOLE FOR THE OUTLET PIPE SHALL BE ENLARGED TO ALLOW UP TO 0.3' OF VERTICAL MOVEMENT. WHEN INSTALLED, THE EXCESS OPENING SHALL BE FILLED WITH GROUT.
3. OUTLET PIPES SHALL HAVE AN ANTI-SEEP COLLAR OF CONCRETE LOCATED APPROXIMATELY UNDER THE MIDDLE OF THE DAM IN WHICH IT IS LOCATED. IT SHALL CONSIST OF CONCRETE POURED AROUND THE PIPE IN A VERTICAL DIRECTION. THE COLLAR SHALL BE A SQUARE 8" THICK AND SHALL EXTEND 18" BEYOND THE OUTSIDE OF THE PIPE IN EACH DIRECTION.
4. TREATMENT OUTLET PIPE SHALL NOT BE PVC BUT OTHER MATERIAL SUCH AS GSP WHICH IS NOT SUBJECT TO DETERIORATION IN SUNLIGHT.

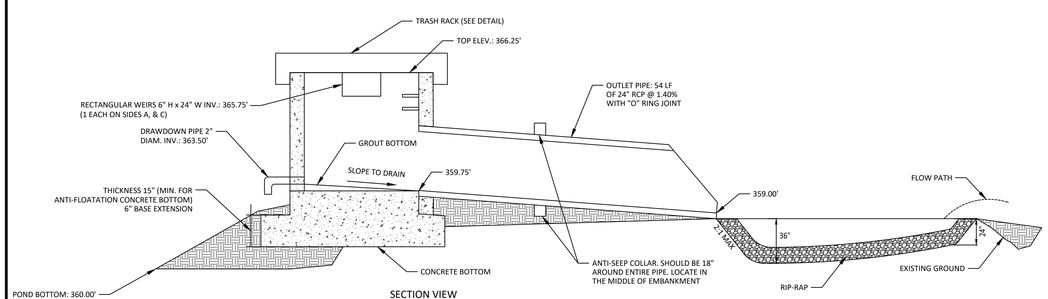

SECTION VIEW

04 OUTLET STRUCTURE #1
NTS

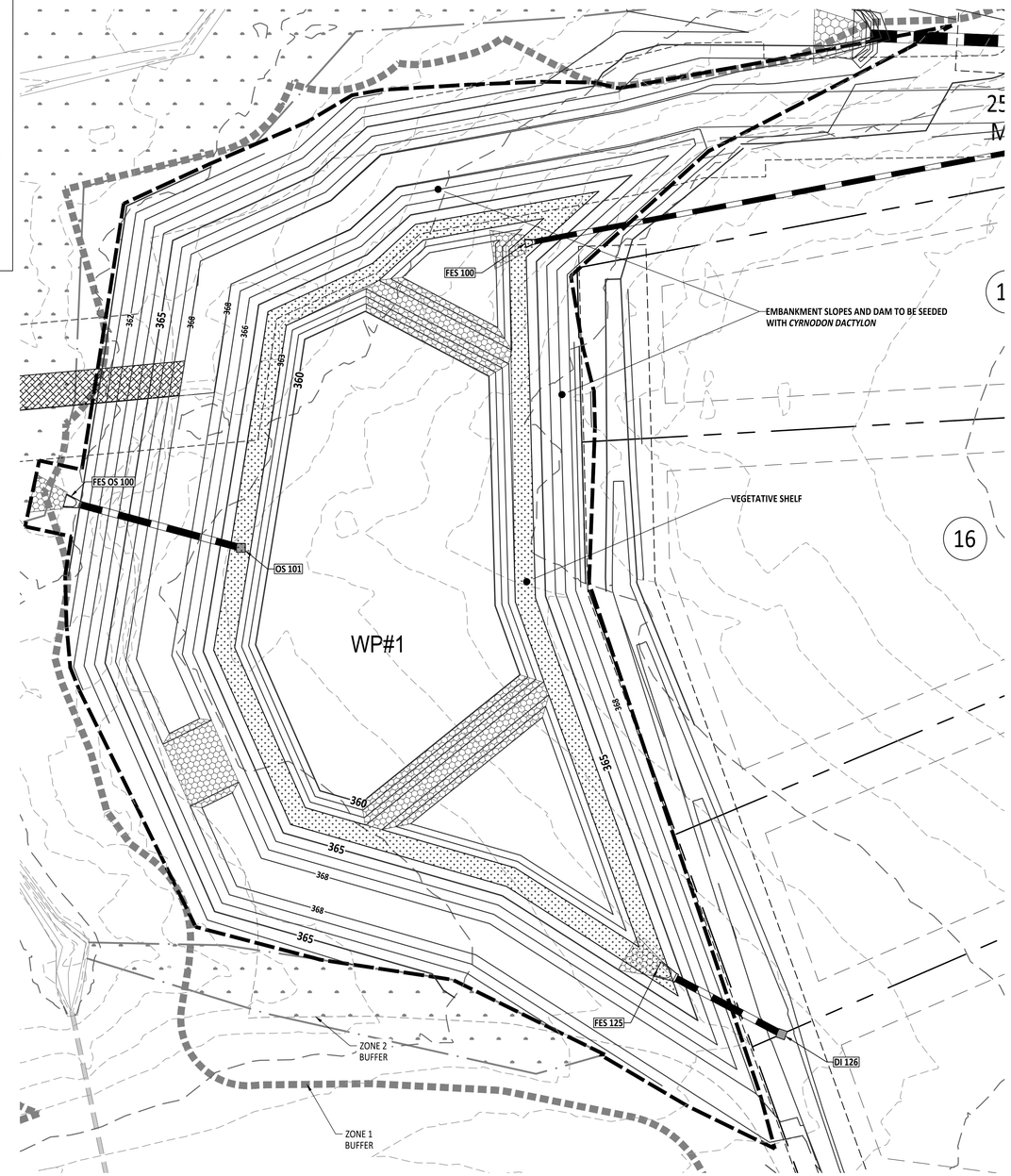

PLANT LIST VEGETATED SHELF PLANT SCHEDULE:

VEGETATED SHELF
(HERB.)

EF	EUPATORUIM FISTRULOSUM	JOE PYE WEED	4-6" POT @ 3' SPACING
HC	HIBICUS COCCINEA	SCARLET ROSE MALLOW	4-6" POT @ 3' SPACING
CG	CHELONE GLABRA	WHITE TURTLEHEAD	4-6" POT @ 3' SPACING
LC	LOBELIA CARDINALIS	CARDINAL FLOWER	4-6" POT @ 3' SPACING

LANDSCAPE PLAN:
VEGETATED SHELF= 3,503 sf (USE 876 PLANTS FROM LIST ABOVE)
USE EQUAL NUMBER OF PLANTS FROM LIST ABOVE

CALCULATION: 50 PLANTS PER 200 SF

GRAPHIC SCALE

20 0 10 20 40 80

(IN FEET)
1 inch = 20

CITY OF RALEIGH - PLANS AUTHORIZED FOR CONSTRUCTION

Electronic Approval: This approval is being issued electronically. This approval is valid only upon the signature of a City of Raleigh Review Officer below. The City will retain a copy of the approved plans. Any work authorized by this approval must proceed in accordance with the plans kept on file with the City. This electronic approval may not be edited once issued. Any modification to this approval once issued will invalidate this approval.

City of Raleigh Development Approval _____

Raleigh Water Review Officer

North Carolina 811 Inc.
*** 3 Days Before Digging ***
North Carolina 811
811 or 1-800-632-4949
Remote Ticket Entry
http://nc811.org/remoteticketentry.htm

AMERICAN Engineering
American Engineering Associates - Southeast, P.A.
4020 Westchase Boulevard, Suite 450
Raleigh, NC 27607
919-469-1101

NORTH CAROLINA AMERICAN ENGINEERING ASSOCIATES SOUTHEAST C-3881 CERTIFICATE OF AUTHORIZATION

PRELIMINARY NOT FOR CONSTRUCTION
NORTH CAROLINA PROFESSIONAL ENGINEER SEAL 19681 JACOB P. KLEIN
Digitally signed by Jacob P. Klein
DN: cn=Jacob P. Klein, o=AMERICAN ENGINEERING ASSOCIATES SOUTHEAST, ou=Engineering, email=jklein@aeasoutheast.com, c=US
Date: 2024.12.02 15:24:52 -05'00'

NO.	DATE	REVISION:

STIPULATION FOR REUSE

THIS DRAWING WAS PREPARED FOR USE ON THE SPECIFIC SITE, NAMED HEREON, CONTEMPORANEOUSLY WITH ITS ISSUE DATE AS LISTED, HEREON, AND IT IS NOT SUITABLE FOR USE ON A DIFFERENT PROJECT SITE OR AT A LATER TIME. USE OF THIS DRAWING FOR REFERENCE OR EXAMPLE ON ANOTHER PROJECT REQUIRES THE SERVICES OF PROPERLY LICENSED ARCHITECTS AND ENGINEERS. REPRODUCTION OF THIS DRAWING FOR REUSE ON ANOTHER PROJECT IS NOT AUTHORIZED AND MAY BE CONTRARY TO THE LAW.

THE PRESERVE AT MOODY FARM

ROLESVILLE ROAD
WAKE COUNTY, NC

JOB NUMBER: 21-002
CHECKED BY: JK
DRAWN BY: RC & SM
DATE: 12/02/2024

SHEET TITLE:
SCM 1

SHEET NO.:
C8.0

December 2, 2024

Z:\Job\21-002 Moody Development Tract (R21000251)\wg_Working Dwgs\Construction Set\8.0 & 1 SCM Plan.dwg

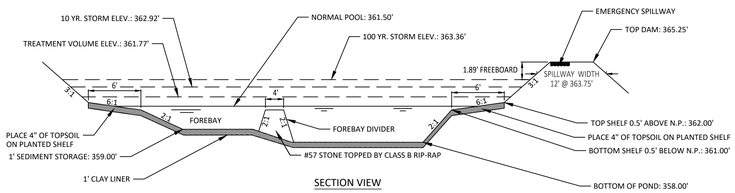

SECTION VIEW

NOTES:
1. SEE SHEET 2.0 FOR SCM CONVERSION SEQUENCE.
2. FOREBAY DIVIDERS ARE TO BE INSTALLED WHILE CONVERTING FROM SEDIMENT BASIN TO WET POND.

01 RETENTION POND
NTS

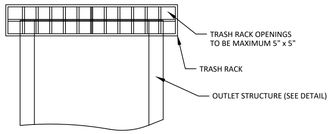

NOTES:
1. TRASH RACK SHALL BE 6" CLEAR OF STRUCTURE TOP AND SIDES. THE TRASH RACK NEED NOT COVER THE TREATMENT OUTLET PIPE.
2. TRASH RACK SHALL BE FASTENED TO EACH SIDE OF THE STRUCTURE AT AT LEAST 2 POINTS. IT SHALL BE EASILY REMOVED FOR MAINTENANCE OR ENTRY INTO THE STRUCTURE.
3. TRASH RACK SHALL ACCOMMODATE VALVE SHAFT THOUGH AN OPENING.
4. TRASH RACK SHALL BE MADE OF DURABLE MATERIAL WHICH WILL NOT RUST OR DETERIORATE IN SUNLIGHT.
5. TOP OF TRASH RACK SHALL HAVE A GRID OF BARS (MAX. 6"x6").

03 TRASH RACK
NTS

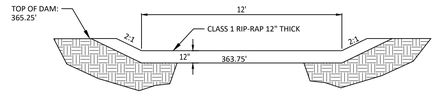

02 EMERGENCY SPILLWAY SECTION
NTS

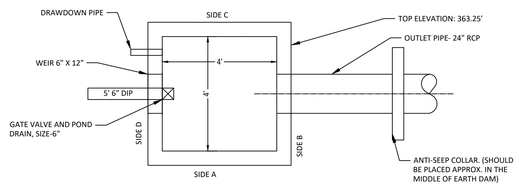

PLAN VIEW

NOTES:
1. WALL THICKNESS AND REINFORCEMENT TO BE DETERMINED BY PRECAST CONCRETE MANUFACTURER.
2. OUTLET STRUCTURE ELEVATIONS SHOWN ON THE DETAILS ON THIS SHEET ARE CRITICAL AND MUST BE WITHIN 0.02' OF THAT SHOWN. IF OUTLET STRUCTURES ARE PRE-CAST OFF-SITE, THE HOLE FOR THE OUTLET PIPE SHALL BE ENLARGED TO ALLOW UP TO 0.3' OF VERTICAL MOVEMENT. WHEN INSTALLED, THE EXCESS OPENING SHALL BE FILLED WITH GROUT.
3. OUTLET PIPES SHALL HAVE AN ANTI-SEEP COLLAR OF CONCRETE LOCATED APPROXIMATELY UNDER THE MIDDLE OF THE DAM IN WHICH IT IS LOCATED. IT SHALL CONSIST OF CONCRETE POURED AROUND THE PIPE IN A VERTICAL DIRECTION. THE COLLAR SHALL BE A SQUARE 8"' THICK AND SHALL EXTEND 18" BEYOND THE OUTSIDE OF THE PIPE IN EACH DIRECTION.
4. TREATMENT OUTLET PIPE SHALL NOT BE PVC BUT OTHER MATERIAL SUCH AS GSP WHICH IS NOT SUBJECT TO DETERIORATION IN SUNLIGHT.

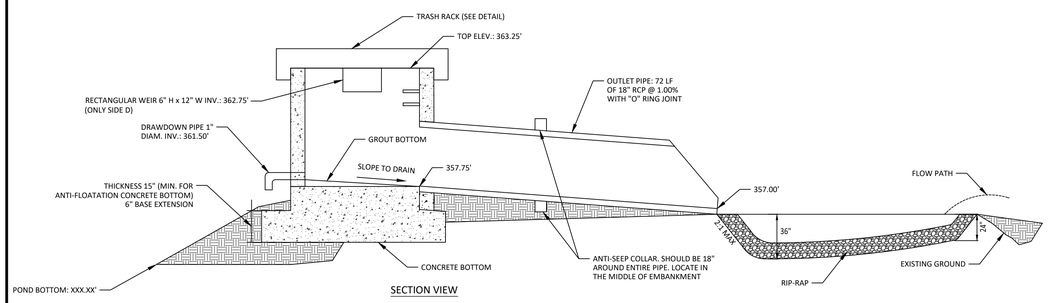

SECTION VIEW

04 OUTLET STRUCTURE #1
NTS

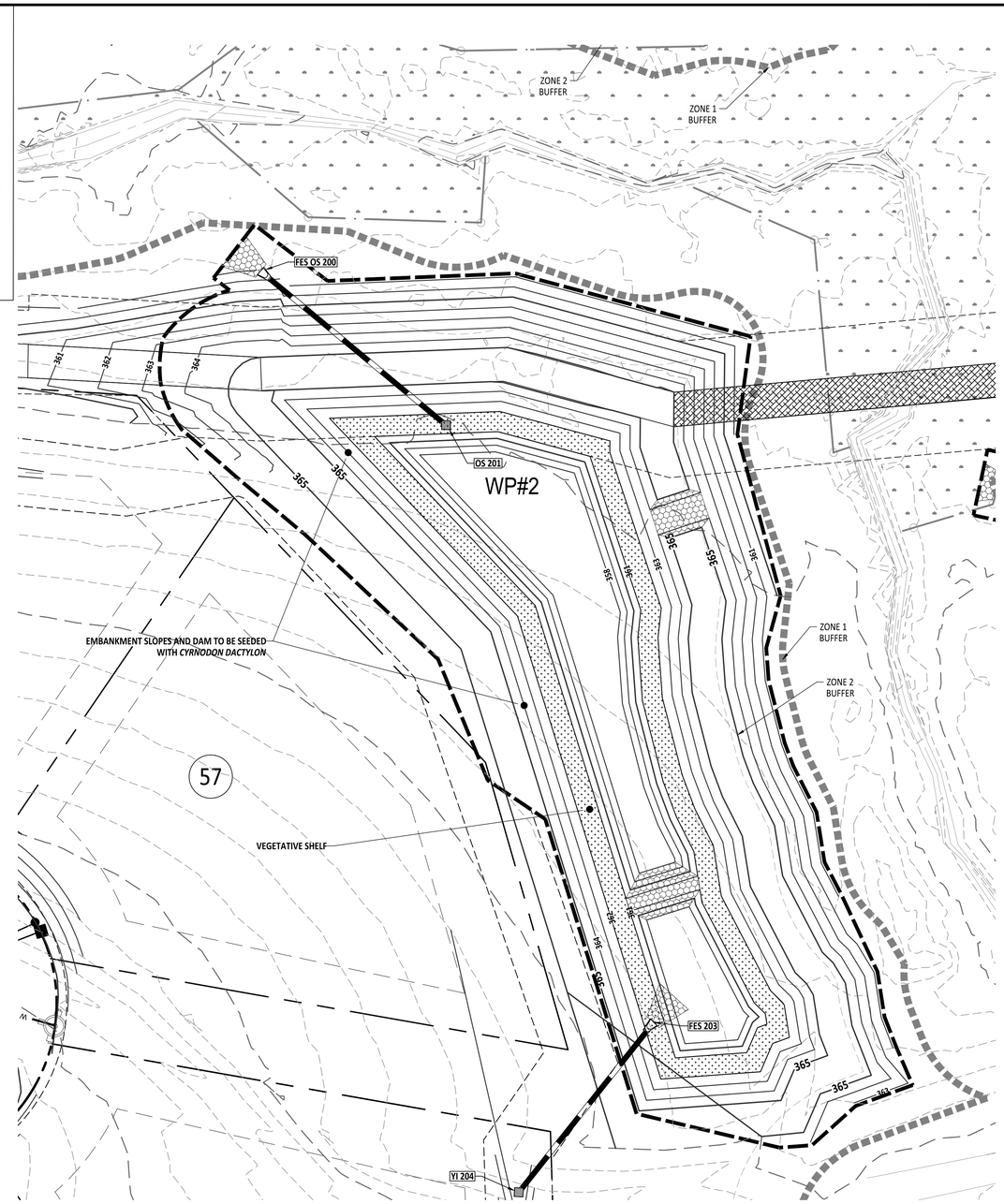

PLANT LIST VEGETATED SHELF PLANT SCHEDULE:

VEGETATED SHELF
(HERB.)

EF	EUPATORUIM FISTRULOSUM	JOE PYE WEED	4-6" POT @ 3' SPACING
HC	HIBICUS COCCINEA	SCARLET ROSE MALLOW	4-6" POT @ 3' SPACING
CG	CHELONE GLABRA	WHITE TURTLEHEAD	4-6" POT @ 3' SPACING
LC	LOBELIA CARDINALIS	CARDINAL FLOWER	4-6" POT @ 3' SPACING

LANDSCAPE PLAN:
VEGETATED SHELF= 3,100 sf (USE 775 PLANTS FROM LIST ABOVE)
USE EQUAL NUMBER OF PLANTS FROM LIST ABOVE

CALCULATION: 50 PLANTS PER 200 SF

GRAPHIC SCALE
20 0 10 20 40 80
(IN FEET)
1 inch = 20

CITY OF RALEIGH - PLANS AUTHORIZED FOR CONSTRUCTION

Electronic Approval: This approval is being issued electronically. This approval is valid only upon the signature of a City of Raleigh Review Officer below. The City will retain a copy of the approved plans. Any work authorized by this approval must proceed in accordance with the plans kept on file with the City. This electronic approval may not be edited once issued. Any modification to this approval once issued will invalidate this approval.

City of Raleigh Development Approval _____

Raleigh Water Review Officer

North Carolina 811
*** 3 Days Before Digging ***
North Carolina 811
811 or 1-800-632-4949
Remote Ticket Entry
http://nc811.org/remoteticketentry.htm

AMERICAN Engineering
American Engineering Associates - Southeast, P.A.
4020 Westchase Boulevard, Suite 450 919-469-1101
Raleigh, NC 27607

NORTH CAROLINA AMERICAN ENGINEERING ASSOCIATES SOUTHEAST C-3883 CERTIFICATE OF AUTHORIZATION

PRELIMINARY DO NOT USE FOR CONSTRUCTION

NORTH CAROLINA PROFESSIONAL ENGINEER SEAL 045361 JACOB P. KLEIN

NO.	DATE	REVISION:

STIPULATION FOR REUSE

THIS DRAWING WAS PREPARED FOR USE ON THE SPECIFIC SITE, NAMED HEREON, CONTEMPORANEOUSLY WITH ITS ISSUE DATE AS LISTED, HEREON. AND IT IS NOT SUITABLE FOR USE ON A DIFFERENT PROJECT SITE OR AT A LATER TIME. USE OF THIS DRAWING FOR REFERENCE OR EXAMPLE ON ANOTHER PROJECT REQUIRES THE SERVICES OF PROPERLY LICENSED ARCHITECTS AND ENGINEERS. REPRODUCTION OF THIS DRAWING FOR REUSE ON ANOTHER PROJECT IS NOT AUTHORIZED AND MAY BE CONTRARY TO THE LAW.

THE PRESERVE AT MOODY FARM
ROLESVILLE ROAD
WAKE COUNTY, NC

JOB NUMBER: 21-002
CHECKED BY: JK
DRAWN BY: RC & SM
DATE: 12/02/2024
SHEET TITLE:
SCM 2
SHEET NO.:
C8.1

December 2, 2024
Z:\Jobs\21-002 Moody Development Trust (R210002)\dwg_Working Dwgs\Construction Set\8.0-8.1 SCM Plan.dwg

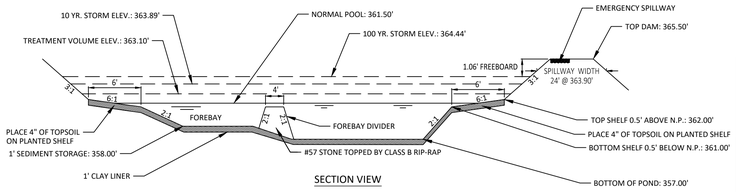

SECTION VIEW

NOTES:
1. SEE SHEET 2.0 FOR SCM CONVERSION SEQUENCE.
2. FOREBAY DIVIDERS ARE TO BE INSTALLED WHILE CONVERTING FROM SEDIMENT BASIN TO WET POND.

01 RETENTION POND
NTS

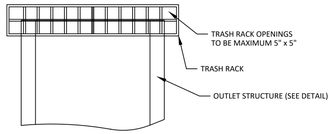

NOTES:
1. TRASH RACK SHALL BE 6" CLEAR OF STRUCTURE TOP AND SIDES. THE TRASH RACK NEED NOT COVER THE TREATMENT OUTLET PIPE.
2. TRASH RACK SHALL BE FASTENED TO EACH SIDE OF THE STRUCTURE AT AT LEAST 2 POINTS. IT SHALL BE EASILY REMOVED FOR MAINTENANCE OR ENTRY INTO THE STRUCTURE.
3. TRASH RACK SHALL ACCOMMODATE VALVE SHAFT THOUGH AN OPENING.
4. TRASH RACK SHALL BE MADE OF DURABLE MATERIAL WHICH WILL NOT RUST OR DETERIORATE IN SUNLIGHT.
5. TOP OF TRASH RACK SHALL HAVE A GRID OF BARS (MAX. 6"x6").

02 TRASH RACK
NTS

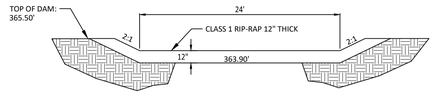

03 EMERGENCY SPILLWAY SECTION
NTS

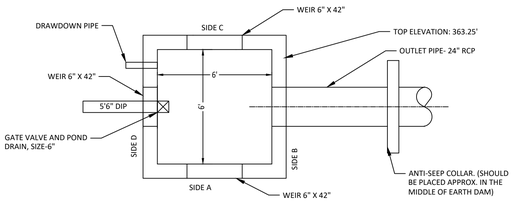

PLAN VIEW

NOTES:
1. WALL THICKNESS AND REINFORCEMENT TO BE DETERMINED BY PRECAST CONCRETE MANUFACTURER.
2. OUTLET STRUCTURE ELEVATIONS SHOWN ON THE DETAILS ON THIS SHEET ARE CRITICAL AND MUST BE WITHIN 0.02' OF THAT SHOWN. IF OUTLET STRUCTURES ARE PRE-CAST OFF-SITE, THE HOLE FOR THE OUTLET PIPE SHALL BE ENLARGED TO ALLOW UP TO 0.3' OF VERTICAL MOVEMENT. WHEN INSTALLED, THE EXCESS OPENING SHALL BE FILLED WITH GROUT.
3. OUTLET PIPES SHALL HAVE AN ANTI-SEEP COLLAR OF CONCRETE LOCATED APPROXIMATELY UNDER THE MIDDLE OF THE DAM IN WHICH IT IS LOCATED. IT SHALL CONSIST OF CONCRETE POURED AROUND THE PIPE IN A VERTICAL DIRECTION. THE COLLAR SHALL BE A SQUARE 8" THICK AND SHALL EXTEND 18" BEYOND THE OUTSIDE OF THE PIPE IN EACH DIRECTION.
4. TREATMENT OUTLET PIPE SHALL NOT BE PVC BUT OTHER MATERIAL SUCH AS GSP WHICH IS NOT SUBJECT TO DETERIORATION IN SUNLIGHT.

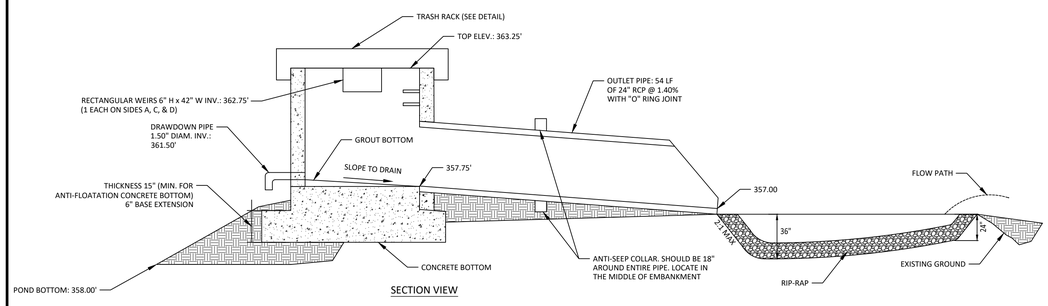

SECTION VIEW

04 OUTLET STRUCTURE #1
NTS

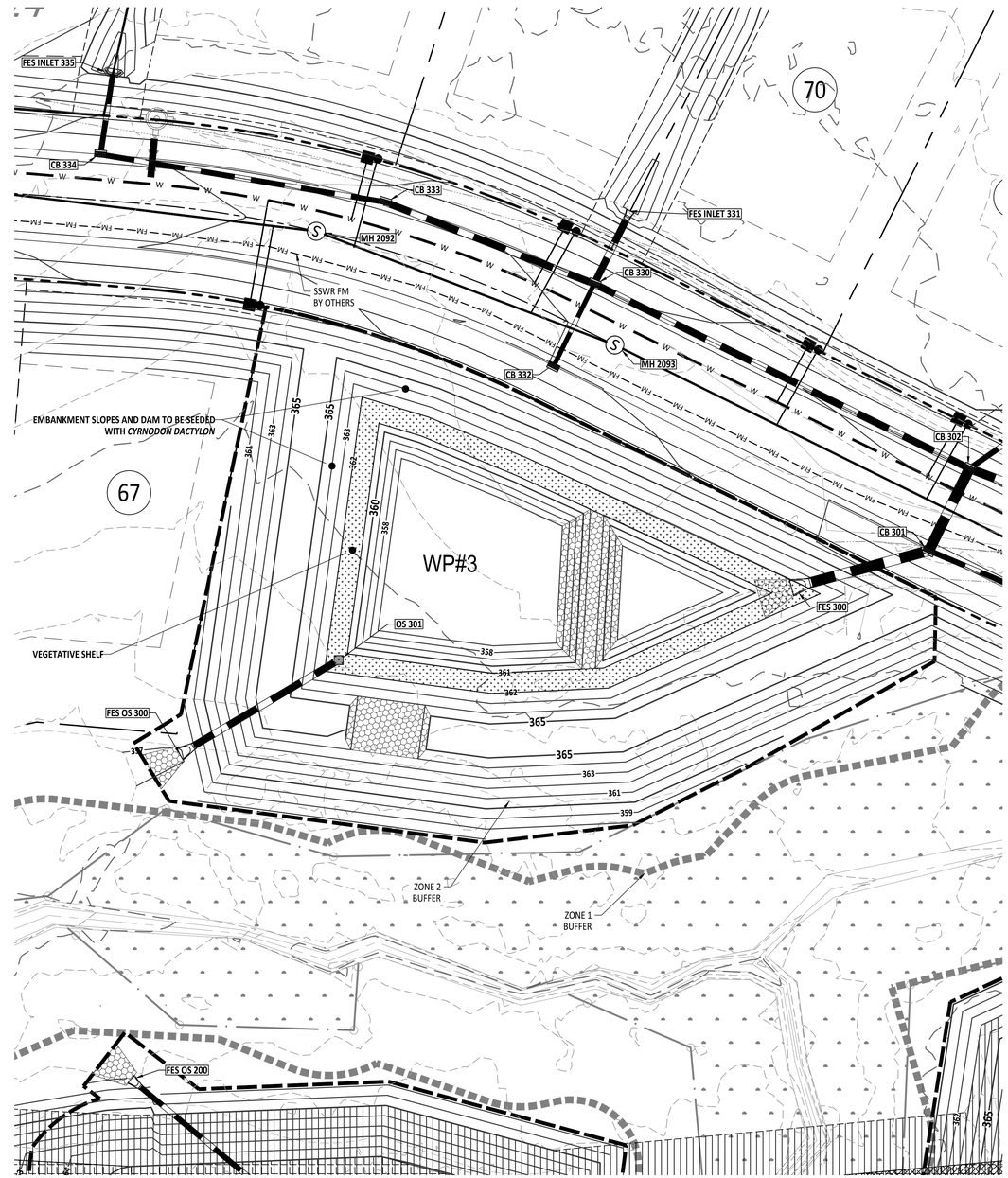

PLANT LIST VEGETATED SHELF PLANT SCHEDULE:

VEGETATED SHELF
(HERB.)

EF	EUPATORUIM FISTRULOSUM	JOE PYE WEED	4-6" POT @ 3' SPACING
HC	HIBICUS COCCINEA	SCARLET ROSE MALLOW	4-6" POT @ 3' SPACING
CG	CHELONE GLABRA	WHITE TURTLEHEAD	4-6" POT @ 3' SPACING
LC	LOBELIA CARDINALIS	CARDINAL FLOWER	4-6" POT @ 3' SPACING

LANDSCAPE PLAN:
VEGETATED SHELF= 2,109 sf (USE 528 PLANTS FROM LIST ABOVE)
USE EQUAL NUMBER OF PLANTS FROM LIST ABOVE

CALCULATION: 50 PLANTS PER 200 SF

GRAPHIC SCALE
20 0 10 20 40 80
(IN FEET)
1 inch = 20

CITY OF RALEIGH - PLANS AUTHORIZED FOR CONSTRUCTION

Electronic Approval: This approval is being issued electronically. This approval is valid only upon the signature of a City of Raleigh Review Officer below. The City will retain a copy of the approved plans. Any work authorized by this approval must proceed in accordance with the plans kept on file with the City. This electronic approval may not be edited once issued. Any modification to this approval once issued will invalidate this approval.

City of Raleigh Development Approval _____

Raleigh Water Review Officer

North Carolina 811
*** 3 Days Before Digging ***
North Carolina 811
811 or 1-800-632-4949
Remote Ticket Entry
http://nc811.org/remoteticketentry.htm

AMERICAN Engineering
American Engineering Associates - Southeast, P.A.
4020 Westchase Boulevard, Suite 450
Raleigh, NC 27607
919-469-1101

NORTH CAROLINA
AMERICAN ENGINEERING ASSOCIATES SOUTHEAST
C-3881
CERTIFICATE OF AUTHORIZATION

PRELIMINARY
DO NOT USE FOR CONSTRUCTION
NORTH CAROLINA PROFESSIONAL ENGINEER SEAL
JACOB P. KLEIN
Digitally signed by Jacob P. Klein
DN: cn=Jacob P. Klein, o=AMERICAN Engineering, ou=Engineering, email=jklein@amerengineering.com, c=US
2024.12.02 09:42:00 -05'00'

NO.	DATE	REVISION:

STIPULATION FOR REUSE

THIS DRAWING WAS PREPARED FOR USE ON THE SPECIFIC SITE, NAMED HEREON, CONTEMPORANEOUSLY WITH ITS ISSUE DATE AS LISTED, HEREON, AND IT IS NOT SUITABLE FOR USE ON A DIFFERENT PROJECT SITE OR AT A LATER TIME. USE OF THIS DRAWING FOR REFERENCE OR EXAMPLE ON ANOTHER PROJECT REQUIRES THE SERVICES OF PROPERLY LICENSED ARCHITECTS AND ENGINEERS. REPRODUCTION OF THIS DRAWING FOR REUSE ON ANOTHER PROJECT IS NOT AUTHORIZED AND MAY BE CONTRARY TO THE LAW.

THE PRESERVE AT MOODY FARM
ROLESVILLE ROAD
WAKE COUNTY, NC

JOB NUMBER: 21-002
CHECKED BY: JK
DRAWN BY: RC & SM
DATE: 12/02/2024

SHEET TITLE:
SCM 3

SHEET NO.:
C8.2

December 2, 2024
Z:\Jobs\21-002 Moody Development Trust (R21000210)\dwg_Working Dwgs\Construction Set\C8.8.1 SCM Plan.dwg

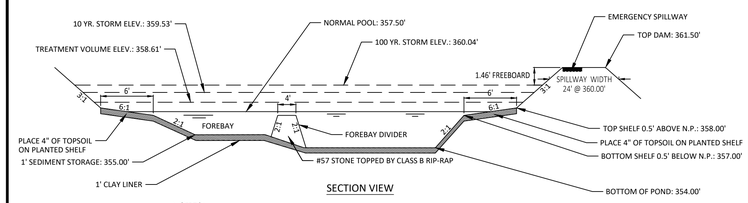

SECTION VIEW

NOTES:
1. SEE SHEET 2.0 FOR SCM CONVERSION SEQUENCE.
2. FOREBAY DIVIDERS ARE TO BE INSTALLED WHILE CONVERTING FROM SEDIMENT BASIN TO WET POND.

01 RETENTION POND
NTS

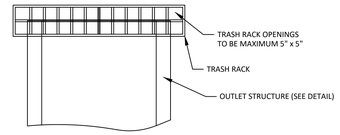

NOTES:
1. TRASH RACK SHALL BE 6" CLEAR OF STRUCTURE TOP AND SIDES. THE TRASH RACK NEED NOT COVER THE TREATMENT OUTLET PIPE.
2. TRASH RACK SHALL BE FASTENED TO EACH SIDE OF THE STRUCTURE AT AT LEAST 2 POINTS. IT SHALL BE EASILY REMOVED FOR MAINTENANCE OR ENTRY INTO THE STRUCTURE.
3. TRASH RACK SHALL ACCOMMODATE VALVE SHAFT THOUGH AN OPENING.
4. TRASH RACK SHALL BE MADE OF DURABLE MATERIAL WHICH WILL NOT RUST OR DETERIORATE IN SUNLIGHT.
5. TOP OF TRASH RACK SHALL HAVE A GRID OF BARS (MAX. 6"x6").

02 TRASH RACK
NTS

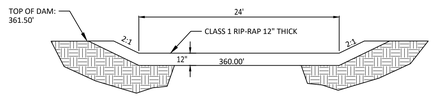

03 EMERGENCY SPILLWAY SECTION
NTS

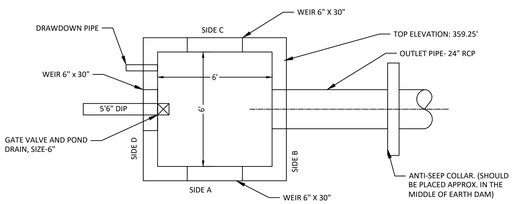

PLAN VIEW

NOTES:
1. WALL THICKNESS AND REINFORCEMENT TO BE DETERMINED BY PRECAST CONCRETE MANUFACTURER.
2. OUTLET STRUCTURE ELEVATIONS SHOWN ON THE DETAILS ON THIS SHEET ARE CRITICAL AND MUST BE WITHIN 0.02' OF THAT SHOWN. IF OUTLET STRUCTURES ARE PRE-CAST OFF-SITE, THE HOLE FOR THE OUTLET PIPE SHALL BE ENLARGED TO ALLOW UP TO 0.3' OF VERTICAL MOVEMENT. WHEN INSTALLED, THE EXCESS OPENING SHALL BE FILLED WITH GROUT.
3. OUTLET PIPES SHALL HAVE AN ANTI-SEEP COLLAR OF CONCRETE LOCATED APPROXIMATELY UNDER THE MIDDLE OF THE DAM IN WHICH IT IS LOCATED. IT SHALL CONSIST OF CONCRETE POURED AROUND THE PIPE IN A VERTICAL DIRECTION. THE COLLAR SHALL BE A SQUARE 8" THICK AND SHALL EXTEND 18" BEYOND THE OUTSIDE OF THE PIPE IN EACH DIRECTION.
4. TREATMENT OUTLET PIPE SHALL NOT BE PVC BUT OTHER MATERIAL SUCH AS GSP WHICH IS NOT SUBJECT TO DETERIORATION IN SUNLIGHT.

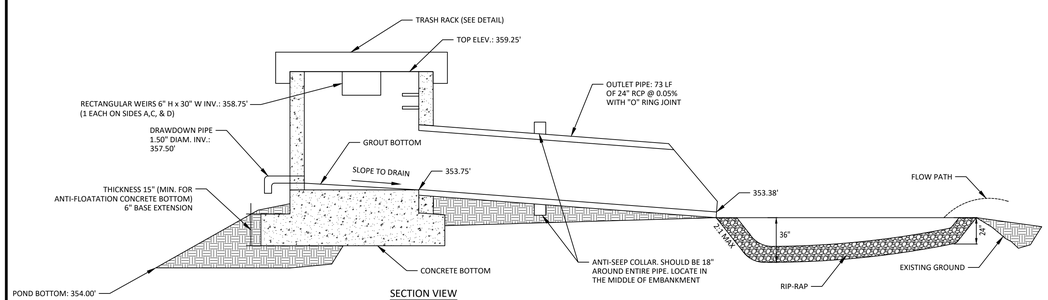

SECTION VIEW

04 OUTLET STRUCTURE #1
NTS

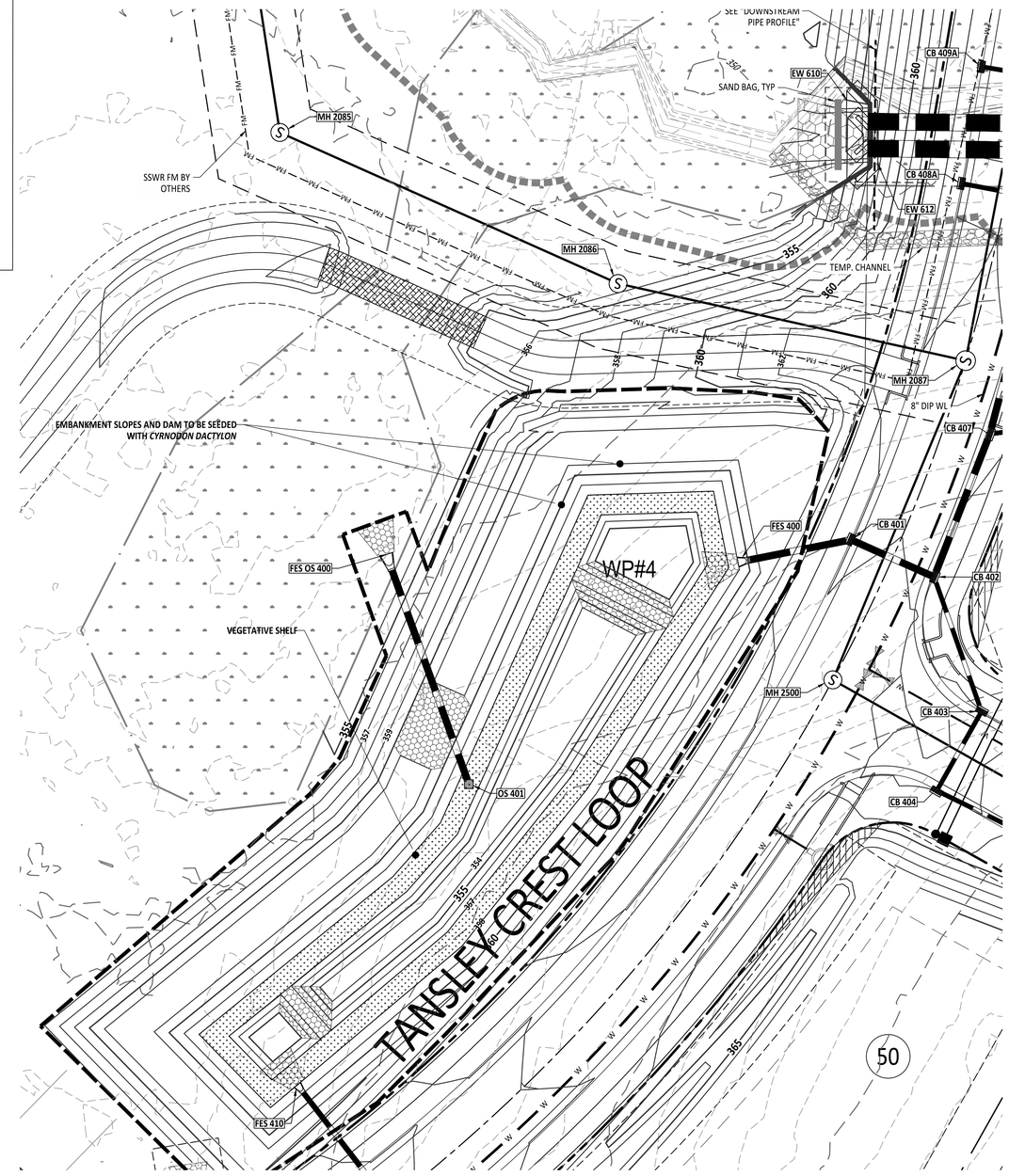

PLANT LIST VEGETATED SHELF PLANT SCHEDULE:

VEGETATED SHELF (HERB.)

EF	EUPATORUIM FISTRULOSUM	JOE PYE WEED	4-6" POT @ 3' SPACING
HC	HIBICUS COCCINEA	SCARLET ROSE MALLOW	4-6" POT @ 3' SPACING
CG	CHELONE GLABRA	WHITE TURTLEHEAD	4-6" POT @ 3' SPACING
LC	LOBELIA CARDINALIS	CARDINAL FLOWER	4-6" POT @ 3' SPACING

LANDSCAPE PLAN:

VEGETATED SHELF= 2,890 sf (USE 723 PLANTS FROM LIST ABOVE)
USE EQUAL NUMBER OF PLANTS FROM LIST ABOVE

CALCULATION: 50 PLANTS PER 200 SF

GRAPHIC SCALE

20 0 10 20 40 80

(IN FEET)
1 inch = 20

CITY OF RALEIGH - PLANS AUTHORIZED FOR CONSTRUCTION

Electronic Approval: This approval is being issued electronically. This approval is valid only upon the signature of a City of Raleigh Review Officer below. The City will retain a copy of the approved plans. Any work authorized by this approval must proceed in accordance with the plans kept on file with the City. This electronic approval may not be edited once issued. Any modification to this approval once issued will invalidate this approval.

City of Raleigh Development Approval _____

Raleigh Water Review Officer

North Carolina 811 — Call before you dig.
*** 3 Days Before Digging ***
North Carolina 811
811 or 1-800-632-4949
Remote Ticket Entry
http://nc811.org/remoteticketentry.htm

AMERICAN Engineering
American Engineering Associates - Southeast, P.A.
4020 Westchase Boulevard, Suite 450
Raleigh, NC 27607
919-469-1101

NORTH CAROLINA AMERICAN ENGINEERING ASSOCIATES SOUTHEAST C-3881 CERTIFICATE OF AUTHORIZATION

PRELIMINARY NOT FOR CONSTRUCTION
NORTH CAROLINA PROFESSIONAL ENGINEER SEAL 19681
JACOB P. KLEIN
Digitally signed by Jacob Klein
DN: cn=Jacob Klein, o=AMERICAN ENGINEERING ASSOCIATES, ou=, email=jklein@aeasoutheast.com, c=US
Date: 2024.12.02 15:32:32 -05'00'

NO.	DATE	REVISION:

STIPULATION FOR REUSE

THIS DRAWING WAS PREPARED FOR USE ON THE SPECIFIC SITE, NAMED HEREON, CONTEMPORANEOUSLY WITH ITS ISSUE DATE AS LISTED, HEREON, AND IT IS NOT SUITABLE FOR USE ON A DIFFERENT PROJECT SITE OR AT A LATER TIME. USE OF THIS DRAWING FOR REFERENCE OR EXAMPLE ON ANOTHER PROJECT REQUIRES THE SERVICES OF PROPERLY LICENSED ARCHITECTS AND ENGINEERS. REPRODUCTION OF THIS DRAWING FOR REUSE ON ANOTHER PROJECT IS NOT AUTHORIZED AND MAY BE CONTRARY TO THE LAW.

THE PRESERVE AT MOODY FARM

ROLESVILLE ROAD
WAKE COUNTY, NC

JOB NUMBER: 21-002
CHECKED BY: JK
DRAWN BY: RC & SM
DATE: 12/02/2024

SHEET TITLE:

SCM 4

SHEET NO.:

C8.3

December 2, 2024
Z:\Jobs\21-002 Moody Development Tract (B21000031\dwg_Working Dwgs\Construction Set\C8.0 & 1 SCM Plan.dwg

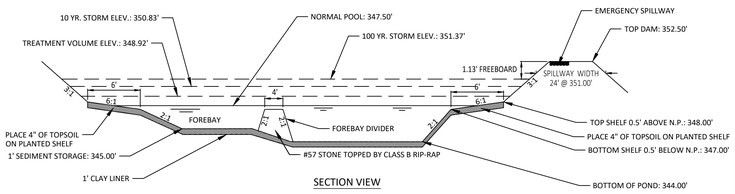

NOTES:
1. SEE SHEET 2.0 FOR SCM CONVERSION SEQUENCE.
2. FOREBAY DIVIDERS ARE TO BE INSTALLED WHILE CONVERTING FROM SEDIMENT BASIN TO WET POND.

01 RETENTION POND
NTS

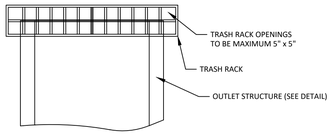

NOTES:
1. TRASH RACK SHALL BE 6" CLEAR OF STRUCTURE TOP AND SIDES. THE TRASH RACK NEED NOT COVER THE TREATMENT OUTLET PIPE.
2. TRASH RACK SHALL BE FASTENED TO EACH SIDE OF THE STRUCTURE AT AT LEAST 2 POINTS. IT SHALL BE EASILY REMOVED FOR MAINTENANCE OR ENTRY INTO THE STRUCTURE.
3. TRASH RACK SHALL ACCOMMODATE VALVE SHAFT THOUGH AN OPENING.
4. TRASH RACK SHALL BE MADE OF DURABLE MATERIAL WHICH WILL NOT RUST OR DETERIORATE IN SUNLIGHT.
5. TOP OF TRASH RACK SHALL HAVE A GRID OF BARS (MAX. 6"x6").

02 TRASH RACK
NTS

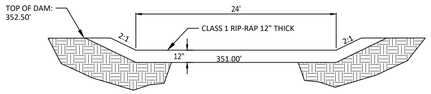

03 EMERGENCY SPILLWAY SECTION
NTS

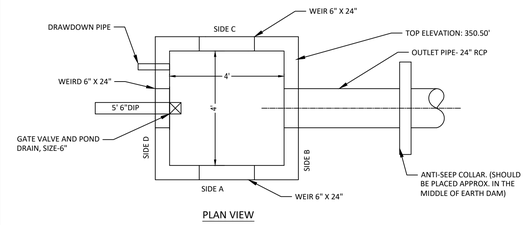

NOTES:
1. WALL THICKNESS AND REINFORCEMENT TO BE DETERMINED BY PRECAST CONCRETE MANUFACTURER.
2. OUTLET STRUCTURE ELEVATIONS SHOWN ON THE DETAILS ON THIS SHEET ARE CRITICAL AND MUST BE WITHIN 0.02' OF THAT SHOWN. IF OUTLET STRUCTURES ARE PRE-CAST OFF-SITE, THE HOLE FOR THE OUTLET PIPE SHALL BE ENLARGED TO ALLOW UP TO 0.3' OF VERTICAL MOVEMENT. WHEN INSTALLED, THE EXCESS OPENING SHALL BE FILLED WITH GROUT.
3. OUTLET PIPES SHALL HAVE AN ANTI-SEEP COLLAR OF CONCRETE LOCATED APPROXIMATELY UNDER THE MIDDLE OF THE DAM IN WHICH IT IS LOCATED. IT SHALL CONSIST OF CONCRETE POURED AROUND THE PIPE IN A VERTICAL DIRECTION. THE COLLAR SHALL BE A SQUARE 8" THICK AND SHALL EXTEND 18" BEYOND THE OUTSIDE OF THE PIPE IN EACH DIRECTION.
4. TREATMENT OUTLET PIPE SHALL NOT BE PVC BUT OTHER MATERIAL SUCH AS GSP WHICH IS NOT SUBJECT TO DETERIORATION IN SUNLIGHT.

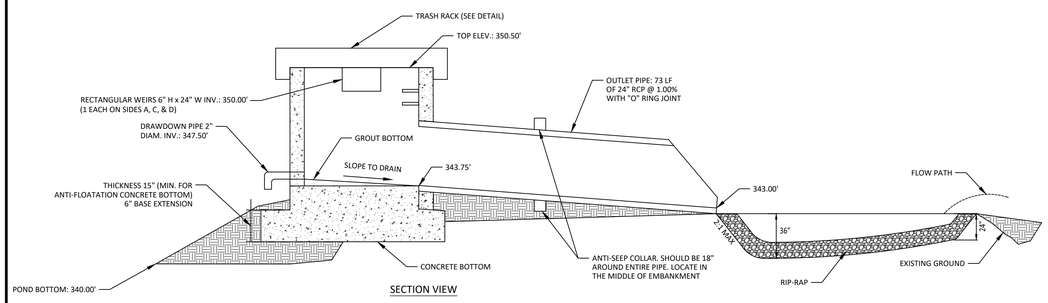

04 OUTLET STRUCTURE #1
NTS

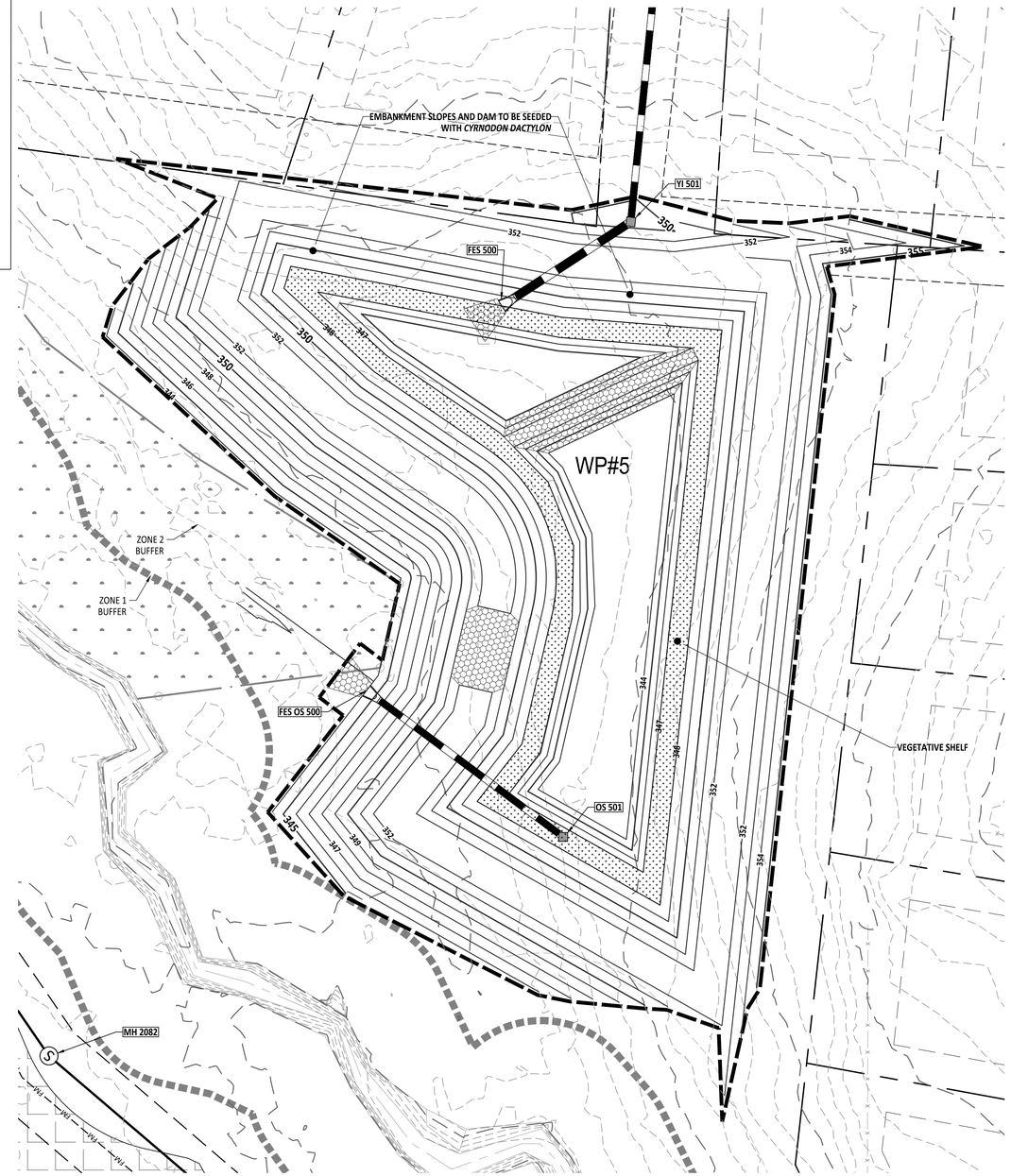

PLANT LIST VEGETATED SHELF PLANT SCHEDULE:

VEGETATED SHELF (HERB.)

EF	EUPATORUIM FISTRULOSUM	JOE PYE WEED	4-6" POT @ 3' SPACING
HC	HIBICUS COCCINEA	SCARLET ROSE MALLOW	4-6" POT @ 3' SPACING
CG	CHELONE GLABRA	WHITE TURTLEHEAD	4-6" POT @ 3' SPACING
LC	LOBELIA CARDINALIS	CARDINAL FLOWER	4-6" POT @ 3' SPACING

LANDSCAPE PLAN:

VEGETATED SHELF= 3172 sf (USE 793 PLANTS FROM LIST ABOVE)
USE EQUAL NUMBER OF PLANTS FROM LIST ABOVE

CALCULATION: 50 PLANTS PER 200 SF

GRAPHIC SCALE

20 0 10 20 40 80

(IN FEET)
1 inch = 20

CITY OF RALEIGH - PLANS AUTHORIZED FOR CONSTRUCTION

Electronic Approval: This approval is being issued electronically. This approval is valid only upon the signature of a City of Raleigh Review Officer below. The City will retain a copy of the approved plans. Any work authorized by this approval must proceed in accordance with the plans kept on file with the City. This electronic approval may not be edited once issued. Any modification to this approval once issued will invalidate this approval.

City of Raleigh Development Approval _____

Raleigh Water Review Officer

North Carolina 811

*** 3 Days Before Digging ***
North Carolina 811
811 or 1-800-632-4949
Remote Ticket Entry
http://nc811.org/remoteticketentry.htm

AMERICAN Engineering
American Engineering Associates - Southeast, P.A.
4020 Westchase Boulevard, Suite 450
Raleigh, NC 27607
919-469-1101

NORTH CAROLINA AMERICAN ENGINEERING ASSOCIATES SOUTHEAST C-3881 CERTIFICATE OF AUTHORIZATION

PRELIMINARY NOT FOR CONSTRUCTION

NORTH CAROLINA PROFESSIONAL ENGINEER SEAL 045268 JACOB P. KLEIN

Digitally signed by Jacob Klein
DN: cn=Jacob Klein, o=AMERICAN ENGINEERING ASSOCIATES SOUTHEAST, ou=Engineering, email=jklein@aeasoutheast.com, c=US
Date: 2024.12.02 15:42:52 -05'00'

NO.	DATE	REVISION:

STIPULATION FOR REUSE

THIS DRAWING WAS PREPARED FOR USE ON THE SPECIFIC SITE, NAMED HEREON, CONTEMPORANEOUSLY WITH ITS ISSUE DATE AS LISTED, HEREON, AND IT IS NOT SUITABLE FOR USE ON A DIFFERENT PROJECT SITE OR AT A LATER TIME. USE OF THIS DRAWING FOR REFERENCE OR EXAMPLE ON ANOTHER PROJECT REQUIRES THE SERVICES OF PROPERLY LICENSED ARCHITECTS AND ENGINEERS. REPRODUCTION OF THIS DRAWING FOR REUSE ON ANOTHER PROJECT IS NOT AUTHORIZED AND MAY BE CONTRARY TO THE LAW.

THE PRESERVE AT MOODY FARM
ROLESVILLE ROAD
WAKE COUNTY, NC

JOB NUMBER: 21-002
CHECKED BY: JK
DRAWN BY: RC & SM
DATE: 12/02/2024

SHEET TITLE:
SCM 5

SHEET NO.:
C8.4

December 2, 2024

Z:\Jobs\21-002 Moody Development Tract (R21002)\Dwg_Working Dwgs\Construction Set\8.0 & 5 SCM Plan.dwg

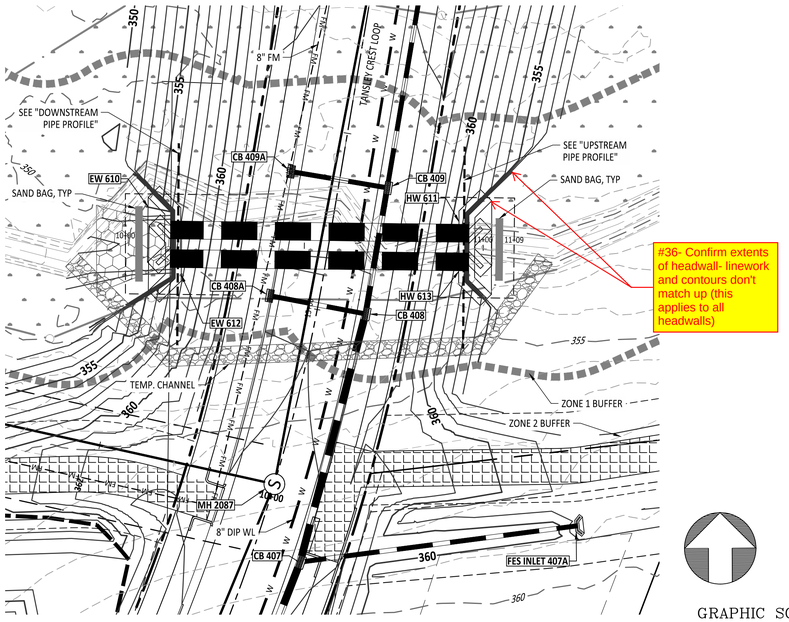

CULVERT CROSSING PLAN

GRAPHIC SCALE

(IN FEET)
1 inch = 20

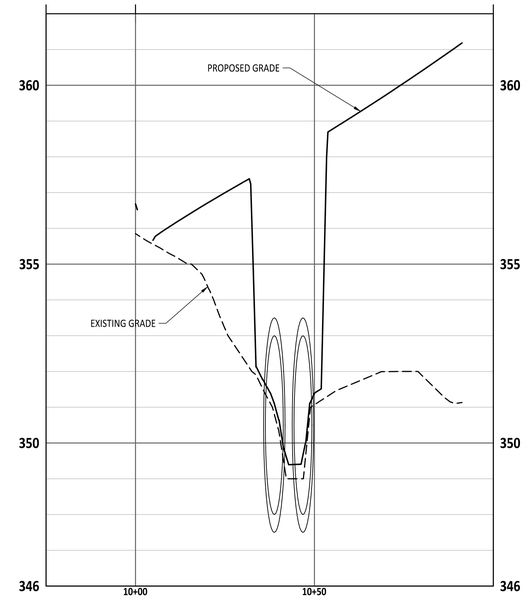

CULVERT CROSSING - UPSTREAM PIPE PROFILE

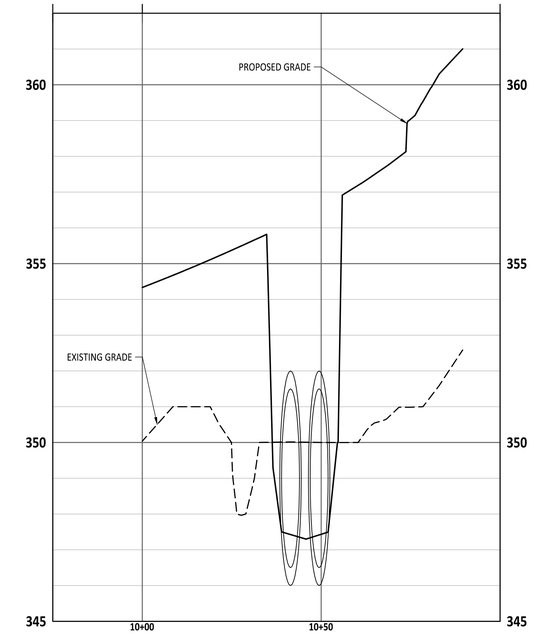

CULVERT CROSSING - DOWNSTREAM PIPE PROFILE

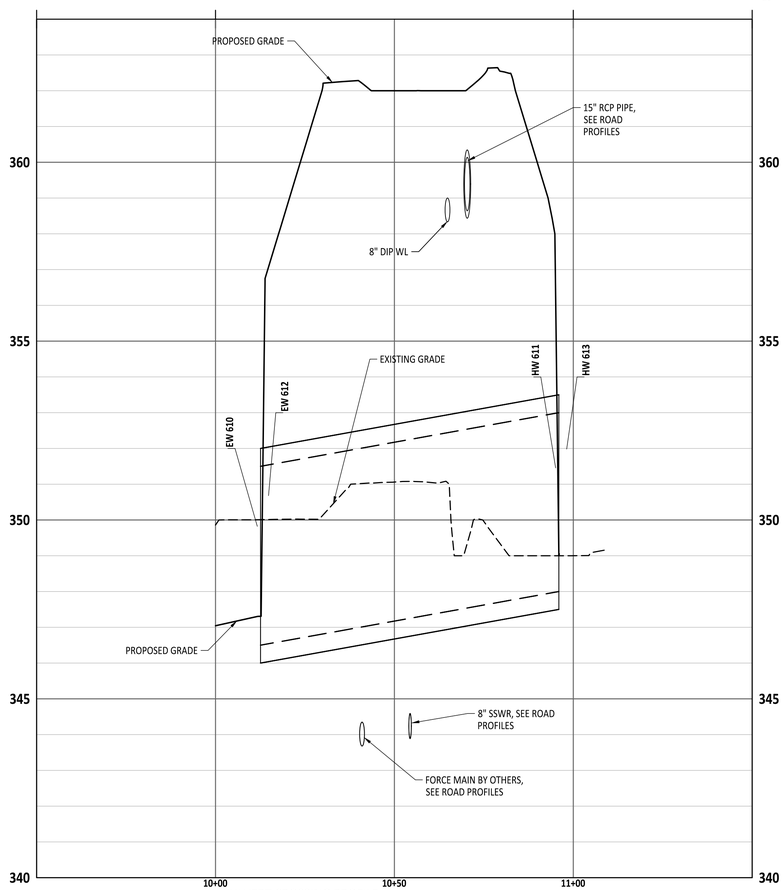

CULVERT CROSSING PROFILE

SEQUENCE FOR 60" RCP CULVERT CROSSING

STAGE 1A CREEK CROSSING INSTALLATION

1. CONDUCT MEETING WITH WAKE COUNTY INSPECTOR PRIOR TO PROCEEDING WITH THE STREAM CROSSING CONSTRUCTION.
2. INSTALL THE BYPASS CHANNEL AS SHOWN WITH LINING LEAVING A PORTION OF THE STREAM BANK ON EACH END TO ACT AS A DAM TO PREVENT WATER FLOW DURING CONSTRUCTION OF THE CHANNEL. **(STEPS 3 - 8 SHOULD BE ACCOMPLISHED DURING ONE WORKDAY).**
3. DURING A PERIOD OF DRY WEATHER REMOVE THE DOWNSTREAM DAM FIRST AND CONSTRUCT THE REMAINDER OF THE CHANNEL TO THE EXISTING STREAM BED.
4. REMOVE THE UPSTREAM DAM AND CONSTRUCT THE REMAINDER OF THE CHANNEL ON THAT END INCLUDING LINING.
5. ADD SANDBAGS ACROSS THE STREAM AT THE UPSTREAM END TO FORCE THE STREAM FLOW INTO THE BY-PASS CHANNEL.
6. ADD SANDBAGS ACROSS THE DOWNSTREAM END OF THE STREAM JUST ABOVE THE POINT WHERE THE BY-PASS CHANNEL RE-ENTERS THE STREAM TO PREVENT FLOW INTO THE LOCATION OF THE PIPE TO BE INSTALLED.
7. RELOCATE BRIDGE MAT OVER THE TEMPORARY BY-PASS CHANNEL.
8. SEED/SOD AND STABILIZE ALL DENUDED AREAS ONCE THE CHANNEL IS IN PLACE.

STAGE 1B CREEK CROSSING INSTALLATION

1. OBTAIN PERMISSION FROM THE WAKE COUNTY INSPECTOR TO PROCEED WITH THIS STEP.
2. EXCAVATE AREA AS SHOWN AND INSTALL PIPE WITH HEADWALLS AND DOWNSTREAM RIP RAP AS SHOWN IN RIP-RAP CROSS-SECTION.
3. OBTAIN WAKE COUNTY APPROVAL OF THE PIPE INSTALLATION.

STAGE 1C CREEK CROSSING INSTALLATION

1. REMOVE TEMPORARY DAM ON DOWNSTREAM END.
2. REMOVE TEMPORARY DAM ON UPSTREAM END.
3. REMOVE LINING ON UPSTREAM END OF BY-PASS CHANNEL AND INSTALL EARTHEN DAM ACROSS THE UPSTREAM END OF THE BY-PASS CHANNEL TO FORCE STREAM FLOW THROUGH THE PIPE.
4. INSTALL EARTHEN DAM ACROSS THE DOWNSTREAM OF THE BY-PASS CHANNEL AFTER REMOVING THE LINING.
5. REMOVE REMAINDER OF THE BY-PASS CHANNEL LINING AND FILL THE CHANNEL COMPACTING THOROUGHLY IN LAYERS.
6. INSTALL SILT FENCE AT THE TOE OF SLOPES AND TIE TO ENDWALLS AS SHOWN ON THIS PLAN.
7. COMPLETE FILL AROUND THE PIPE TO A LEVEL AT LEAST TWO (2) FEET ABOVE THE TOP OF THE PIPE TO ALLOW CONSTRUCTION EQUIPMENT TO PASS OVER IT.
8. COMPLETE FILL BRINGING THE AREA TO FINISHED GRADE.
9. INSTALL PAVEMENT AND FOLLOW THE SEEDING SCHEDULE FOR ALL BARE AREAS.
10. REFER TO MAIN CONSTRUCTION SEQUENCE FOR OTHER DETAILS.

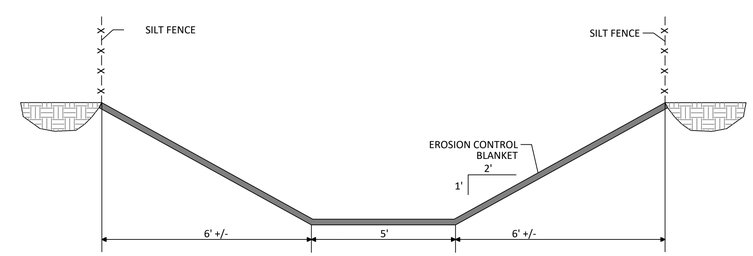

TEMPORARY CHANNEL SECTION

GENERAL NOTES

1. ALL CONSTRUCTION SHALL BE IN ACCORDANCE WITH WAKE COUNTY STANDARDS AND REGULATIONS.
2. THERE SHALL BE NO DISTURBANCE OUTSIDE THE LIMITS SHOWN ON THIS PLAN WITHOUT AN APPROVED PLAN AMENDMENT BY WAKE COUNTY.
3. ALL DISTURBED AREAS SHALL BE SEEDED PER THE TABLE.
4. PERMANENT GROUND COVER SHALL BE ESTABLISHED PER NPDES SEEDING SCHEDULE AT EITHER 7 DAYS OR 14 DAYS DEPENDING ON MEASURE AND SLOPE.
5. CONTRACTOR IS RESPONSIBLE FOR MAINTAINING SELF-INSPECTION LOG.
6. CUT AND FILL SLOPES THAT ARE 2:1 OR GREATER SHALL BE STABILIZED WITH PERMANENT SLOPE RETENTION DEVICES OR A SUITABLE COMBINATION OF PLANTING AND RETENTION DEVICES. SLOPES GREATER THAN 3:1 SHALL NOT BE STABILIZED WITH TURF GRASS BUT MUST BE STABILIZED WITH VEGETATION THAT REQUIRES MINIMAL MAINTENANCE: WEEPING LOVE GRASS, RED FESCUE, OR OTHER APPROVED VARIETY.

CITY OF RALEIGH - PLANS AUTHORIZED FOR CONSTRUCTION

Electronic Approval: This approval is being issued electronically. This approval is valid only upon the signature of a City of Raleigh Review Officer below. The City will retain a copy of the approved plans. Any work authorized by this approval must proceed in accordance with the plans kept on file with the City. This electronic approval may not be edited once issued. Any modification to this approval once issued will invalidate this approval.

City of Raleigh Development Approval _____

Raleigh Water Review Officer

North Carolina 811 Call 811 Before You Dig

*** 3 Days Before Digging ***
North Carolina 811
811 or 1-800-632-4949
Remote Ticket Entry
http://nc811.org/remoteticketentry.htm

AMERICAN Engineering
American Engineering Associates - Southeast, P.A.
4020 Westchase Boulevard, Suite 450
Raleigh, NC 27607
919-469-1101

NORTH CAROLINA AMERICAN ENGINEERING ASSOCIATES SOUTHEAST C-3881 CERTIFICATE OF AUTHORIZATION

PRELIMINARY DO NOT USE FOR CONSTRUCTION

NORTH CAROLINA PROFESSIONAL ENGINEER SEAL 19681 JACOB P. KLEIN

Digitally signed by Jacob P. Klein DN: cn=Jacob P. Klein, o=AMERICAN ENGINEERING ASSOCIATES SOUTHEAST, ou=Engineering, c=US, email=jklein@aeasoutheast.com Date: 2024.12.02 15:20:00 -05'00'

NO.	DATE	REVISION:

STIPULATION FOR REUSE

THIS DRAWING WAS PREPARED FOR USE ON THE SPECIFIC SITE, NAMED HEREON, CONTEMPORANEOUSLY WITH ITS ISSUE DATE AS LISTED, HEREON. AND IT IS NOT SUITABLE FOR USE ON A DIFFERENT PROJECT SITE OR AT A LATER TIME. USE OF THIS DRAWING FOR REFERENCE OR EXAMPLE ON ANOTHER PROJECT REQUIRES THE SERVICES OF PROPERLY LICENSED ARCHITECTS AND ENGINEERS. REPRODUCTION OF THIS DRAWING FOR REUSE ON ANOTHER PROJECT IS NOT AUTHORIZED AND MAY BE CONTRARY TO THE LAW.

THE PRESERVE AT MOODY FARM

ROLESVILLE ROAD
WAKE COUNTY, NC

JOB NUMBER: 21-002
CHECKED BY: JK
DRAWN BY: RC & SM
DATE: 12/02/2024

SHEET TITLE:

CULVERT CROSSING

SHEET NO.: **C8.5**

Z:\Jobs\21-002 Moody Development Tract (R21000310Avg)_Working Dwgs\Construction Set\8.0 & 1 SOM Plan.dwg

December 2, 2024

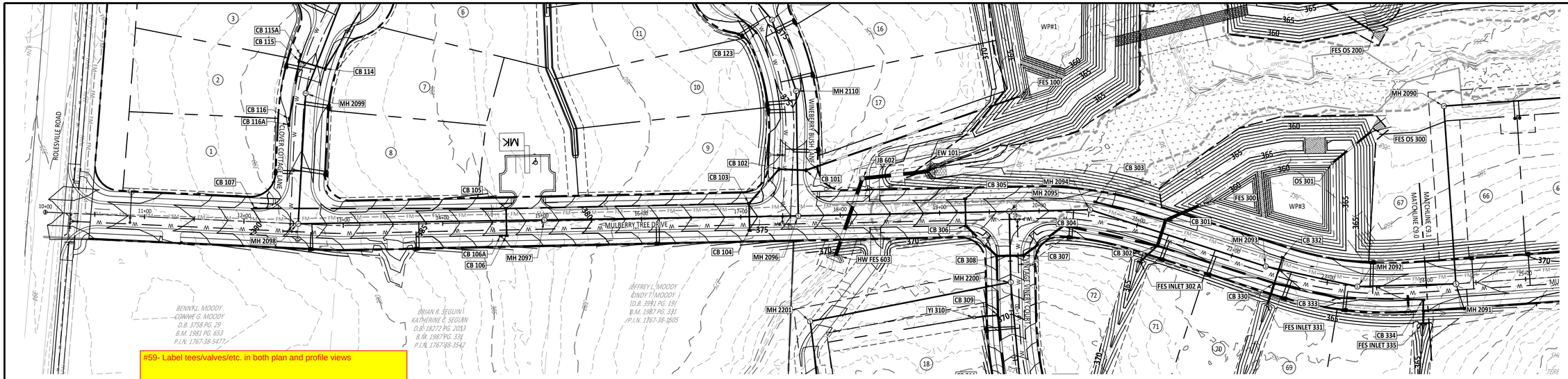

#59- Label tees/valves/etc. in both plan and profile views

#60- Ensure the elevations at tees line up across profiles

MULBERRY TREE DRIVE PLAN

GRAPHIC SCALE

(IN FEET)
1 inch = 50

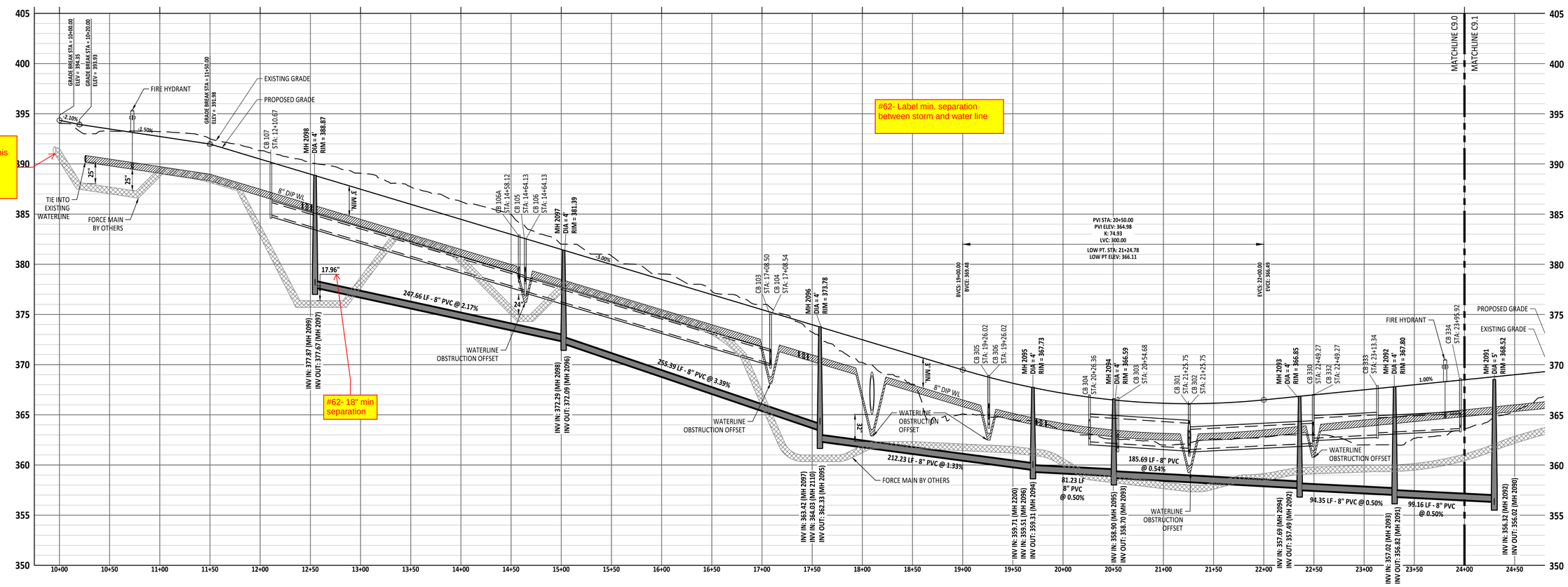

#61- Force main does not extend this far on plan view, ensure plan and profile accurately reflect each other

#62- Label min. separation between storm and water line

#62- 18" min separation

MULBERRY TREE DRIVE PROFILE

CITY OF RALEIGH - PLANS AUTHORIZED FOR CONSTRUCTION

Electronic Approval: This approval is being issued electronically. This approval is valid only upon the signature of a City of Raleigh Review Officer below. The City will retain a copy of the approved plans. Any work authorized by this approval must proceed in accordance with the plans kept on file with the City. This electronic approval may not be edited once issued. Any modification to this approval once issued will invalidate this approval.

City of Raleigh Development Approval _____

Raleigh Water Review Officer

North Carolina 811

*** 3 Days Before Digging ***
North Carolina 811
811 or 1-800-632-4949
Remote Ticket Entry
http://nc811.org/remoteticketentry.htm

AMERICAN Engineering
American Engineering Associates - Southeast, P.A.
4020 Westchase Boulevard, Suite 450
Raleigh, NC 27607
919-469-1101

NORTH CAROLINA
AMERICAN ENGINEERING ASSOCIATES SOUTHEAST
C-3881
CERTIFICATE OF AUTHORIZATION

PRELIMINARY
NOT FOR CONSTRUCTION
NORTH CAROLINA
JAKOB P. KEEN
Jakob P. Keen, Jr. P.E.
30 Sept. 2024
Date

NO.	DATE	REVISION:

STIPULATION FOR REUSE

THIS DRAWING WAS PREPARED FOR USE ON THE SPECIFIC SITE, NAMED HEREON, CONTEMPORANEOUSLY WITH ITS ISSUE DATE AS LISTED, HEREON, AND IT IS NOT SUITABLE FOR USE ON A DIFFERENT PROJECT SITE OR AT A LATER TIME. USE OF THIS DRAWING FOR REFERENCE OR EXAMPLE ON ANOTHER PROJECT REQUIRES THE SERVICES OF PROPERLY LICENSED ARCHITECTS AND ENGINEERS. REPRODUCTION OF THIS DRAWING FOR REUSE ON ANOTHER PROJECT IS NOT AUTHORIZED AND MAY BE CONTRARY TO THE LAW.

THE PRESERVE AT MOODY FARM
ROLESVILLE ROAD
WAKE COUNTY, NC

JOB NUMBER: 21-002
CHECKED BY: JK
DRAWN BY: RC & SM
DATE: 12/02/2024

SHEET TITLE:
MULBERRY PLAN AND PROFILE

SHEET NO.:
C9.0

Z:\Jobs\21-003 Moody Development Tract (R21002)\Dwg_Working Dwgs\Construction Set\9.0- 9.1 Mulberry Plan and Profiles.dwg December 2, 2024

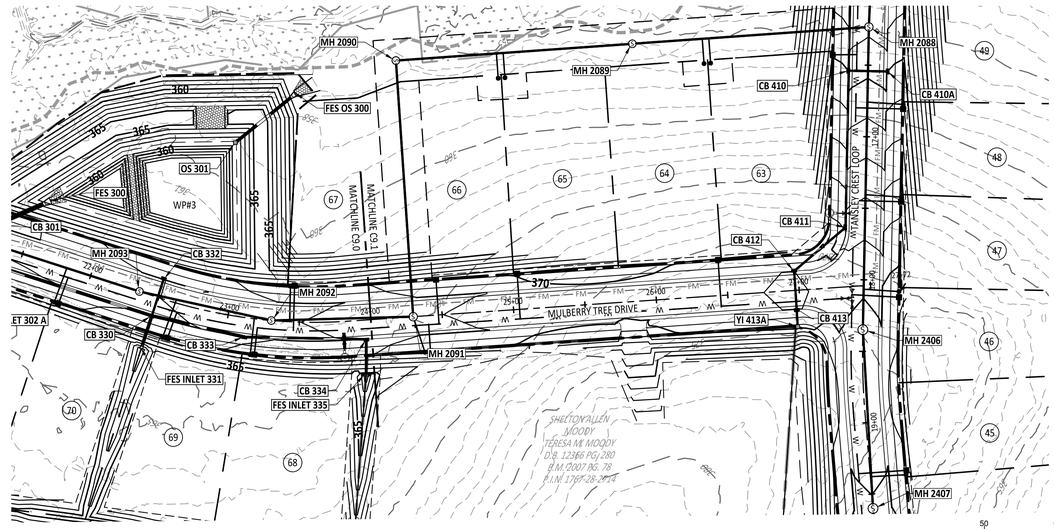

MULBERRY TREE DRIVE PLAN

GRAPHIC SCALE

50 0 25 50 100 200

(IN FEET)
1 inch = 50

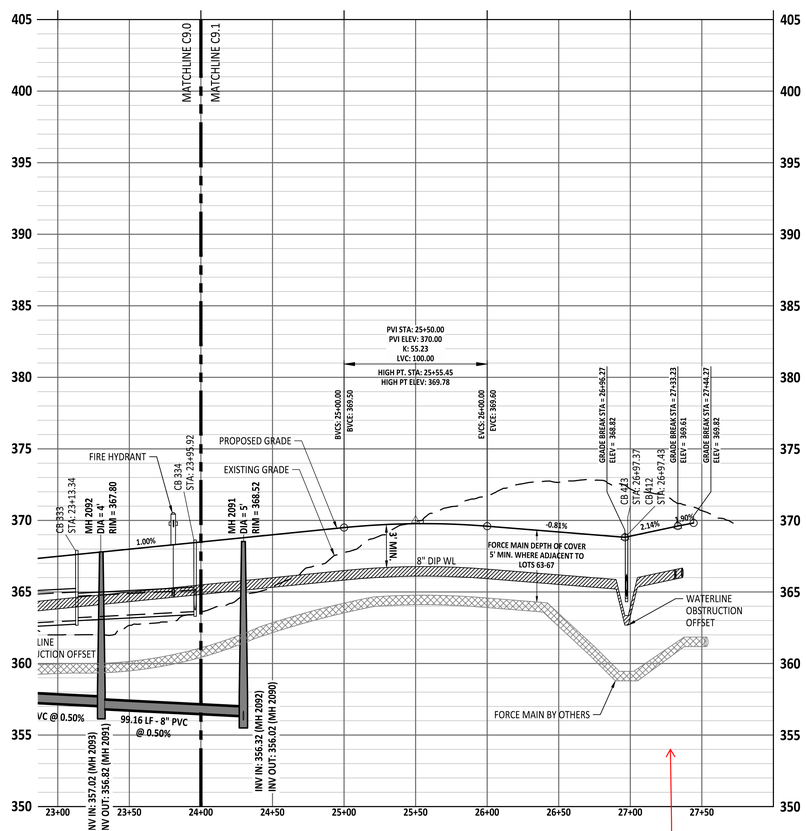

MULBERRY TREE DRIVE PROFILE

#59- Label tees/valves/etc. in both plan and profile views

#60- Ensure the elevations at tees line up across profiles

#62- Label min. separation between storm and water line

#62- Show sanitary sewer crossing and add labels indicating minimum separation requirements

CITY OF RALEIGH - PLANS AUTHORIZED FOR CONSTRUCTION

Electronic Approval: This approval is being issued electronically. This approval is valid only upon the signature of a City of Raleigh Review Officer below. The City will retain a copy of the approved plans. Any work authorized by this approval must proceed in accordance with the plans kept on file with the City. This electronic approval may not be edited once issued. Any modification to this approval once issued will invalidate this approval.

City of Raleigh Development Approval _____

Raleigh Water Review Officer

North Carolina 811 Call Before You Dig

*** 3 Days Before Digging ***
North Carolina 811
811 or 1-800-632-4949
Remote Ticket Entry
http://nc811.org/remoteticketentry.htm

AMERICAN Engineering
American Engineering Associates - Southeast, P.A.
4020 Westchase Boulevard, Suite 450
Raleigh, NC 27607
919-469-1101

NORTH CAROLINA
AMERICAN ENGINEERING ASSOCIATES SOUTHEAST
C-3881
CERTIFICATE OF AUTHORIZATION

PRELIMINARY
DO NOT USE FOR CONSTRUCTION

NORTH CAROLINA PROFESSIONAL ENGINEER SEAL
JACOB P. KLEIN
Digitally signed by
Date: 2024.12.02

NO.	DATE	REVISION:

STIPULATION FOR REUSE

THIS DRAWING WAS PREPARED FOR USE ON THE SPECIFIC SITE, NAMED HEREON, CONTEMPORANEOUSLY WITH ITS ISSUE DATE AS LISTED, HEREON, AND IT IS NOT SUITABLE FOR USE ON A DIFFERENT PROJECT SITE OR AT A LATER TIME. USE OF THIS DRAWING FOR REFERENCE OR EXAMPLE ON ANOTHER PROJECT REQUIRES THE SERVICES OF PROPERLY LICENSED ARCHITECTS AND ENGINEERS. REPRODUCTION OF THIS DRAWING FOR REUSE ON ANOTHER PROJECT IS NOT AUTHORIZED AND MAY BE CONTRARY TO THE LAW.

THE PRESERVE AT MOODY FARM

ROLESVILLE ROAD
WAKE COUNTY, NC

JOB NUMBER: 21-002
CHECKED BY: JK
DRAWN BY: RC & SM
DATE: 12/02/2024

SHEET TITLE:

MULBERRY PLAN AND PROFILE

SHEET NO.:

C9.1

Z:\Jobs\21-002 Moody Development Tract (R21000310wg)_Working Dwgs\Construction Set\0.0- 9.1 Mulberry Plan and Profiles.dwg December 2, 2024

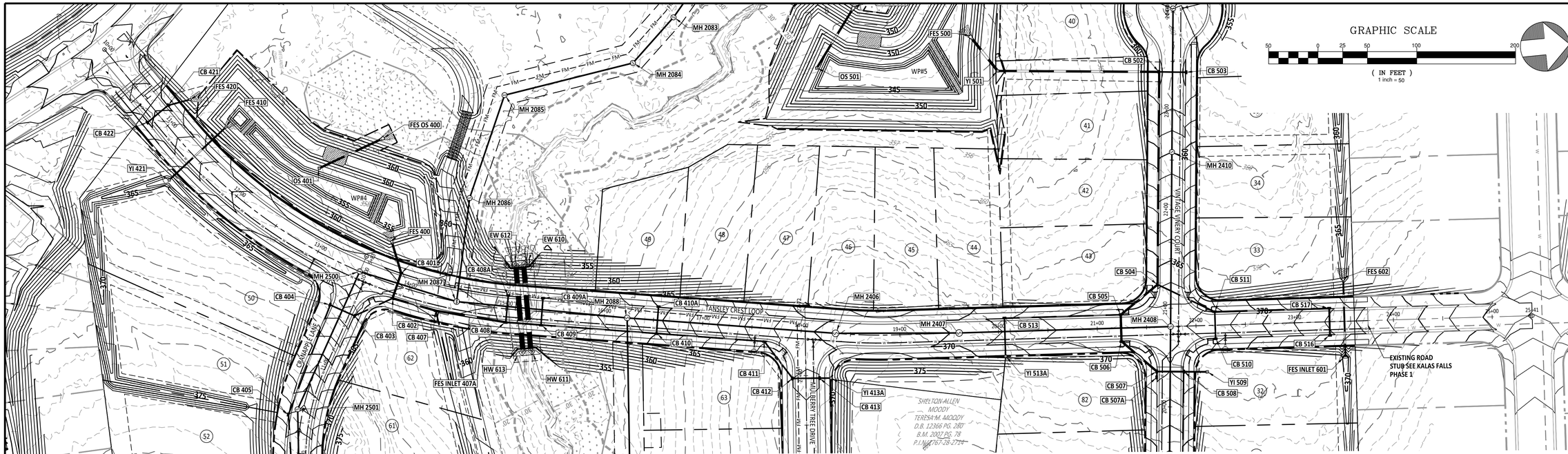

TANSLEY CREST LOOP PLAN

#59- Label tees/valves/etc. in both plan and profile views

#62- Label min. separation at pipe crossings

#60- Ensure the elevations at tees line up across profiles

#64- Sanitary sewer pipe greater than 12' deep should be SDR 26

#63- How is the proposed grade tying in? What is the correct existing grade?

#63- What is the correct existing grade?

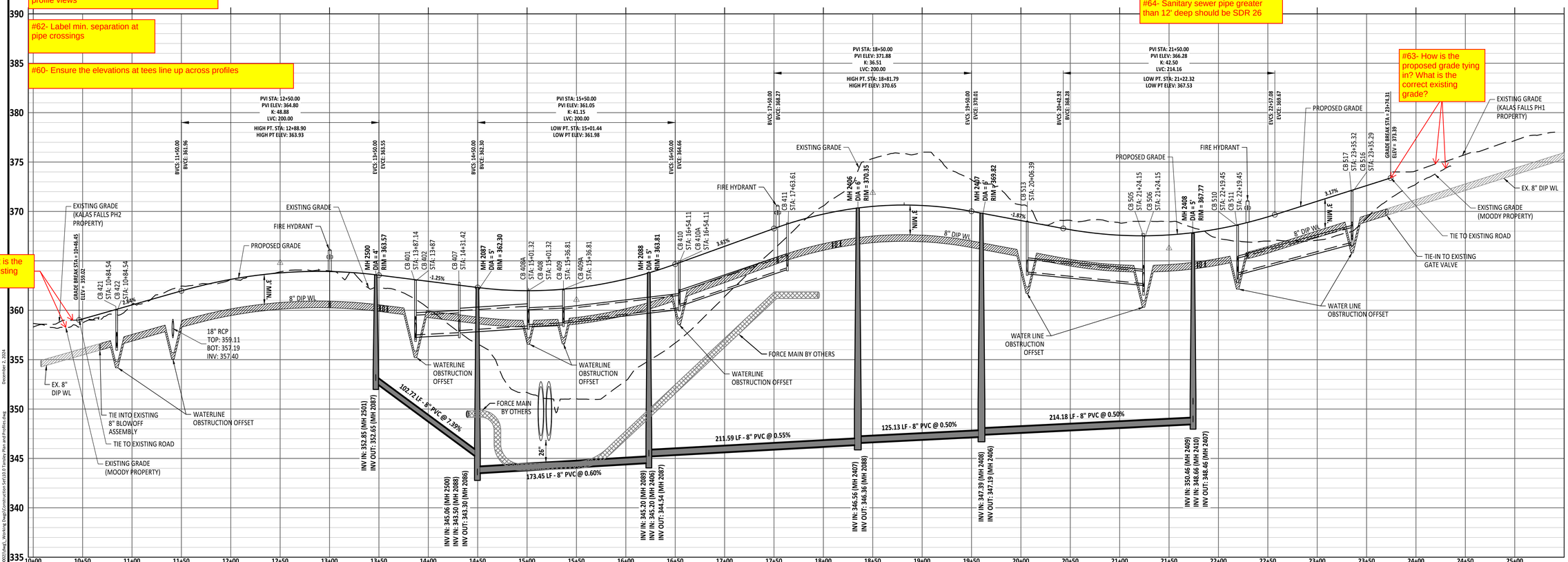

TANSLEY CREST LOOP PROFILE

CITY OF RALEIGH - PLANS AUTHORIZED FOR CONSTRUCTION

Electronic Approval: This approval is being issued electronically. This approval is valid only upon the signature of a City of Raleigh Review Officer below. The City will retain a copy of the approved plans. Any work authorized by this approval must proceed in accordance with the plans kept on file with the City. This electronic approval may not be edited once issued. Any modification to this approval once issued will invalidate this approval.

City of Raleigh Development Approval _____

Raleigh Water Review Officer

North Carolina 811

*** 3 Days Before Digging ***
North Carolina 811
811 or 1-800-632-4949
Remote Ticket Entry
http://nc811.org/remoteticketentry.htm

AMERICAN Engineering
American Engineering Associates - Southeast, P.A.
4020 Westchase Boulevard, Suite 450
Raleigh, NC 27607
919-469-1101

NORTH CAROLINA AMERICAN ENGINEERING ASSOCIATES SOUTHEAST C-3881 CERTIFICATE OF AUTHORIZATION

NORTH CAROLINA PROFESSIONAL ENGINEER SEAL 045088 JACOB P. KLEIN

PRELIMINARY
DO NOT USE FOR CONSTRUCTION
Digitally signed by Jacob Klein
Date: 2024.12.02

NO.	DATE	REVISION:

STIPULATION FOR REUSE

THIS DRAWING WAS PREPARED FOR USE ON THE SPECIFIC SITE, NAMED HEREON, CONTEMPORANEOUSLY WITH ITS ISSUE DATE AS LISTED, HEREON, AND IT IS NOT SUITABLE FOR USE ON A DIFFERENT PROJECT SITE OR AT A LATER TIME. USE OF THIS DRAWING FOR REFERENCE OR EXAMPLE ON ANOTHER PROJECT REQUIRES THE SERVICES OF PROPERLY LICENSED ARCHITECTS AND ENGINEERS. REPRODUCTION OF THIS DRAWING FOR REUSE ON ANOTHER PROJECT IS NOT AUTHORIZED AND MAY BE CONTRARY TO THE LAW.

THE PRESERVE AT MOODY FARM

ROLESVILLE ROAD
WAKE COUNTY, NC

JOB NUMBER: 21-002
CHECKED BY: JK
DRAWN BY: RC & SM
DATE: 12/02/2024

SHEET TITLE:
TANSLEY CREST LOOP PLAN AND PROFILE

SHEET NO.:
C10.0

Z:\Jobs\21-002 Moody Development Tract (B21000031)\Dwg_Working Dwgs\Construction Set\10.0 Tansley Plan and Profiles.dwg
December 2, 2024

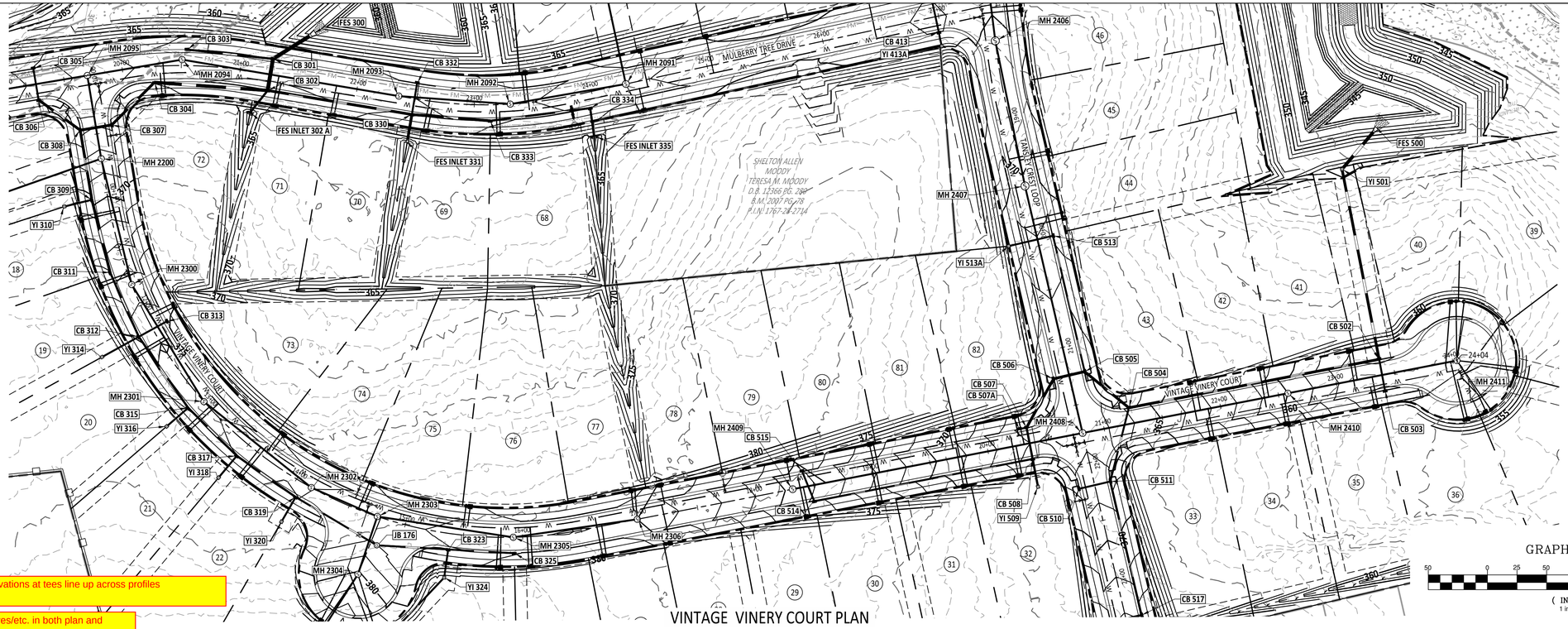

VINTAGE VINERY COURT PLAN

#60- Ensure the elevations at tees line up across profiles

#59- Label tees/valves/etc. in both plan and profile views

#62- label min. separation at pipe crossings

#65- Grade change not to exceed 3% without a vertical curve

#66- Adhere to min. K value per NCDOT Subdivision Roads Minimum Construction Standards

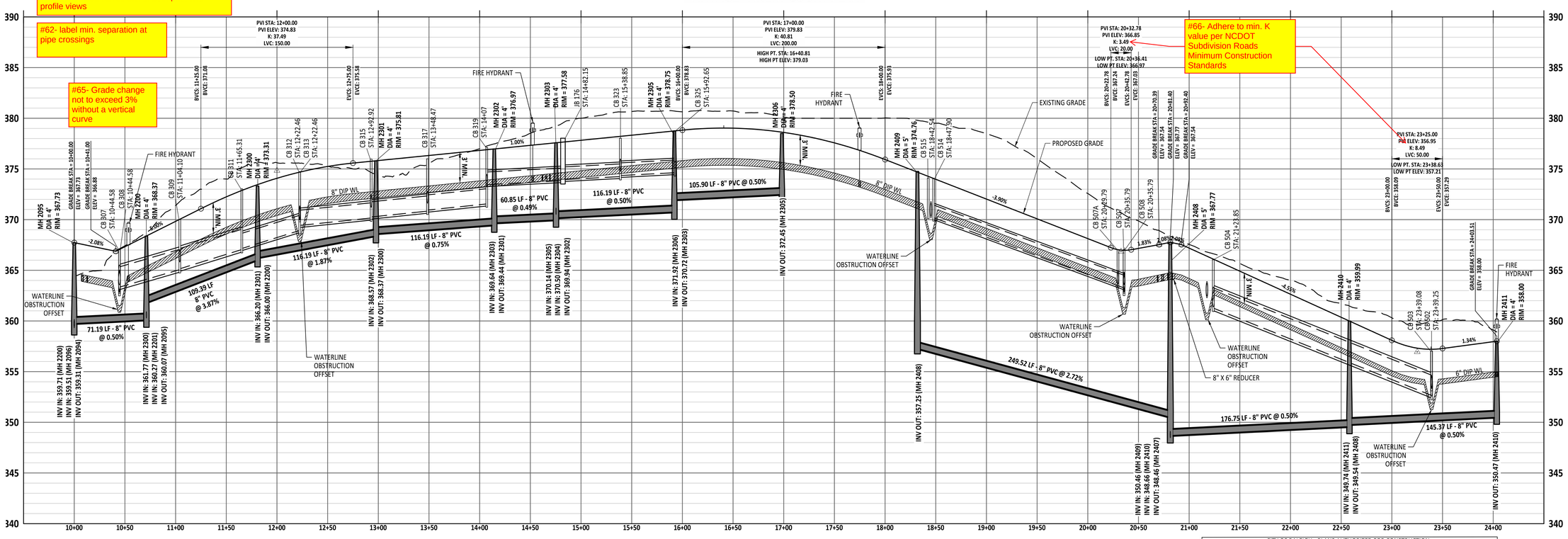

VINTAGE VINERY COURT PROFILE

CITY OF RALEIGH - PLANS AUTHORIZED FOR CONSTRUCTION

Electronic Approval: This approval is being issued electronically. This approval is valid only upon the signature of a City of Raleigh Review Officer below. The City will retain a copy of the approved plans. Any work authorized by this approval must proceed in accordance with the plans kept on file with the City. This electronic approval may not be edited once issued. Any modification to this approval once issued will invalidate this approval.

City of Raleigh Development Approval _____

Raleigh Water Review Officer

North Carolina 811

*** 3 Days Before Digging ***
North Carolina 811
811 or 1-800-632-4949
Remote Ticket Entry
http://nc811.org/remoteticketentry.htm

AMERICAN Engineering
American Engineering Associates - Southeast, P.A.
4020 Westchase Boulevard, Suite 450
Raleigh, NC 27607
919-469-1101

NORTH CAROLINA AMERICAN ENGINEERING ASSOCIATES SOUTHEAST C-3881 CERTIFICATE OF AUTHORIZATION

PRELIMINARY - DO NOT USE FOR CONSTRUCTION

NORTH CAROLINA PROFESSIONAL ENGINEER SEAL BOBBY P. KING

Digitally signed by
365.28 Date: 2024.12.02
15:00'

NO.	DATE	REVISION:

STIPULATION FOR REUSE

THIS DRAWING WAS PREPARED FOR USE ON THE SPECIFIC SITE, NAMED HEREON, CONTEMPORANEOUSLY WITH ITS ISSUE DATE AS LISTED, HEREON. AND IT IS NOT SUITABLE FOR USE ON A DIFFERENT PROJECT SITE OR AT A LATER TIME. USE OF THIS DRAWING FOR REFERENCE OR EXAMPLE ON ANOTHER PROJECT REQUIRES THE SERVICES OF PROPERLY LICENSED ARCHITECTS AND ENGINEERS. REPRODUCTION OF THIS DRAWING FOR REUSE ON ANOTHER PROJECT IS NOT AUTHORIZED AND MAY BE CONTRARY TO THE LAW.

THE PRESERVE AT MOODY FARM

ROLESVILLE ROAD
WAKE COUNTY, NC

JOB NUMBER: 21-002
CHECKED BY: JK
DRAWN BY: RC & SM
DATE: 12/02/2024

SHEET TITLE:

VINTAGE VINERY CT PLAN AND PROFILE

SHEET NO.:

C11.0

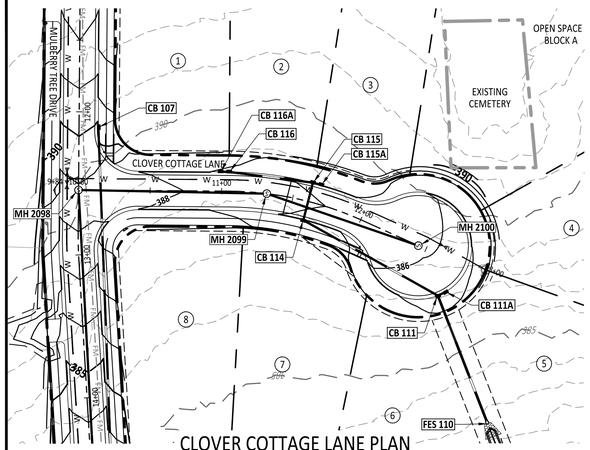

CLOVER COTTAGE LANE PLAN

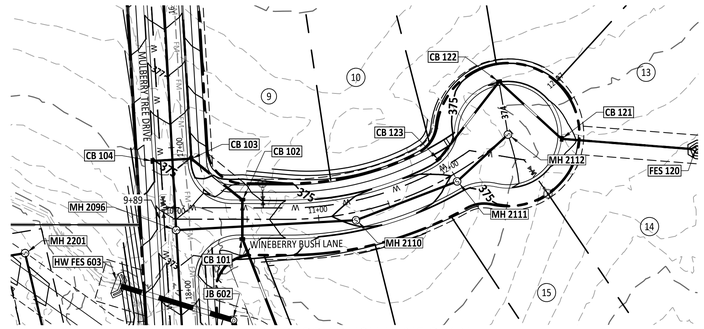

WINEBERRY BUSH LANE PLAN

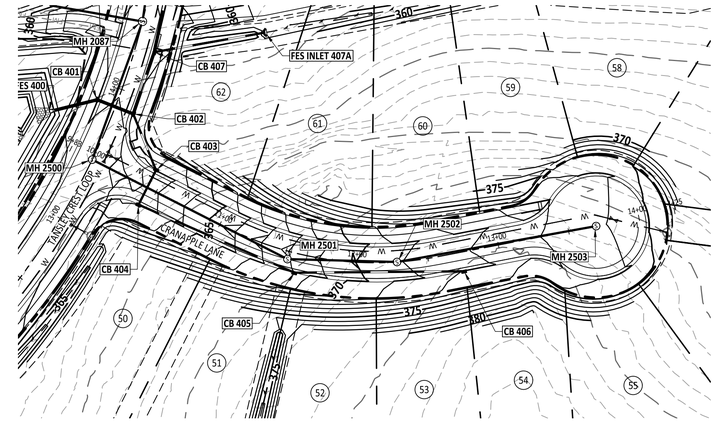

CRANAPPLE LANE PLAN

GRAPHIC SCALE

(IN FEET)
1 inch = 50

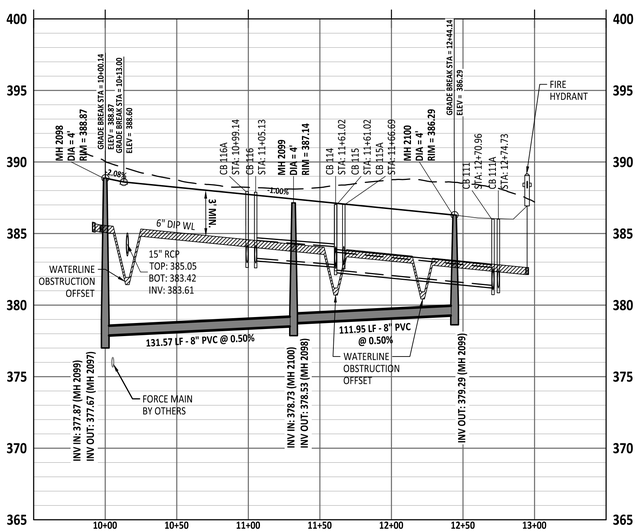

CLOVER COTTAGE LANE PROFILE

GRAPHIC SCALE

(IN FEET)
1 inch = 50

#66- Adhere to min. K value per NCDOT Subdivision Roads Minimum Construction Standards

#67- VC lengths should be in 50' increments

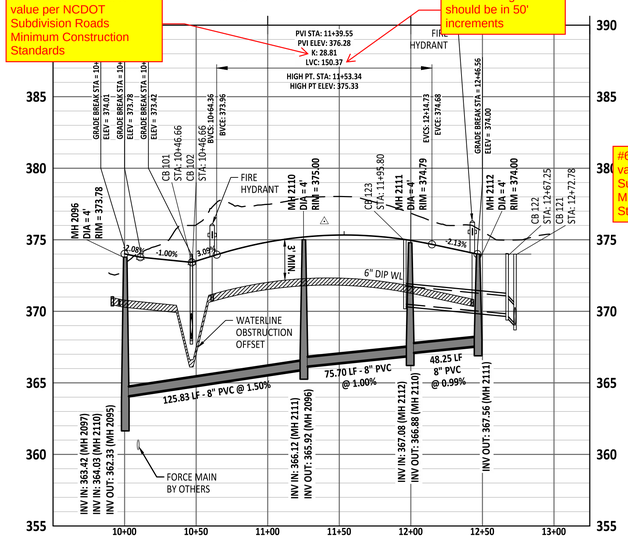

WINEBERRY BUSH LANE PROFILE

GRAPHIC SCALE

(IN FEET)
1 inch = 50

#67- VC lengths should be in 50' increments

#66- Adhere to min. K value per NCDOT Subdivision Roads Minimum Construction Standards

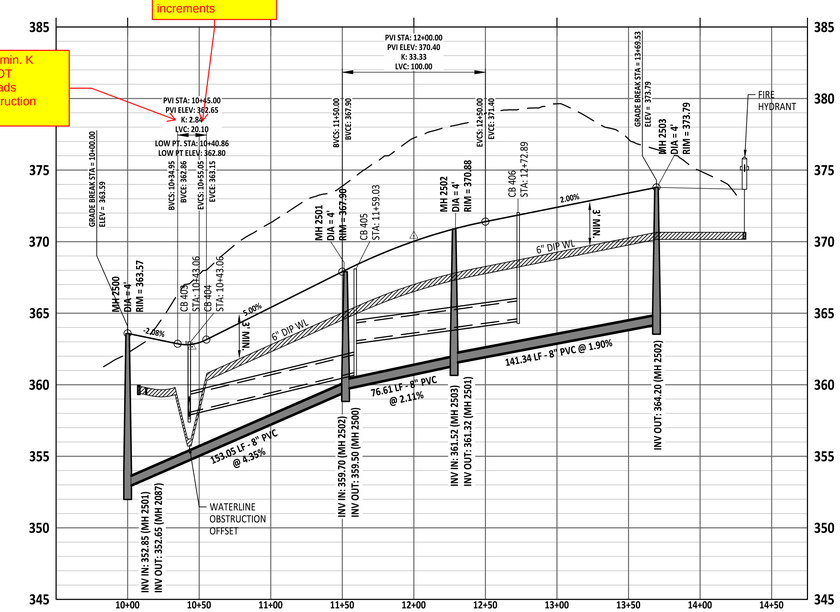

CRANAPPLE LANE PROFILE

#60- Ensure the elevations at tees line up across profiles

#59- Label tees/valves/etc. in both plan and profile views

#62- Label min. separation at pipe crossings

CITY OF RALEIGH - PLANS AUTHORIZED FOR CONSTRUCTION

Electronic Approval: This approval is being issued electronically. This approval is valid only upon the signature of a City of Raleigh Review Officer below. The City will retain a copy of the approved plans. Any work authorized by this approval must proceed in accordance with the plans kept on file with the City. This electronic approval may not be edited once issued. Any modification to this approval once issued will invalidate this approval.

City of Raleigh Development Approval _____

Raleigh Water Review Officer

North Carolina 811 — 1-800-STOP-UTILITY

*** 3 Days Before Digging ***
North Carolina 811
811 or 1-800-632-4949
Remote Ticket Entry
http://nc811.org/remoteticketentry.htm

AMERICAN Engineering
American Engineering Associates - Southeast, P.A.
4020 Westchase Boulevard, Suite 450
Raleigh, NC 27607
919-469-1101

NORTH CAROLINA AMERICAN ENGINEERING ASSOCIATES SOUTHEAST C-3881 CERTIFICATE OF AUTHORIZATION

PRELIMINARY NOT FOR CONSTRUCTION

NORTH CAROLINA PROFESSIONAL ENGINEER SEAL 036886 JACOB P. KLEIN

Digitally signed by Jacob Klein
DN: cn=Jacob Klein, o=AMERICAN ENGINEERING ASSOCIATES SOUTHEAST, ou=Engineering, email=jklein@aeasoutheast.com, c=US
Date: 2024.12.02 15:42:32 -05'00'

NO.	DATE	REVISION:

STIPULATION FOR REUSE

THIS DRAWING WAS PREPARED FOR USE ON THE SPECIFIC SITE, NAMED HEREON, CONTEMPORANEOUSLY WITH ITS ISSUE DATE AS LISTED, HEREON, AND IT IS NOT SUITABLE FOR USE ON A DIFFERENT PROJECT SITE OR AT A LATER TIME. USE OF THIS DRAWING FOR REFERENCE OR EXAMPLE ON ANOTHER PROJECT REQUIRES THE SERVICES OF PROPERLY LICENSED ARCHITECTS AND ENGINEERS. REPRODUCTION OF THIS DRAWING FOR REUSE ON ANOTHER PROJECT IS NOT AUTHORIZED AND MAY BE CONTRARY TO THE LAW.

THE PRESERVE AT MOODY FARM

ROLESVILLE ROAD
WAKE COUNTY, NC

JOB NUMBER: 21-002
CHECKED BY: JK
DRAWN BY: RC & SM
DATE: 12/02/2024

SHEET TITLE:
CUL-DE-SAC AND STUB PLAN AND PROFILES

SHEET NO.:
C12.0

Z:\Jobs\21-002 Moody Development Tract (R21000231)\Civil_Working\Dwg\Construction Sets\12.0 Cul-de-sac & Stub Plan and Profiles.dwg December 2, 2024

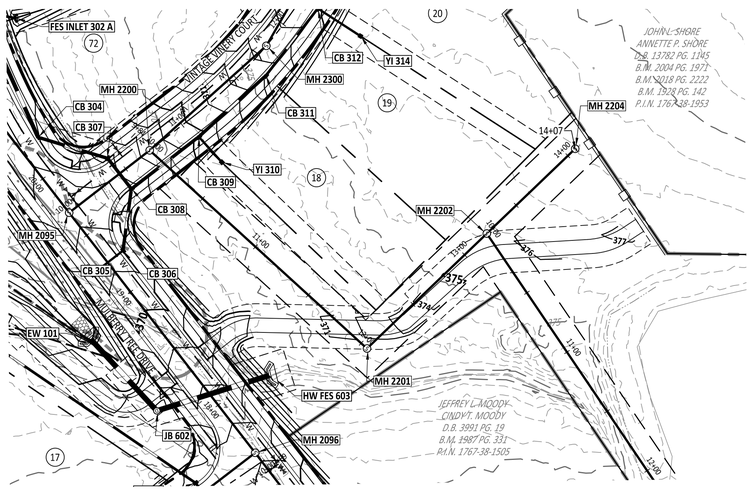

SEWER OUTFALL (A) AT VINTAGE VINERY COURT PLAN

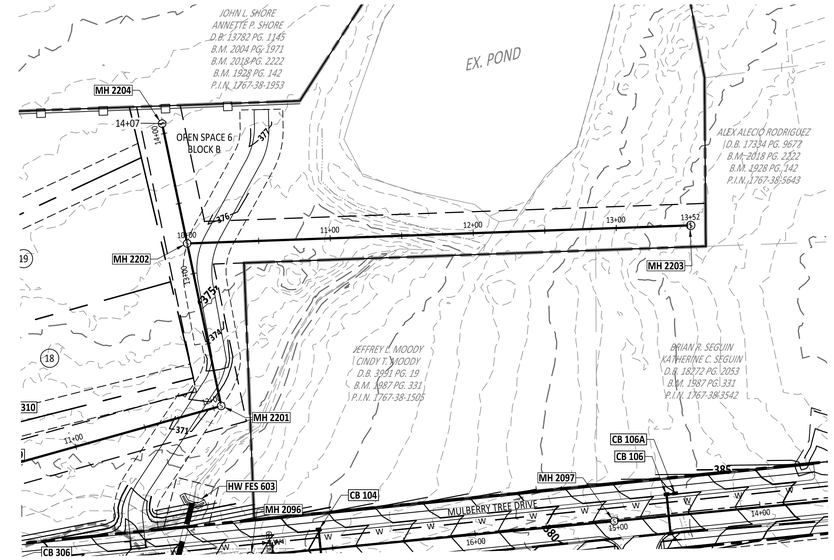

SEWER OUTFALL (B) AT VINTAGE VINERY COURT PLAN

GRAPHIC SCALE

50 0 25 50 100 200

(IN FEET)
1 inch = 50

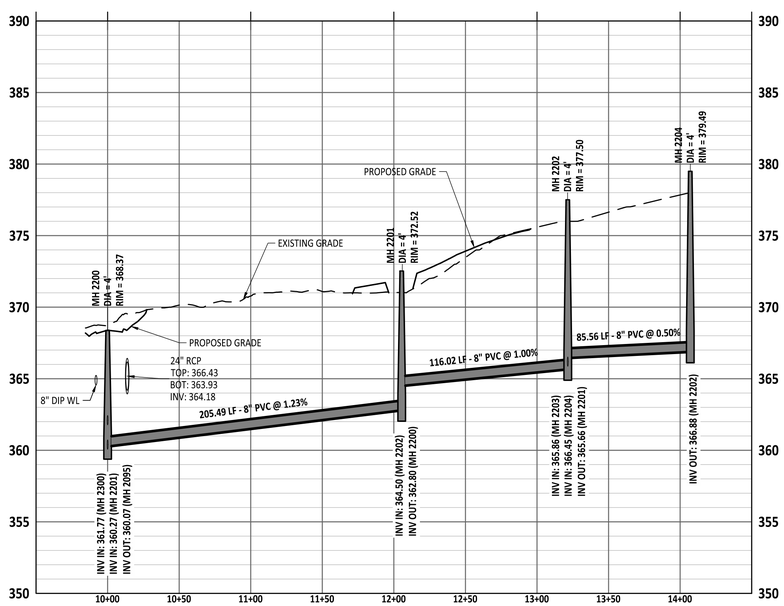

SEWER OUTFALL (A) AT VINTAGE VINERY COURT PROFILE

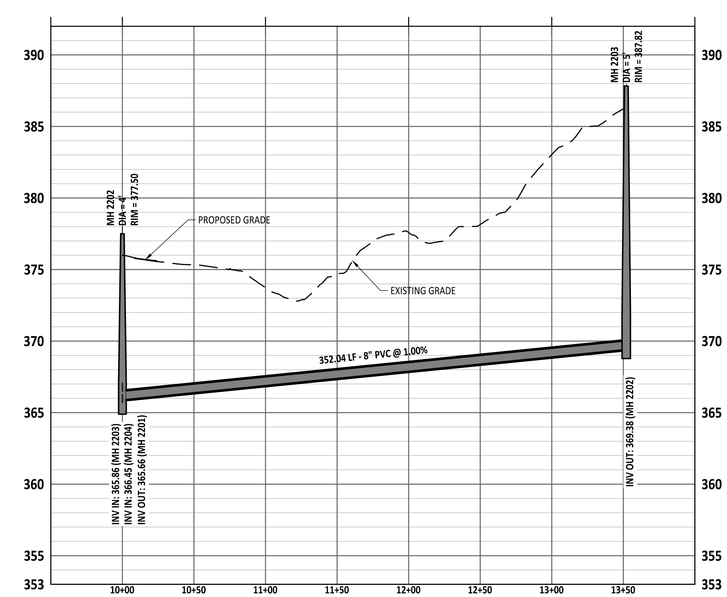

SEWER OUTFALL (B) AT VINTAGE VINERY COURT PROFILE

CITY OF RALEIGH - PLANS AUTHORIZED FOR CONSTRUCTION

Electronic Approval: This approval is being issued electronically. This approval is valid only upon the signature of a City of Raleigh Review Officer below. The City will retain a copy of the approved plans. Any work authorized by this approval must proceed in accordance with the plans kept on file with the City. This electronic approval may not be edited once issued. Any modification to this approval once issued will invalidate this approval.

City of Raleigh Development Approval _____

Raleigh Water Review Officer

North Carolina 811 Call Before You Dig!

*** 3 Days Before Digging ***
North Carolina 811
811 or 1-800-632-4949
Remote Ticket Entry
http://nc811.org/remoteticketentry.htm

AMERICAN Engineering
American Engineering Associates - Southeast, P.A.
4020 Westchase Boulevard, Suite 450
Raleigh, NC 27607
919-469-1101

NORTH CAROLINA AMERICAN ENGINEERING ASSOCIATES SOUTHEAST C-3881 CERTIFICATE OF AUTHORIZATION

PRELIMINARY
DO NOT USE FOR CONSTRUCTION

NORTH CAROLINA PROFESSIONAL ENGINEER SEAL 045268 JACOB P. KLEIN

Digitally signed by Jacob P. Klein
DN: cn=Jacob P. Klein, o=AMERICAN ENGINEERING ASSOCIATES SOUTHEAST, ou=Engineering, c=US
Date: 2024.12.02 15:19:56 -05'00'

NO.	DATE	REVISION:

STIPULATION FOR REUSE

THIS DRAWING WAS PREPARED FOR USE ON THE SPECIFIC SITE, NAMED HEREON, CONTEMPORANEOUSLY WITH ITS ISSUE DATE AS LISTED, HEREON, AND IT IS NOT SUITABLE FOR USE ON A DIFFERENT PROJECT SITE OR AT A LATER TIME. USE OF THIS DRAWING FOR REFERENCE OR EXAMPLE ON ANOTHER PROJECT REQUIRES THE SERVICES OF PROPERLY LICENSED ARCHITECTS AND ENGINEERS. REPRODUCTION OF THIS DRAWING FOR REUSE ON ANOTHER PROJECT IS NOT AUTHORIZED AND MAY BE CONTRARY TO THE LAW.

THE PRESERVE AT MOODY FARM

ROLESVILLE ROAD
WAKE COUNTY, NC

JOB NUMBER: 21-002
CHECKED BY: JK
DRAWN BY: RC & SM
DATE: 12/02/2024

SHEET TITLE:

SEWER OUTFALL

SHEET NO.:

C13.0

Z:\Jobs\21-002 Moody Development Tract (B21000035)\Dwg_Working Dwgs\Construction Set\13.0 Sewer Outfall Plan and Profile.dwg December 2, 2024

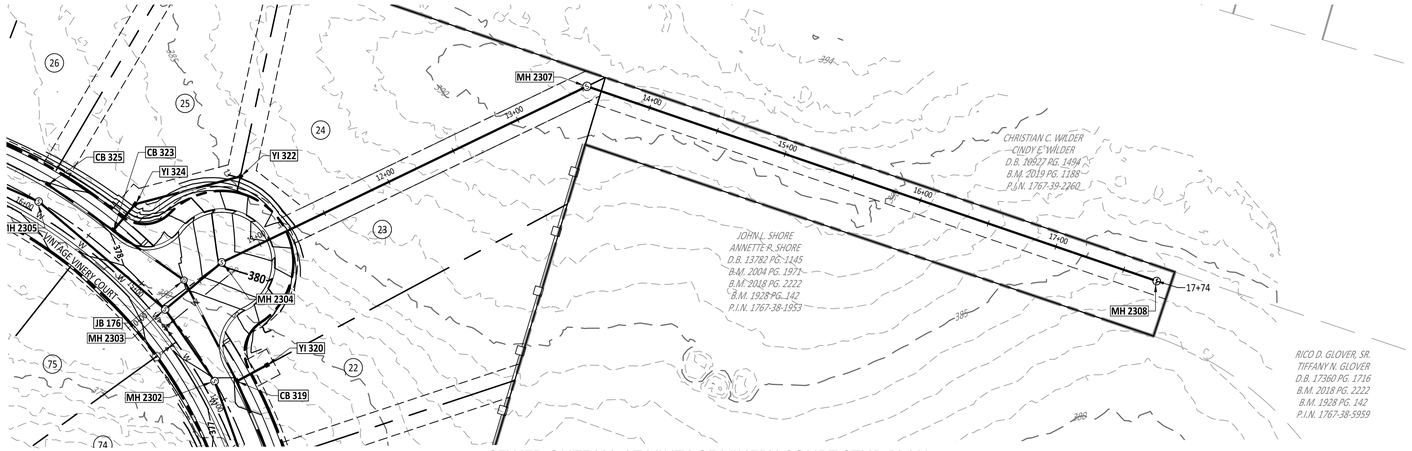

SEWER OUTFALL AT VINTAGE VINERY COURT STUB PLAN

GRAPHIC SCALE

(IN FEET)
1 inch = 50

#67- VC lengths should be in 50' increments

#66- Adhere to min. K value per NCDOT Subdivision Roads Minimum Construction Standards

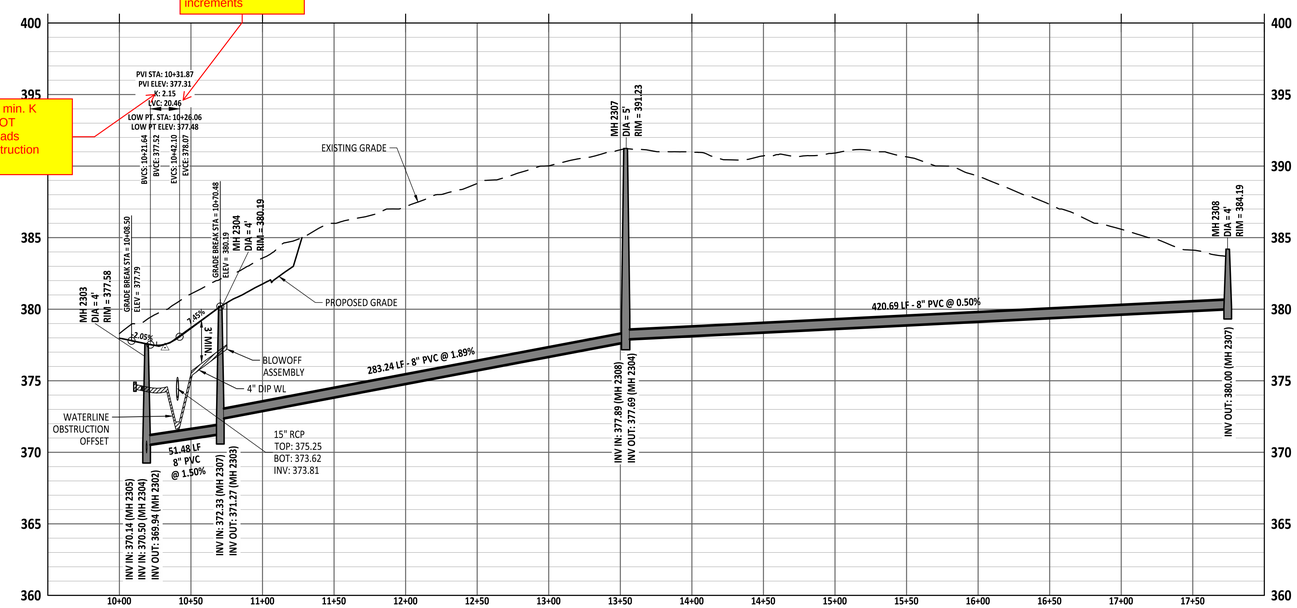

SEWER OUTFALL AT VINTAGE VINERY COURT STUB PROFILE

#62- Label min. separation at pipe crossings

#60- Ensure the elevations at tees line up across profiles

CITY OF RALEIGH - PLANS AUTHORIZED FOR CONSTRUCTION

Electronic Approval: This approval is being issued electronically. This approval is valid only upon the signature of a City of Raleigh Review Officer below. The City will retain a copy of the approved plans. Any work authorized by this approval must proceed in accordance with the plans kept on file with the City. This electronic approval may not be edited once issued. Any modification to this approval once issued will invalidate this approval.

City of Raleigh Development Approval _____

Raleigh Water Review Officer

North Carolina 811
*** 3 Days Before Digging ***
North Carolina 811
811 or 1-800-632-4949
Remote Ticket Entry
http://nc811.org/remoteticketentry.htm

AMERICAN Engineering
American Engineering Associates - Southeast, P.A.
4020 Westchase Boulevard, Suite 450
Raleigh, NC 27607
919-469-1101

NORTH CAROLINA AMERICAN ENGINEERING ASSOCIATES SOUTHEAST C-3881 CERTIFICATE OF AUTHORIZATION

PRELIMINARY NOT FOR CONSTRUCTION

NORTH CAROLINA PROFESSIONAL ENGINEER SEAL 036382 JAKOB P. KLEINSASSER

Digitally signed by Jakob Kleinsasser
DN: cn=Jakob Kleinsasser, o=AMERICAN ENGINEERING ASSOCIATES SOUTHEAST, ou=Engineering, email=jkleinsasser@aeassociates.com, c=US
2024.12.02 15:32:32 -05'00'

NO.	DATE	REVISION:

STIPULATION FOR REUSE

THIS DRAWING WAS PREPARED FOR USE ON THE SPECIFIC SITE, NAMED HEREON, CONTEMPORANEOUSLY WITH ITS ISSUE DATE AS LISTED, HEREON, AND IT IS NOT SUITABLE FOR USE ON A DIFFERENT PROJECT SITE OR AT A LATER TIME. USE OF THIS DRAWING FOR REFERENCE OR EXAMPLE ON ANOTHER PROJECT REQUIRES THE SERVICES OF PROPERLY LICENSED ARCHITECTS AND ENGINEERS. REPRODUCTION OF THIS DRAWING FOR REUSE ON ANOTHER PROJECT IS NOT AUTHORIZED AND MAY BE CONTRARY TO THE LAW.

THE PRESERVE AT MOODY FARM
ROLESVILLE ROAD
WAKE COUNTY, NC

JOB NUMBER: 21-002
CHECKED BY: JK
DRAWN BY: RC & SM
DATE: 12/02/2024

SHEET TITLE:
SEWER OUTFALL

SHEET NO.:
C13.1

Z:\Jobs\21-002 Moody Development Tract (R2100031)\Dwg_Working Dwgs\Construction Sets\13.0 Sewer Outfall Plan and Profile.dwg December 2, 2024

SEWER OUTFALL AT MULBERRY AND TANSLEY PLAN

GRAPHIC SCALE

50 0 25 50 100 200

(IN FEET)
1 inch = 50

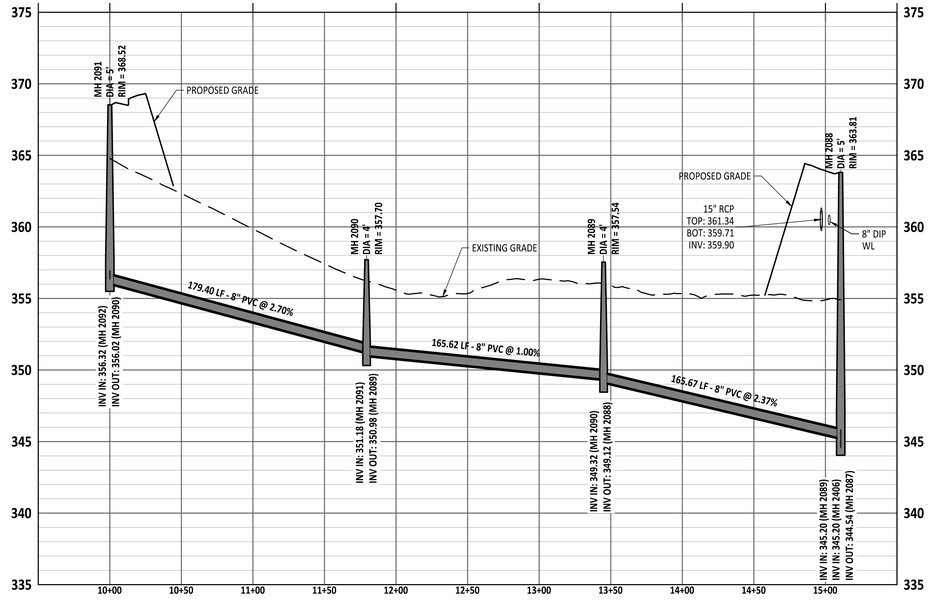

SEWER OUTFALL AT MULBERRY AND TANSLEY PROFILE

CITY OF RALEIGH - PLANS AUTHORIZED FOR CONSTRUCTION

Electronic Approval: This approval is being issued electronically. This approval is valid only upon the signature of a City of Raleigh Review Officer below. The City will retain a copy of the approved plans. Any work authorized by this approval must proceed in accordance with the plans kept on file with the City. This electronic approval may not be edited once issued. Any modification to this approval once issued will invalidate this approval.

City of Raleigh Development Approval _____

Raleigh Water Review Officer

North Carolina 811

*** 3 Days Before Digging ***
North Carolina 811
811 or 1-800-632-4949
Remote Ticket Entry
http://nc811.org/remoteticketentry.htm

AMERICAN Engineering
American Engineering Associates - Southeast, P.A.
4020 Westchase Boulevard, Suite 450
Raleigh, NC 27607
919-469-1101

NORTH CAROLINA
AMERICAN ENGINEERING ASSOCIATES SOUTHEAST
C-3881
CERTIFICATE OF AUTHORIZATION

NORTH CAROLINA PROFESSIONAL ENGINEER SEAL 19681
JACOB P. KLEIN

PRELIMINARY
DO NOT USE FOR CONSTRUCTION

Digitally signed by Jacob P. Klein
DN: cn=Jacob P. Klein, c=US, o=American Engineering Associates Southeast, ou=Engineering, email=jklein@aeasoutheast.com
Date: 2024.12.02 15:12:00 -05'00'

NO.	DATE	REVISION:

STIPULATION FOR REUSE

THIS DRAWING WAS PREPARED FOR USE ON THE SPECIFIC SITE, NAMED HEREON, CONTEMPORANEOUSLY WITH ITS ISSUE DATE AS LISTED, HEREON. AND IT IS NOT SUITABLE FOR USE ON A DIFFERENT PROJECT SITE OR AT A LATER TIME. USE OF THIS DRAWING FOR REFERENCE OR EXAMPLE ON ANOTHER PROJECT REQUIRES THE SERVICES OF PROPERLY LICENSED ARCHITECTS AND ENGINEERS. REPRODUCTION OF THIS DRAWING FOR REUSE ON ANOTHER PROJECT IS NOT AUTHORIZED AND MAY BE CONTRARY TO THE LAW.

THE PRESERVE AT MOODY FARM

ROLESVILLE ROAD
WAKE COUNTY, NC

JOB NUMBER: 21-002
CHECKED BY: JK
DRAWN BY: RC & SM
DATE: 12/02/2024

SHEET TITLE:

SEWER OUTFALL

SHEET NO.:

C13.2

Z:\2021-002 Moody Development Tract (R21000216)\dwg_Working Dwgs\Construction Set\C13.2-Sewer Outfall Plan and Profile.dwg December 2, 2024

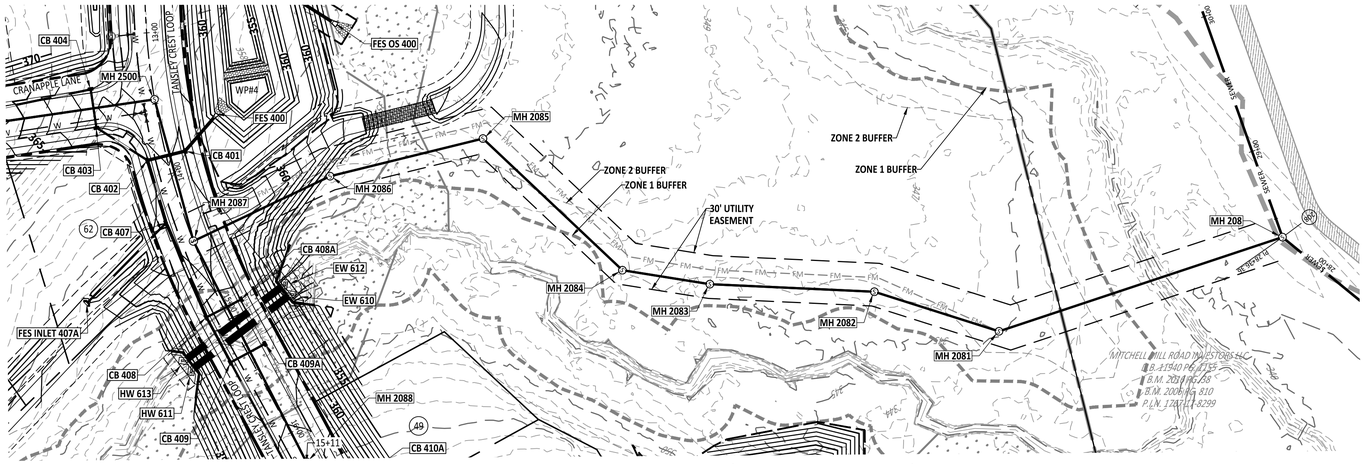

SEWER OUTFALL AT TANSLEY CREST LOOP (TIE-IN TO KALAS FALLS) PLAN

GRAPHIC SCALE

50 0 25 50 100 200

(IN FEET)
1 inch = 50

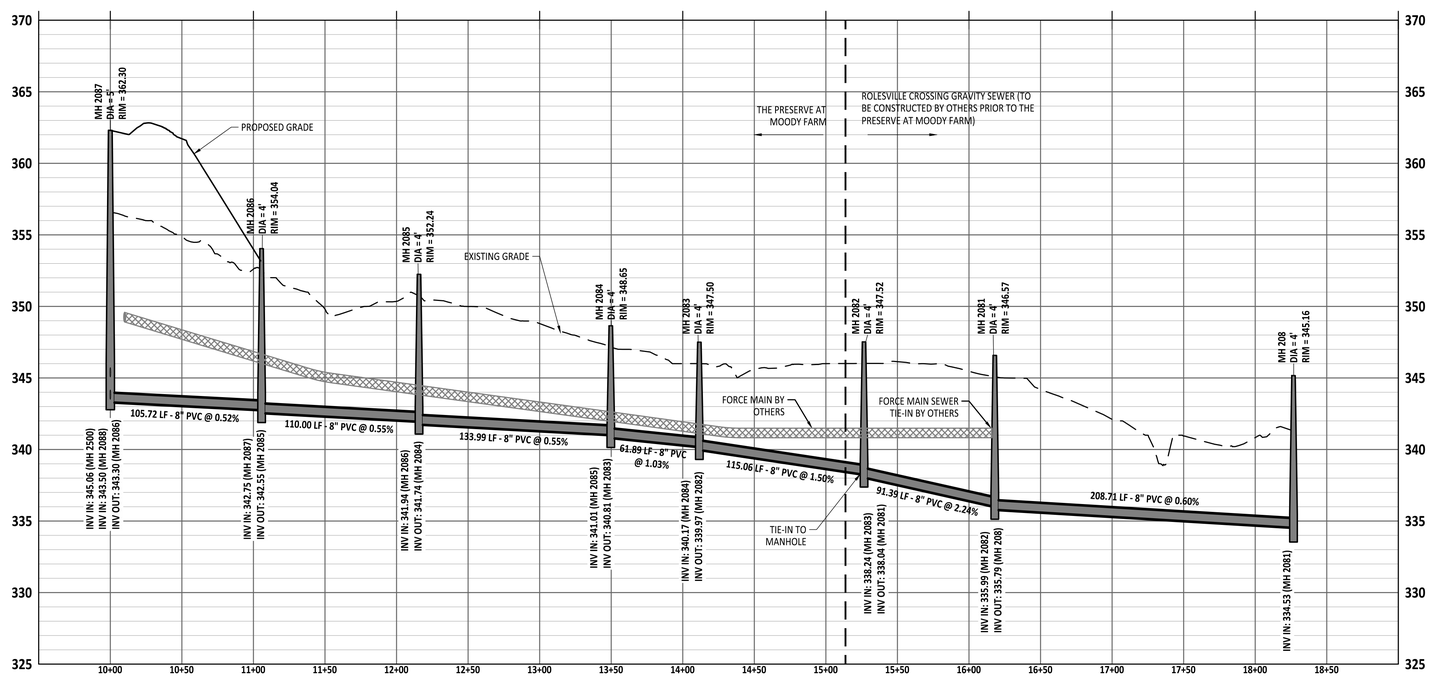

SEWER OUTFALL AT TANSLEY CREST LOOP (TIE-IN TO KALAS FALLS) PROFILE

CITY OF RALEIGH - PLANS AUTHORIZED FOR CONSTRUCTION

Electronic Approval: This approval is being issued electronically. This approval is valid only upon the signature of a City of Raleigh Review Officer below. The City will retain a copy of the approved plans. Any work authorized by this approval must proceed in accordance with the plans kept on file with the City. This electronic approval may not be edited once issued. Any modification to this approval once issued will invalidate this approval.

City of Raleigh Development Approval _____

Raleigh Water Review Officer

North Carolina 811

*** 3 Days Before Digging ***
North Carolina 811
811 or 1-800-632-4949
Remote Ticket Entry
http://nc811.org/remoteticketentry.htm

AMERICAN Engineering
American Engineering Associates - Southeast, P.A.
4020 Westchase Boulevard, Suite 450
Raleigh, NC 27607
919-469-1101

NORTH CAROLINA
AMERICAN ENGINEERING ASSOCIATES SOUTHEAST
C-3881
CERTIFICATE OF AUTHORIZATION

NORTH CAROLINA PROFESSIONAL ENGINEER SEAL 045268
JACOB P. KLEIN

PRELIMINARY
DO NOT USE FOR CONSTRUCTION

Digitally signed by Jacob P. Klein
DN: cn=Jacob P. Klein, c=US, o=American Engineering Associates Southeast, ou=Engineering, email=jklein@aeasoutheast.com
Date: 2024.12.02 15:24:32 -05'00'

NO.	DATE	REVISION:

STIPULATION FOR REUSE

THIS DRAWING WAS PREPARED FOR USE ON THE SPECIFIC SITE, NAMED HEREON, CONTEMPORANEOUSLY WITH ITS ISSUE DATE AS LISTED, HEREON, AND IT IS NOT SUITABLE FOR USE ON A DIFFERENT PROJECT SITE OR AT A LATER TIME. USE OF THIS DRAWING FOR REFERENCE OR EXAMPLE ON ANOTHER PROJECT REQUIRES THE SERVICES OF PROPERLY LICENSED ARCHITECTS AND ENGINEERS. REPRODUCTION OF THIS DRAWING FOR REUSE ON ANOTHER PROJECT IS NOT AUTHORIZED AND MAY BE CONTRARY TO THE LAW.

THE PRESERVE AT MOODY FARM

ROLESVILLE ROAD
WAKE COUNTY, NC

JOB NUMBER: 21-002
CHECKED BY: JK
DRAWN BY: RC & SM
DATE: 12/02/2024

SHEET TITLE:

SEWER OUTFALL

SHEET NO.:

C13.3

Z:\Jobs\21-002 Moody Development Tract (8210002)\dwg_Working Dwgs\Construction Set\13.0 Sewer Outfall Plan and Profile.dwg December 2, 2024

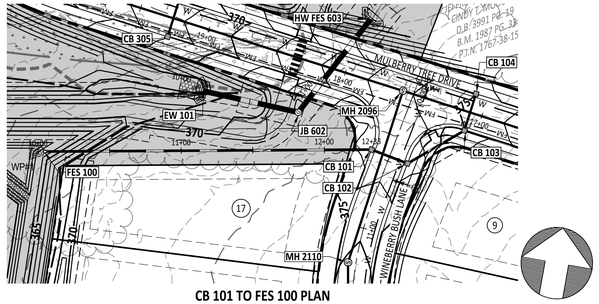

CB 101 TO FES 100 PLAN

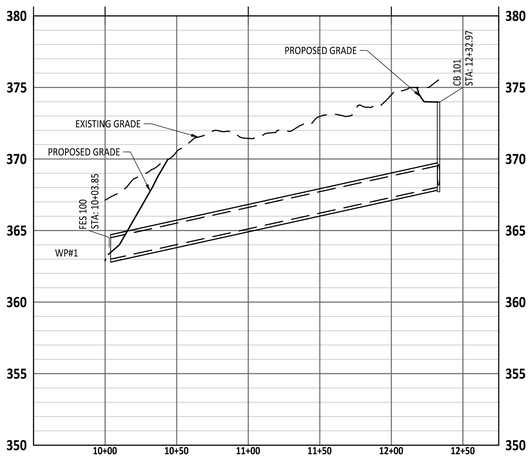

CB 101 TO FES 100 PROFILE

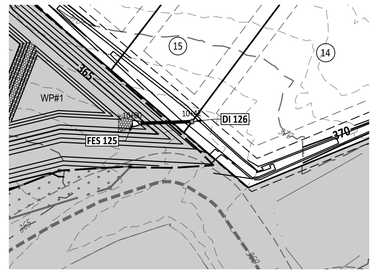

DI 126 TO FES 125 PLAN

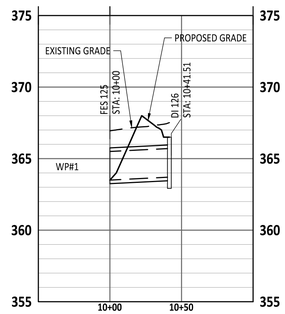

DI 126 TO FES 125 PROFILE

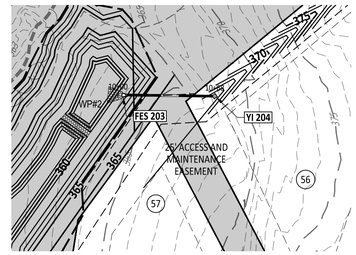

YI 204 TO FES 203 PLAN

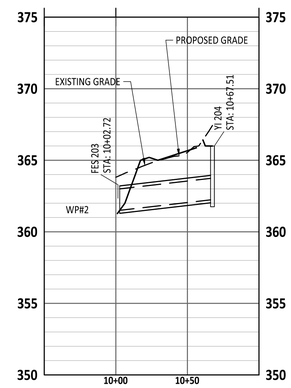

YI 204 TO FES 203 PROFILE

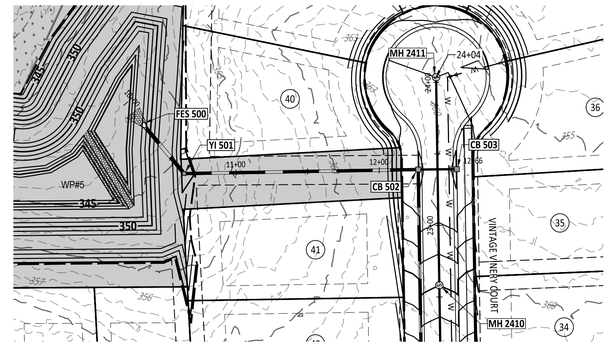

CB 503 TO FES 500 PLAN

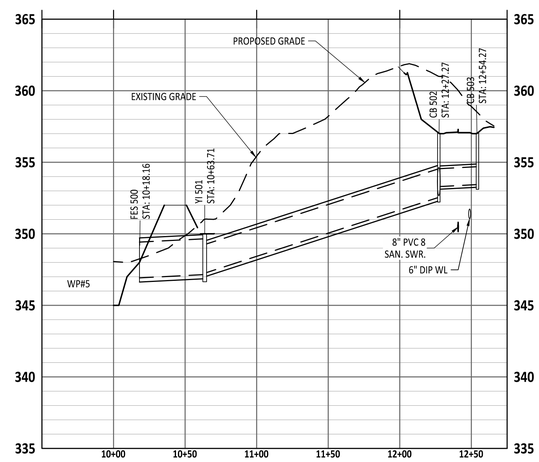

CB 503 TO FES 500 PROFILE

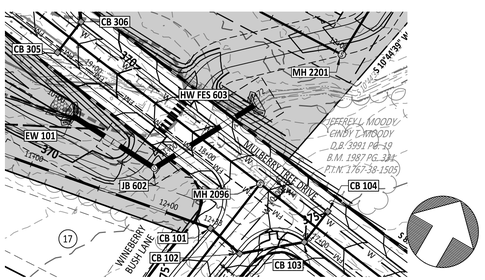

HW 603 TO EW 101 PLAN

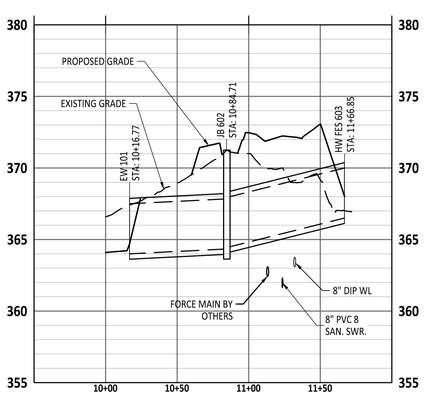

HW 603 TO EW 101 PROFILE

#62- Label min. separation at pipe crossings

GRAPHIC SCALE

50 0 25 50 100 200

(IN FEET)
1 inch = 50

CITY OF RALEIGH - PLANS AUTHORIZED FOR CONSTRUCTION

Electronic Approval: This approval is being issued electronically. This approval is valid only upon the signature of a City of Raleigh Review Officer below. The City will retain a copy of the approved plans. Any work authorized by this approval must proceed in accordance with the plans kept on file with the City. This electronic approval may not be edited once issued. Any modification to this approval once issued will invalidate this approval.

City of Raleigh Development Approval _____

Raleigh Water Review Officer

North Carolina 811

*** 3 Days Before Digging ***
North Carolina 811
811 or 1-800-632-4949
Remote Ticket Entry
http://nc811.org/remoteticketentry.htm

AMERICAN Engineering
American Engineering Associates - Southeast, P.A.
4020 Westchase Boulevard, Suite 450
Raleigh, NC 27607
919-469-1101

NORTH CAROLINA AMERICAN ENGINEERING ASSOCIATES SOUTHEAST C-3881 CERTIFICATE OF AUTHORIZATION

PRELIMINARY DO NOT USE FOR CONSTRUCTION

NORTH CAROLINA PROFESSIONAL ENGINEER SEAL JACOB P. KLEIN

Digitally signed by JACOB P. KLEIN
DN: cn=JACOB P. KLEIN, c=US, o=AMERICAN ENGINEERING ASSOCIATES SOUTHEAST, ou=Engineering, email=jklein@aeasoutheast.com
Date: 2024.12.02 15:24:52 -05'00'

NO.	DATE	REVISION:

STIPULATION FOR REUSE

THIS DRAWING WAS PREPARED FOR USE ON THE SPECIFIC SITE, NAMED HEREON, CONTEMPORANEOUSLY WITH ITS ISSUE DATE AS LISTED, HEREON, AND IT IS NOT SUITABLE FOR USE ON A DIFFERENT PROJECT SITE OR AT A LATER TIME. USE OF THIS DRAWING FOR REFERENCE OR EXAMPLE ON ANOTHER PROJECT REQUIRES THE SERVICES OF PROPERLY LICENSED ARCHITECTS AND ENGINEERS. REPRODUCTION OF THIS DRAWING FOR REUSE ON ANOTHER PROJECT IS NOT AUTHORIZED AND MAY BE CONTRARY TO THE LAW.

THE PRESERVE AT MOODY FARM

ROLESVILLE ROAD
WAKE COUNTY, NC

JOB NUMBER: 21-002
CHECKED BY: JK
DRAWN BY: RC & SM
DATE: 12/02/2024

SHEET TITLE:
STORM OUTFALL PLAN AND PROFILES

SHEET NO.:
C14.0

Z:\Jobs\21-002 Moody Development Tract (B21000)\Dwg_Working Dwgs\Construction Sets\14-Storm Outfall Plan and Profile.dwg December 2, 2024

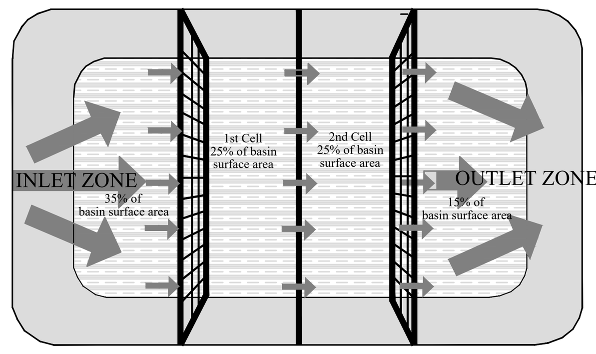

PLAN VIEW

NOTES:
1. BAFFLE MATERIAL SHOULD BE SECURED AT THE BOTTOM AND SIDES USING STAPLES OR BY TRENCHING AS FOR SILT FENCE.
2. MOST OF THE SEDIMENT WILL ACCUMULATE IN THE 1ST BAY, WHICH SHOULD BE READILY ACCESSIBLE FOR MAINTENANCE.
3. PROVIDE 3 BAFFLES (USE TWO IF LESS THAN 20 FEET IN LENGTH). PROVIDE 5 BAFFLES FOR DRAINAGE AREAS GREATER THAN 10 ACRES.
4. BAFFLE SHALL BE 700 G/M2 COIR EROSION BLANKET.
5. TOPS OF BAFFLES SHOULD BE 2 INCHES LOWER THAN THE TOP OF THE BERMS
6. INSPECT BAFFLES FOR REPAIR ONCE A WEEK AND AFTER EACH RAINFALL

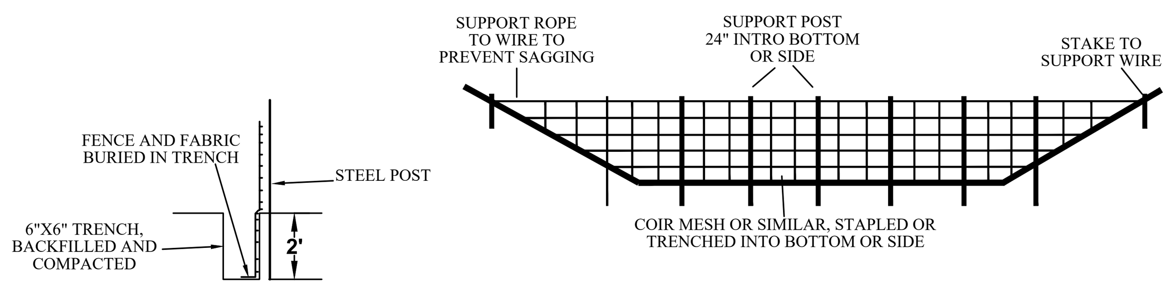

WAKE COUNTY NORTH CAROLINA

EFFECTIVE: 01/31/08

STANDARD BAFFLES DETAIL

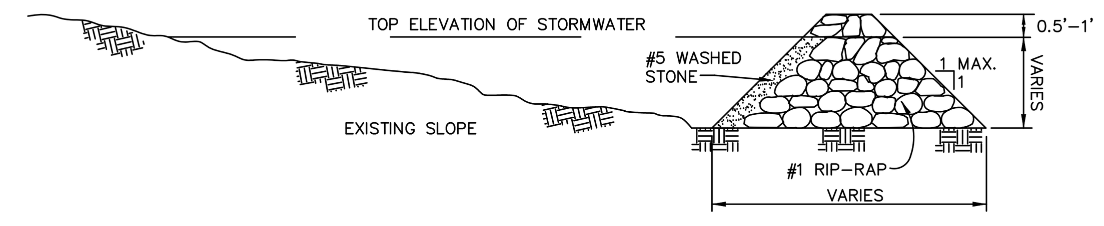

SIDE VIEW

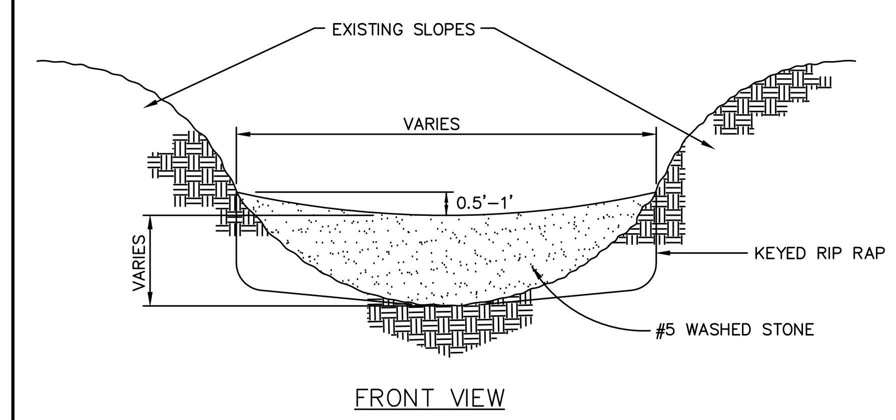

FRONT VIEW

CONSTRUCTION NOTES:

HEIGHT & WIDTH DETERMINED BY EXISTING TOPOGRAPHY AND SEDIMENT STORAGE REQUIRED.

KEY RIP RAP INTO THE DAM FOR STABILIZATION.

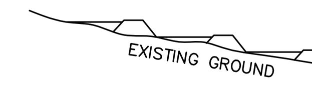

STEP SEQUENCE

NOTE: REMOVE SEDIMENT ACCUMULATION FROM BEHIND CHECK DAMS TO PREVENT DAMAGE TO CHANNEL VEGETATION. FLOW SHOULD BE MAINTAINED THROUGH THE DAM.

WAKE COUNTY NORTH CAROLINA

EFFECTIVE: 01/31/08

STANDARD CHECK DAM

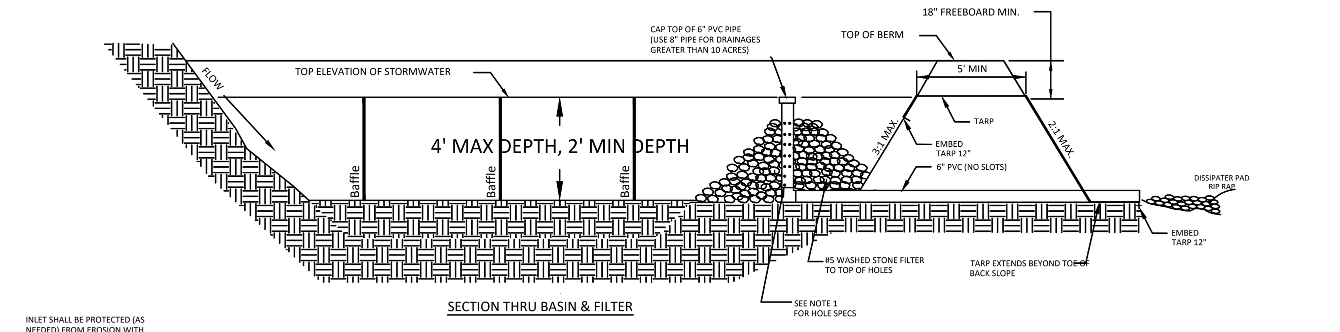

SECTION THRU BASIN & FILTER

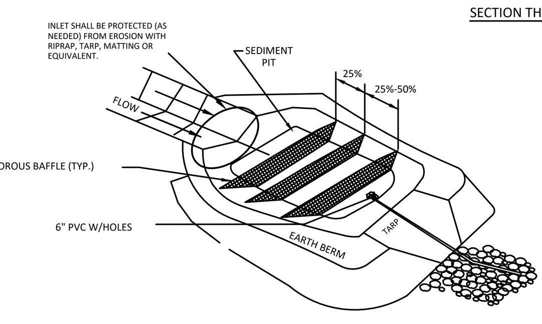

PERSPECTIVE VIEW

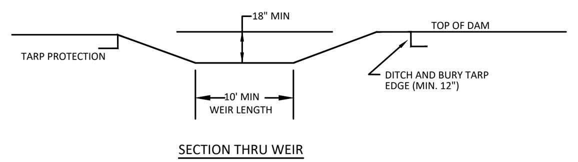

SECTION THRU WEIR

GENERAL NOTES

1. DRAW DOWN RISER & BARREL SHALL BE 6" SCH. 40 PVC WITH CLEAN-OUT CAP AND 3/4" HOLES. SEE NOTE 1 FOR NUMBER AND SPACING OF HOLES.
2. THE TARP USED TO PROTECT THE WEIR SHALL BE THE WIDTH SPECIFIED. THE LENGTH OF THE TARP SHALL BE ACCORDING TO AVAILABLE SUPPLY. IF MULTIPLE TARPS ARE TO BE USED, THEN TARPS SHALL BE OVERLAPPED AT LEAST 12". THE UPSTREAM 12" TARP SHALL OVERLAP THE DOWNSTREAM TARP. THE TARP SHALL BE 50 MIL. HEAVY DUTY SILVER TARPAULINS OR EQUIVALENT FOR U.V. RESISTANCE.
3. MAIINTENANCE: SEDIMENT TO BE REMOVED AND PROPERLY DISPOSED OF WHEN BASIN IS HALF FULL. GRAVEL FILTER AROUND RISER SHOULD BE REPLACED AS NEEDED TO ENSURE DEWATERING.

NOTE 1

HOLE SPECS:

DEWATERING HOLES WILL BE INSTALLED IN SETS OF HORIZONTAL RINGS. THE FIRST SET OF HOLES WILL BE SET 6 INCHES FROM THE BOTTOM OF THE RISER. RINGS WILL CONTINUE UP THE RISER IN INTERVALS OF 3 INCHES. HOLES WILL BE 3/4 INCH IN DIAMETER AND WILL BE SPACED EQUALLY AROUND THE RISER. THE NUMBER OF HOLES PER RING WILL EQUAL TO THE DRAINAGE AREA.

EXAMPLE
A BASIN DRAINING 2.0 ACRES SHOULD HAVE 2 HOLES PER RING EVERY 3 INCHES ON THE RISER PIPE. THE FIRST RING (2 HOLES) WILL BE SET 6 INCHES FROM THE BOTTOM OF THE RISER.

NOTE: ROUND DRAINAGE AREA TO THE NEAREST WHOLE NUMBER TO DETERMINE NUMBER OF HOLES.

WAKE COUNTY NORTH CAROLINA

EFFECTIVE: 01/31/08

STANDARD CUSTOM BASIN

CONSTRUCTION SPECIFICATIONS

1. LAY ONE BLOCK ON EACH SIDE OF THE STRUCTURE ON ITS SIDE IN THE BOTTOM ROW TO ALLOW POOL DRAINAGE. THE FOUNDATION SHOULD BE EXCAVATED AT LEAST 2 INCHES BELOW THE CREST OF THE STORM DRAIN. PLACE THE BOTTOM ROW OF BLOCKS AGAINST THE EDGE OF THE STORM DRAIN FOR LATERAL SUPPORT AND TO AVOID WASHOUTS WHEN OVERFLOW OCCURS. IF NEEDED, GIVE LATERAL SUPPORT TO SUBSEQUENT ROWS BY PLACING 2x4 WOOD STUDS THROUGH BLOCK OPENINGS.
2. CAREFULLY FIT HARDWARE CLOTH OR COMPARABLE WIRE MESH WITH 1/2 INCH OPENINGS OVER ALL BLOCK OPENINGS TO HOLD GRAVEL IN PLACE.
3. USE CLEAN GRAVEL, 3/4 TO 1/2 INCH IN DIAMETER, PLACED 2 INCHES BELOW THE TOP OF THE BLOCK ON A 2:1 SLOPE OR FLATTER AND SMOOTH IT TO AN EVEN GRADE. DOT #57 WASHED STONE IS RECOMMENDED.

MAINTENANCE: INSPECT INLET PROTECTION AND REMOVE SEDIMENT AFTER EACH RAIN EVENT. GRAVEL SHOULD BE REPLACED AND REPAIRS MADE AS NEEDED.

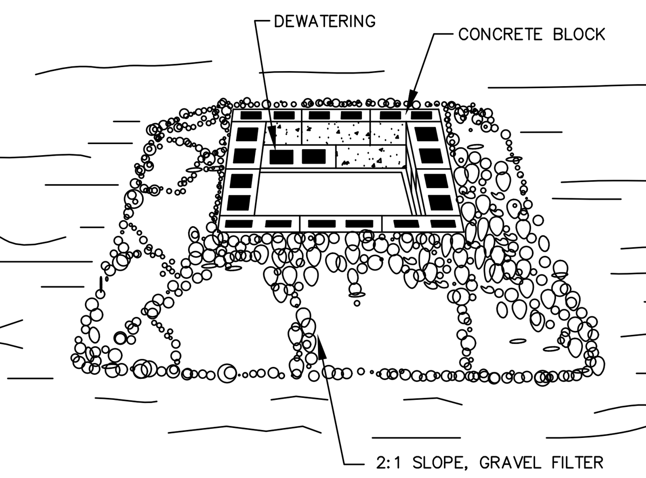

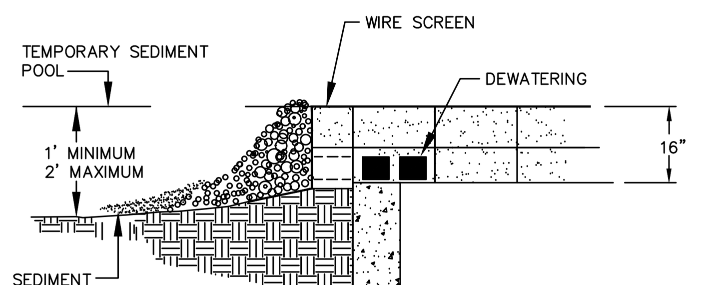

WAKE COUNTY NORTH CAROLINA

EFFECTIVE: 01/31/08

STANDARD BLOCK & GRAVEL DROP INLET PROTECTION

NOTES:

1. DIVERSION TO BE USED UPSLOPE OF A CONSTRUCTION SITE TO PREVENT STORM RUNOFF FROM ENTERING THE DISTURBED AREA.
2. IMMEDIATELY LINE AND STABILIZE BEFORE ANY DOWNSLOPE GRADING BEGINS (STABILIZATION MUST OCCUR BEFORE ISSUANCE OF A CERTIFICATE OF COMPLIANCE). STABILIZATION METHOD IS BASED ON VELOCITY OF OFFSITE DRAINAGE.
3. DIVERSIONS SHOULD ONLY BE USED FOR DRAINAGES 5 ACRES OR LESS.
4. ANY SEDIMENT LADEN WATER PRIOR TO STABILIZATION OF THE DIVERSION MUST BE DIVERTED INTO AN APPROVED EROSION AND SEDIMENT CONTROL BMP. CLEAN WATER SHOULD EMPTY INTO AN APPROVED OUTLET DEVICE.

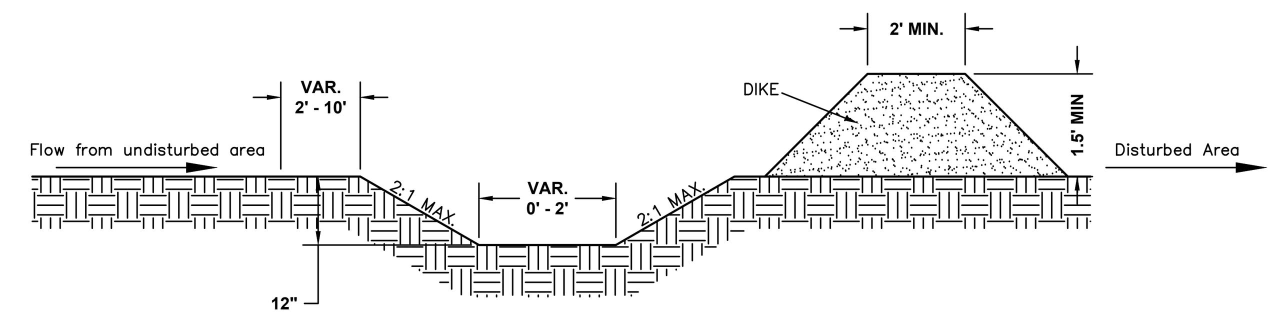

CROSS SECTIONAL VIEW

WAKE COUNTY NORTH CAROLINA

EFFECTIVE: 01/31/08

STANDARD CLEAN WATER DIVERSION

NOTES:

1. TEMPORARY DIVERSION DITCH TO BE USED TO INTERCEPT FLOW AND/OR DIVERT TO A SEDIMENT CONTROL MEASURE OR BMP.
2. SILT SHALL BE REMOVED WHEN DITCH IS ONE–HALF FULL.
3. DITCH SHALL BE RECONSTRUCTED WHEN DAMAGED BY EQUIPMENT OR COVERED BY FILL.
4. STABILIZE DIVERSION DITCH BERM WITH TEMPORARY SEEDING, MULCH WITH TAC, AND/OR EROSION CONTROL NETTING.

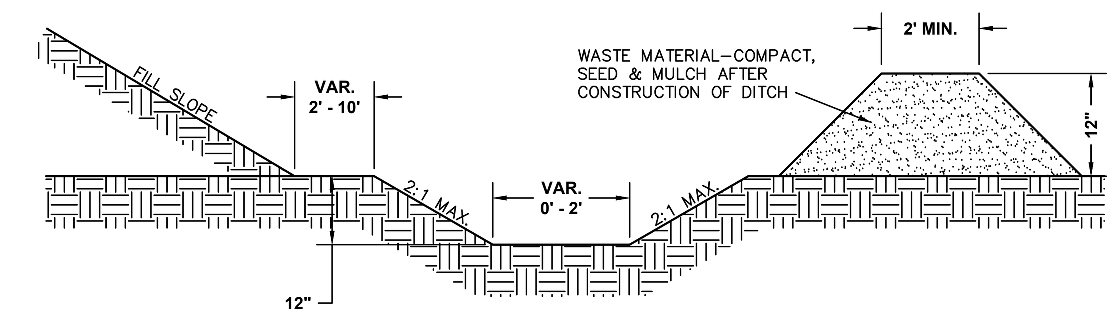

CROSS SECTIONAL VIEW

WAKE COUNTY NORTH CAROLINA

EFFECTIVE: 01/31/08

STANDARD TEMPORARY DIVERSION DITCH

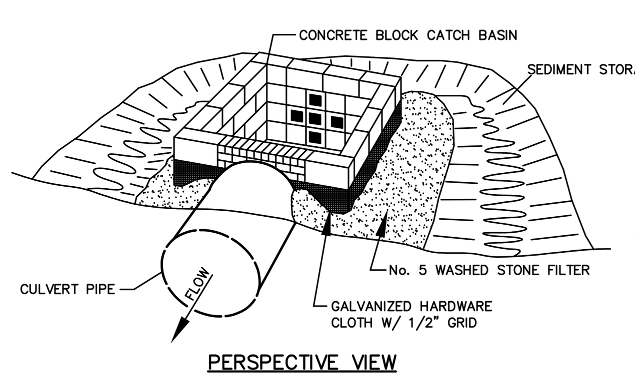

PERSPECTIVE VIEW

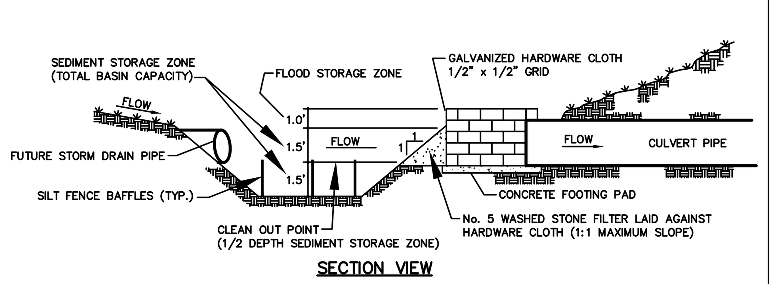

SECTION VIEW

USE OF CATCH BASIN RISER/FILTER ON FILL SITES

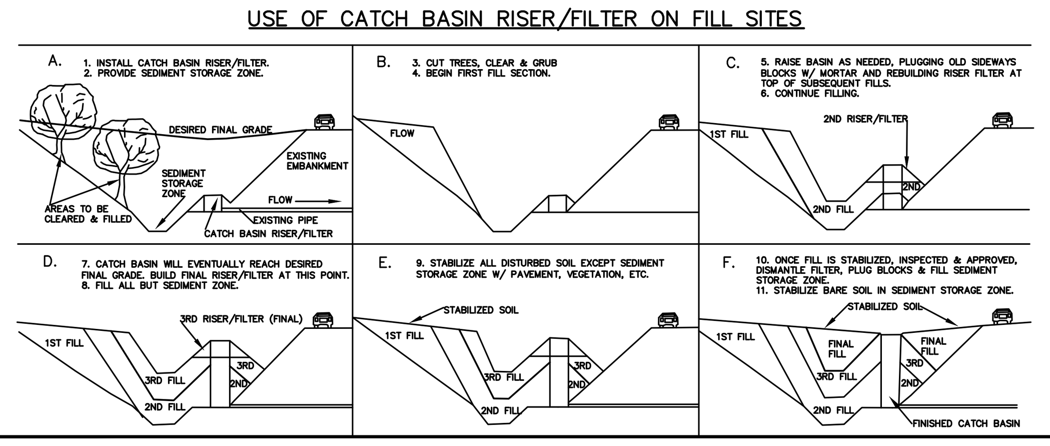

WAKE COUNTY NORTH CAROLINA

EFFECTIVE: 01/31/08

STANDARD CATCH BASIN RISER/FILTER

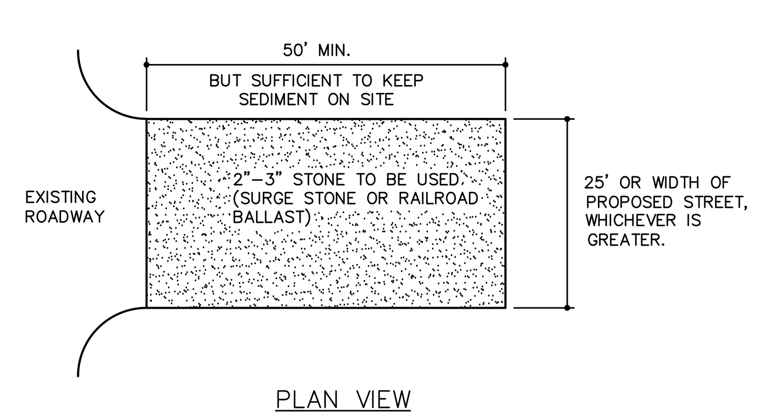

PLAN VIEW

NOTES:

1. PUT SILT FENCE OR TREE PROTECTION FENCE UP TO ENSURE CONSTRUCTION ENTRANCE IS USED.
2. IF CONSTRUCTION ON THE SITES ARE SUCH THAT THE MUD IS NOT REMOVED BY THE VEHICLE TRAVELING OVER THE STONE, THEN THE TIRES OF THE VEHICLES MUST BE WASHED BEFORE ENTERING THE PUBLIC ROAD.
3. MAINTAIN GRAVEL PAD IN A CONDITION TO PREVENT MUD OR SEDIMENT FROM LEAVING CONSTRUCTION SITE. ENTRANCE WILL REQUIRE PERIODIC REMOVAL OF SEDIMENT–LADEN STONE AND REPLACEMENT WITH FRESH STONE.

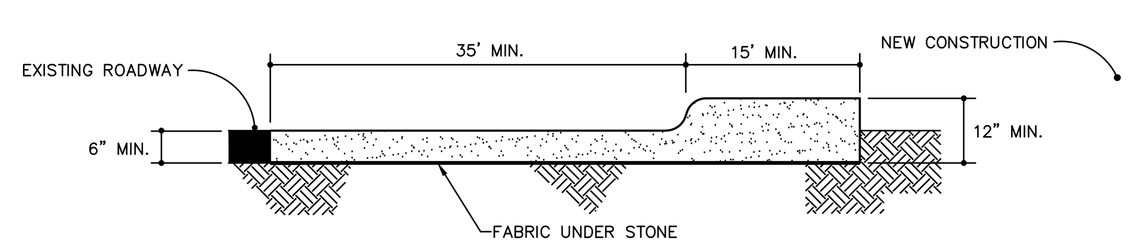

CROSS SECTION

WAKE COUNTY NORTH CAROLINA

EFFECTIVE: 01/31/08

STANDARD CONSTRUCTION ENTRANCE

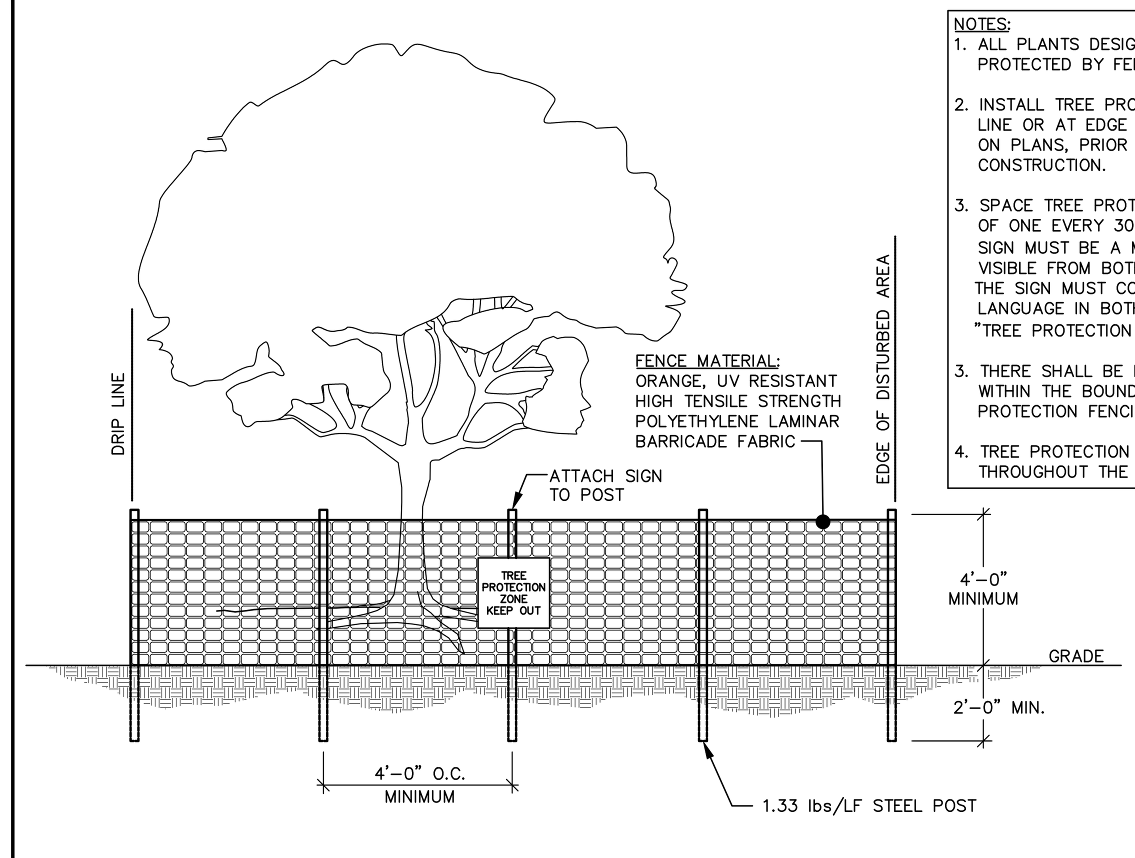

NOTES:
1. ALL PLANTS DESIGNATED TO BE SAVED SHALL BE PROTECTED BY FENCING, AS ILLUSTRATED.
2. INSTALL TREE PROTECTION FENCE AT TREE DRIP LINE OR AT EDGE OF DISTURBED AREA, AS SHOWN ON PLANS, PRIOR TO COMMENCEMENT OF CONSTRUCTION.
3. SPACE TREE PROTECTION ZONE SIGNS A MINIMUM OF ONE EVERY 300 FEET. THE SIZE OF EACH SIGN MUST BE A MINIMUM OF 2' x 2' AND BE VISIBLE FROM BOTH SIDES OF THE FENCE. THE SIGN MUST CONTAIN THE FOLLOWING LANGUAGE IN BOTH ENGLISH & SPANISH: "TREE PROTECTION ZONE, KEEP OUT".
3. THERE SHALL BE NO STORAGE OF MATERIAL WITHIN THE BOUNDARIES OF THE TREE PROTECTION FENCING.
4. TREE PROTECTION FENCING SHALL BE MAINTAINED THROUGHOUT THE DURATION OF THE PROJECT.

TREE PROTECTION FENCE

CITY OF RALEIGH - PLANS AUTHORIZED FOR CONSTRUCTION

Electronic Approval: This approval is being issued electronically. This approval is valid only upon the signature of a City of Raleigh Review Officer below. The City will retain a copy of the approved plans. Any work authorized by this approval must proceed in accordance with the plans kept on file with the City. This electronic approval may not be edited once issued. Any modification to this approval once issued will invalidate this approval.

City of Raleigh Development Approval ______________________________

Raleigh Water Review Officer

North Carolina 811
www.nc811.org
*** 3 Days Before Digging ***
North Carolina 811
811 or 1-800-632-4949
Remote Ticket Entry
http://nc811.org/remoteticketentry.htm

AMERICAN Engineering
American Engineering Associates - Southeast, P.A.
4020 Westchase Boulevard, Suite 450
Raleigh, NC 27607
919-469-1101

NORTH CAROLINA AMERICAN ENGINEERING ASSOCIATES SOUTHEAST C-3881 CERTIFICATE OF AUTHORIZATION

PRELIMINARY - DO NOT USE FOR CONSTRUCTION

NORTH CAROLINA PROFESSIONAL SEAL 56528 ENGINEER JAKOB P. KLEIN

Digitally signed by Jakob Klein
Date: 2024.12.02 16:11:02-05'00'

NO.	DATE	REVISION:

STIPULATION FOR REUSE

THIS DRAWING WAS PREPARED FOR USE ON THE SPECIFIC SITE, NAMED HEREON, CONTEMPORANEOUSLY WITH ITS ISSUE DATE AS LISTED, HEREON. AND IT IS NOT SUITABLE FOR USE ON A DIFFERENT PROJECT SITE OR AT A LATER TIME. USE OF THIS DRAWING FOR REFERENCE OR EXAMPLE ON ANOTHER PROJECT REQUIRES THE SERVICES OF PROPERLY LICENSED ARCHITECTS AND ENGINEERS. REPRODUCTION OF THIS DRAWING FOR REUSE ON ANOTHER PROJECT IS NOT AUTHORIZED AND MAY BE CONTRARY TO THE LAW.

THE PRESERVE AT MOODY FARM

ROLESVILLE ROAD
WAKE COUNTY, NC

JOB NUMBER: 21-002
CHECKED BY: JK
DRAWN BY: RC & SM
DATE: 12/02/2024

SHEET TITLE:

EROSION CONTROL DETAILS

SHEET NO.:

CD1

Z:\Jobs\21-002 Moody Development Tract (R210002)\dwg_Working Dwgs\Construction Set\CD1 Project Details.dwg
December 2, 2024

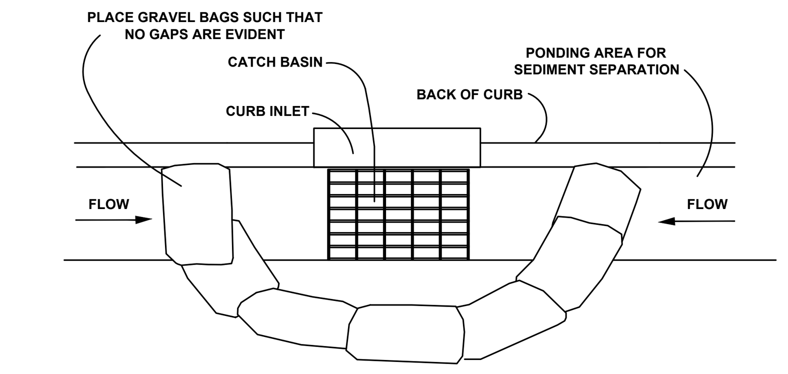

PLAN VIEW

NOTES:

1. PLACE GRAVEL BAG BARRIER ON GENTLY SLOPING STREET, WHERE WATER CAN POND AND ALLOW SEDIMENT TO SEPARATE FROM RUNNOFF.
2. USE SAND BAGS OF WOVEN GEOTEXTILE FABRIC (NOT BURLAP) AND FILL WITH ½ INCH (OR SMALLER) GRAVEL. BAGS MUST BE LAYERED SUCH THAT NO GAPS ARE EVIDENT.
3. INSPECT BARRIERS AND REMOVE SEDIMENT AFTER EACH STORM EVENT, SEDIMENT AND GRAVEL MUST BE REMOVED FROM THE TRAVELED WAY IMMEDIATELY.
4. WHEN INSTALLING CURB INLET PROTECTION DEVICES, NEVER BLOCK THE CURB INLET.

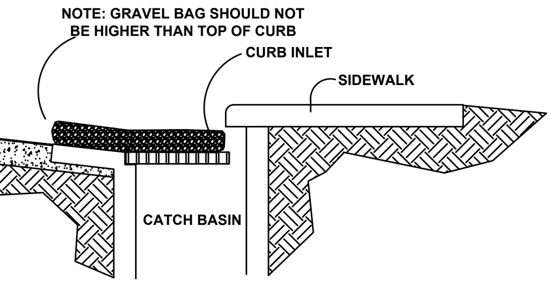

SECTION VIEW

WAKE COUNTY NORTH CAROLINA
EFFECTIVE: 01/31/08

STANDARD GRAVEL BAG CURB INLET PROTECTION

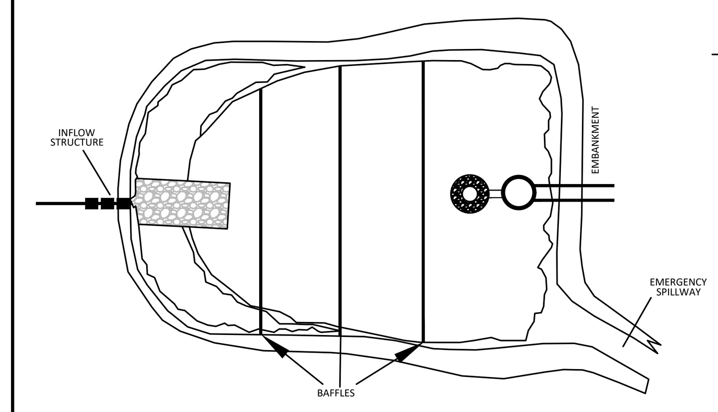

PLAN VIEW

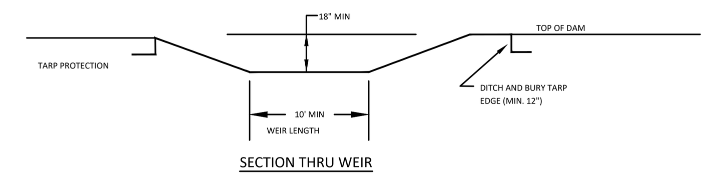

SECTION THRU WEIR

NOTE 1

HOLE SPECS:

DEWATERING HOLES WILL BE INSTALLED IN SETS OF HORIZONTAL RINGS. THE FIRST SET OF HOLES WILL BE SET 6 INCHES FROM THE BOTTOM OF THE RISER. RINGS WILL CONTINUE UP THE RISER IN INTERVALS OF 3 INCHES. HOLES WILL BE 3/4 INCH IN DIAMETER AND WILL BE SPACED EQUALLY AROUND THE RISER. THE NUMBER OF HOLES PER RING WILL EQUAL TO THE DRAINAGE AREA.

EXAMPLE
A BASIN DRAINING 2.0 ACRES SHOULD HAVE 2 HOLES PER RING EVERY 3 INCHES ON THE RISER PIPE. THE FIRST RING (2 HOLES) WILL BE SET 6 INCHES FROM THE BOTTOM OF THE RISER.

NOTE: ROUND DRAINAGE AREA TO THE NEAREST WHOLE NUMBER TO DETERMINE NUMBER OF HOLES.

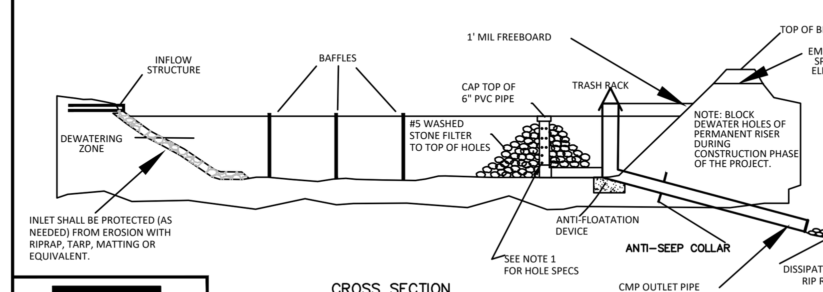

CROSS SECTION

GENERAL NOTES:
1) BASIN SHOULD BE CLEANED OUT WHEN CAPACITY REACHES AN ELEVATION REPRESENTING THAT THE BASIN IS HALF-FULL.
2) PROVIDE A MINIMUM OF THREE POROUS BAFFLES TO EVENLY DISTRIBUTE FLOW ACROSS THE BASIN, REDUCING TURBULENCE.
3) BAFFLE MATERIAL MUST BE SECURED AT THE BOTTOM AND SIDES USING STAPLES OR BY TRENCHING AS FOR A SILT FENCE.
4) MOST OF THE SEDIMENT WILL ACCUMULATE IN THE FIRST BAY, SO THIS SHOULD BE READILY AVAILABLE FOR MAINTENANCE.
5) THE TARP USED TO PROTECT THE WEIR SHALL BE THE WIDTH SPECIFIED. THE LENGTH OF THE TARP SHALL BE ACCORDING TO AVAILABLE SUPPLY. IF MULTIPLE TARPS ARE TO BE USED, THEN TARPS SHALL BE OVERLAPPED AT LEAST 12". THE UPSTREAM 12" TARP SHALL OVERLAP THE DOWNSTREAM TARP. THE TARP SHALL BE 50 MIL. HEAVY DUTY SILVER TARPAULINS OR EQUIVALENT FOR U.V. RESISTANCE.
6) DURING THE CONSTRUCTION PHASE OF THE PROJECT, PERMANENT STORMWATER RISER SHALL ONLY DEWATER FROM THE TOP OF PIPE.
7) POND SHALL NOT BE CONVERTED FOR STORMWATER USE UNTIL APPROVED BY ENVIRONMENTAL ENGINEER.

WAKE COUNTY NORTH CAROLINA
EFFECTIVE: 01/31/08

STANDARD CUSTOM BASIN ATTACHED TO PERMANENT RISER

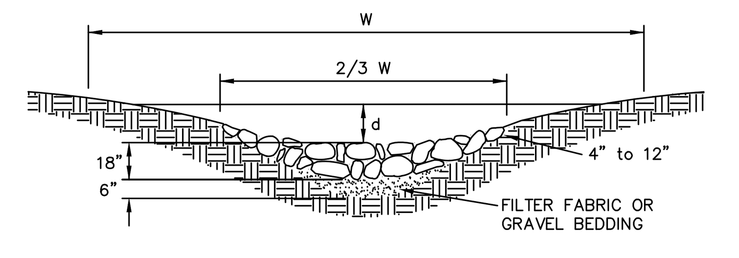

PARABOLIC–SHAPED WATERWAY WITH STONE CENTER DRAIN
(SHAPED BY BULLDOZER)

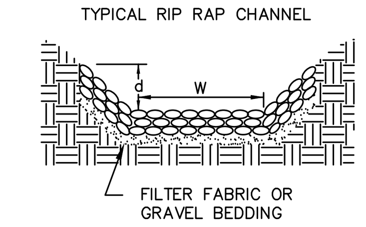

TRAPEZOIDAL

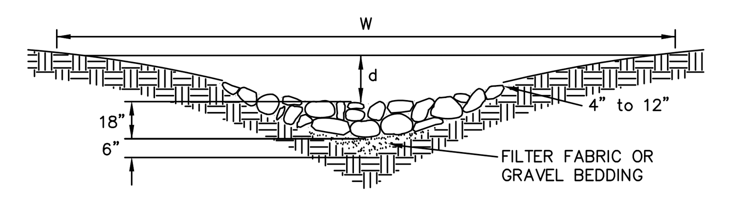

V–SHAPED WATERWAY WITH STONE CENTER DRAIN
(SHAPED BY MOTOR GRADER)

NOTES:

–TO BE USED WHERE EXCESSIVE STORMWATER VELOCITIES PROHIBIT VEGETATIVE LININGS.

–SIZE OF STONE MUST BE DETERMINED BY APPROPRIATE DESIGN PROCEDURE.

–DIMENSIONS FOR d & W VARIES ACCORDING TO DESIGN.

WAKE COUNTY NORTH CAROLINA
EFFECTIVE: 01/31/08

STANDARD RIP-RAP LINED CHANNELS

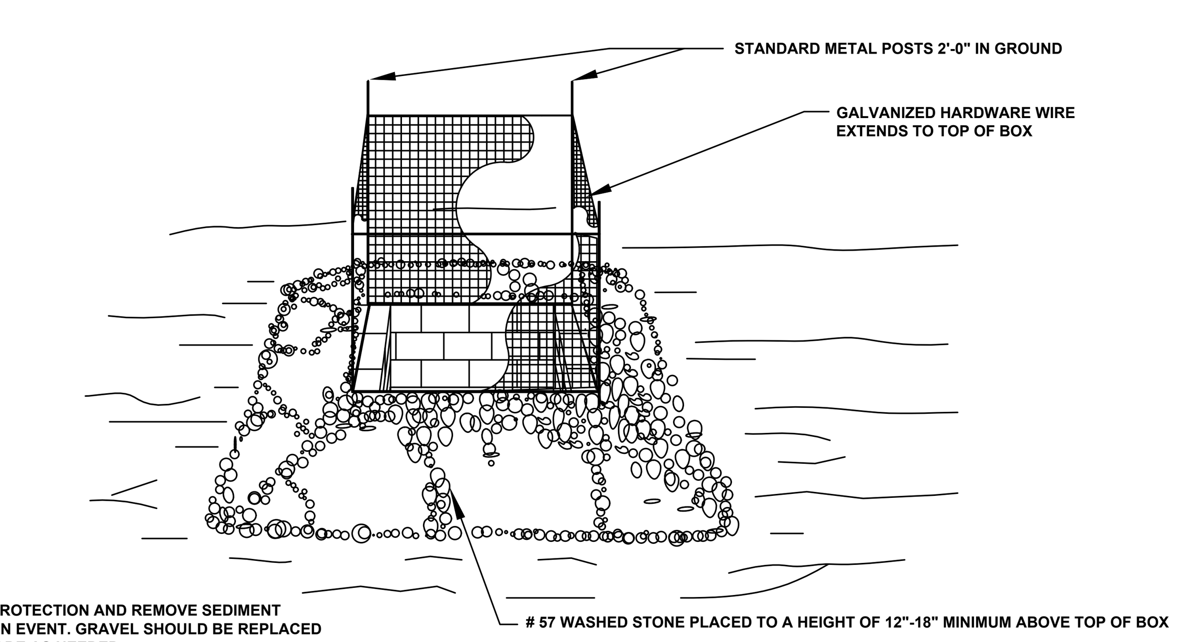

NOTE:

1. INSPECT INLET PROTECTION AND REMOVE SEDIMENT AFTER EACH RAIN EVENT. GRAVEL SHOULD BE REPLACED AND REPAIRS MADE AS NEEDED.

WAKE COUNTY NORTH CAROLINA
EFFECTIVE: 01/31/08

STANDARD GRAVEL YARD INLET PROTECTION

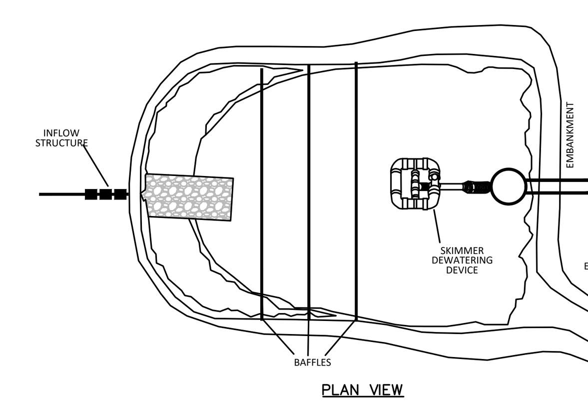

PLAN VIEW

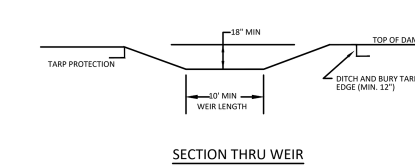

SECTION THRU WEIR

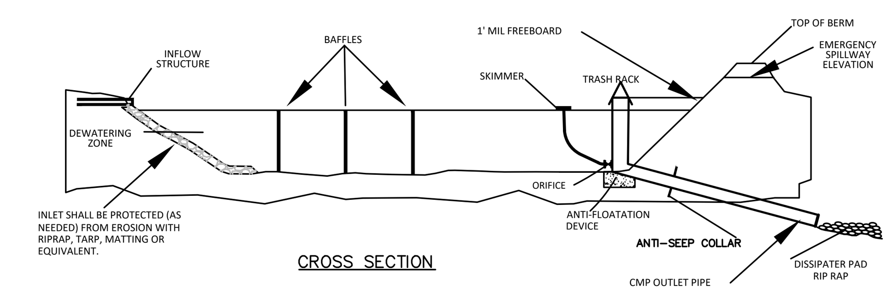

CROSS SECTION

NOTES:
1) BASIN SHOULD BE CLEANED OUT WHEN CAPACITY REACHES AN ELEVATION REPRESENTING THAT THE BASIN IS HALF-FULL.
2) THE TARP USED TO PROTECT THE WEIR SHALL BE THE WIDTH SPECIFIED. THE LENGTH OF THE TARP SHALL BE ACCORDING TO AVAILABLE SUPPLY. IF MULTIPLE TARPS ARE TO BE USED, THEN TARPS SHALL BE OVERLAPPED AT LEAST 12". THE UPSTREAM 12" TARP SHALL OVERLAP THE DOWNSTREAM TARP. THE TARP SHALL BE 50 MIL. HEAVY DUTY SILVER TARPAULINS OR EQUIVALENT FOR U.V. RESISTANCE.
3) PROVIDE A MINIMUM OF THREE POROUS BAFFLES TO EVENLY DISTRIBUTE FLOW ACROSS THE BASIN, REDUCING TURBULENCE.
4) BAFFLE MATERIAL MUST BE SECURED AT THE BOTTOM AND SIDES USING STAPLES OR BY TRENCHING AS FOR A SILT FENCE.
5) MOST OF THE SEDIMENT WILL ACCUMULATE IN THE FIRST BAY, SO THIS SHOULD BE READILY AVAILABLE FOR MAINTENANCE.
6) DURING THE CONSTRUCTION PHASE OF THE PROJECT, PERMANENT STORMWATER RISER SHALL ONLY DEWATER FROM THE TOP OF PIPE.
7) POND SHALL NOT BE CONVERTED FOR STORMWATER USE UNTIL APPROVED BY ENVIRONMENTAL ENGINEER.

WAKE COUNTY NORTH CAROLINA
EFFECTIVE: 01/31/08

STANDARD SKIMMER ATTACHED TO PERMANENT RISER

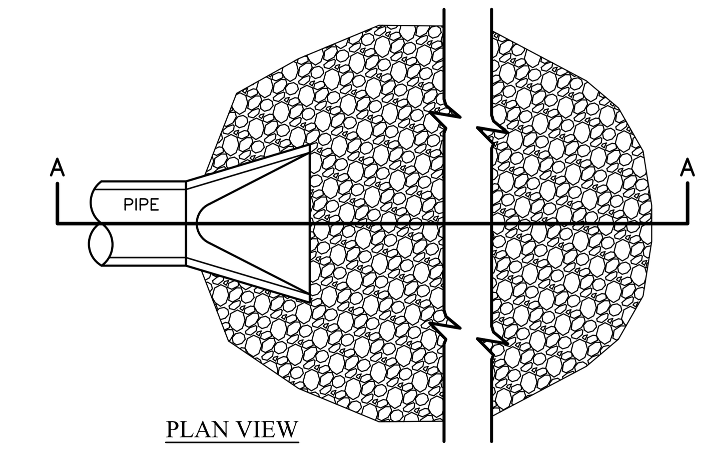

PLAN VIEW

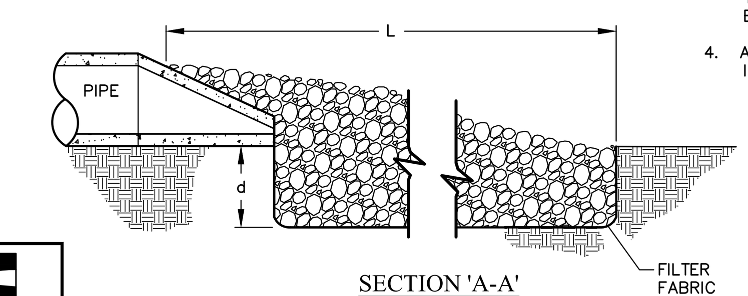

SECTION 'A-A'

NOTES:

1. L = THE LENGTH OF THE RIPRAP APRON.
2. d = 1.5 TIMES THE MAXIMUM STONE DIAMETER BUT NOT LESS THAN 6" (INCHES).
3. IN A WELL–DEFINED CHANNEL EXTEND THE APRON UP THE CHANNEL BANKS TO AN ELEVATION OF 6" (INCHES) ABOVE THE MAXIMUM TAILWATER DEPTH OR TO THE TOP OF THE BANK, WHICHEVER IS LESS.
4. A FILTER BLANKET OR FILTER FABRIC SHOULD BE INSTALLED BETWEEN THE RIPRAP AND SOIL FOUNDATION.

WAKE COUNTY NORTH CAROLINA
EFFECTIVE: 01/31/08

STANDARD PIPE OUTLET TO WELL-DEFINED CHANNEL

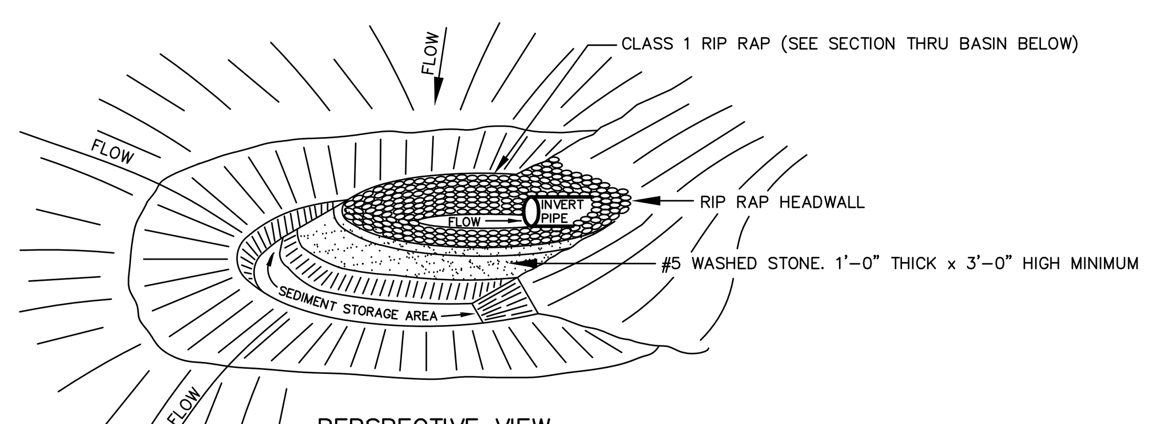

PERSPECTIVE VIEW
NO SCALE

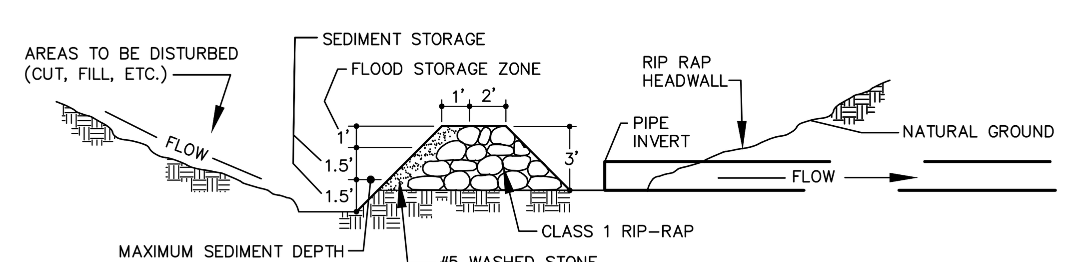

SECTION THRU CATCH BASIN, FILTER AND CULVERT PIPE
NO SCALE

WAKE COUNTY NORTH CAROLINA
EFFECTIVE: 01/31/08

STANDARD HORSESHOE INLET PROTECTION

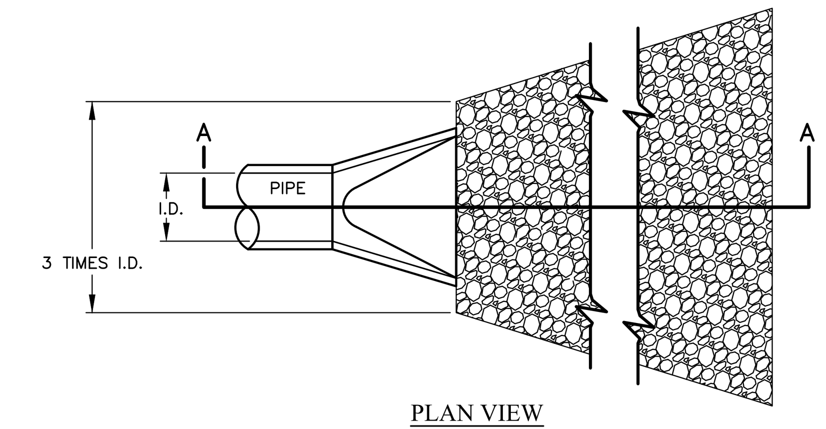

PLAN VIEW

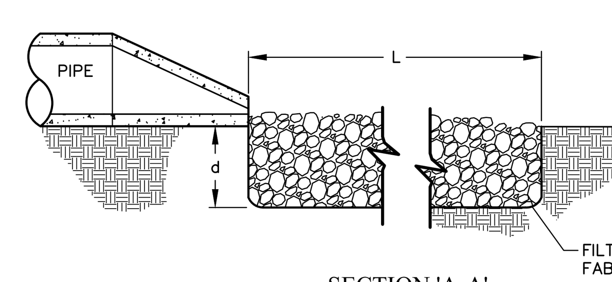

SECTION 'A-A'

NOTES:

1. L = THE LENGTH OF THE RIPRAP APRON.
2. d = 1.5 TIMES THE MAXIMUM STONE DIAMETER BUT NOT LESS THAN 6" (INCHES).
3. A FILTER BLANKET OR FILTER FABRIC SHOULD BE INSTALLED BETWEEN THE RIPRAP AND SOIL FOUNDATION.

WAKE COUNTY NORTH CAROLINA
EFFECTIVE: 01/31/08

STANDARD PIPE OUTLET TO FLAT AREA
NO WELL-DEFINED CHANNEL

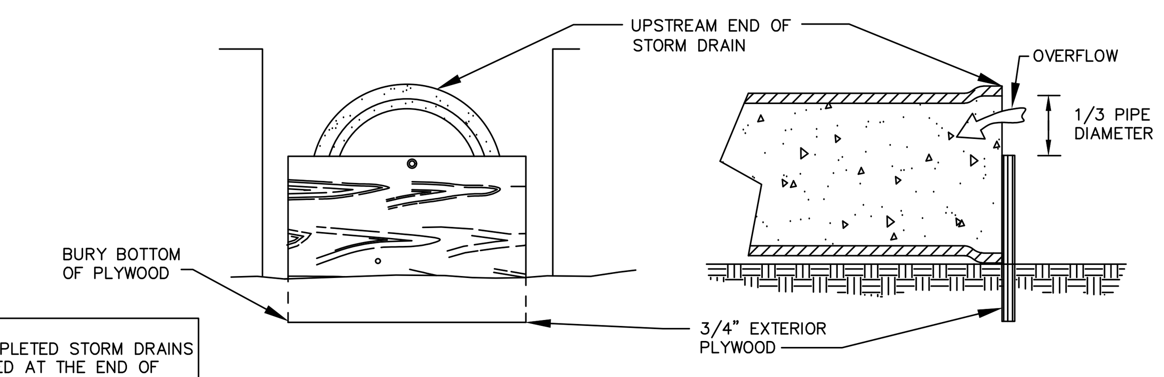

NOTE:
ALL PARTIALLY COMPLETED STORM DRAINS SHALL BE PROTECTED AT THE END OF EACH DAY IN ACCORDANCE WITH THESE DETAILS.

PLYWOOD INLET PROTECTION

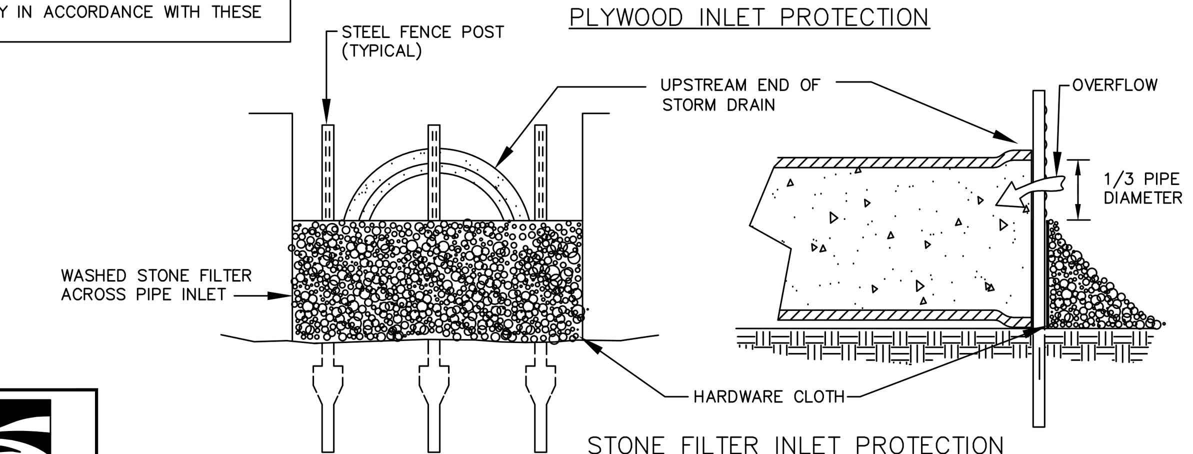

STONE FILTER INLET PROTECTION

WAKE COUNTY NORTH CAROLINA
EFFECTIVE: 01/31/08

STANDARD PIPE INLET PROTECTION (PLYWOOD & STONE)

CITY OF RALEIGH - PLANS AUTHORIZED FOR CONSTRUCTION

Electronic Approval: This approval is being issued electronically. This approval is valid only upon the signature of a City of Raleigh Review Officer below. The City will retain a copy of the approved plans. Any work authorized by this approval must proceed in accordance with the plans kept on file with the City. This electronic approval may not be edited once issued. Any modification to this approval once issued will invalidate this approval.

City of Raleigh Development Approval ______________________

Raleigh Water Review Officer

North Carolina 811
www.nc811.org
*** 3 Days Before Digging ***
North Carolina 811
811 or 1-800-632-4949
Remote Ticket Entry
http://nc811.org/remoteticketentry.htm

AMERICAN Engineering
American Engineering Associates - Southeast, P.A.
4020 Westchase Boulevard, Suite 450
Raleigh, NC 27607
919-469-1101

NORTH CAROLINA AMERICAN ENGINEERING ASSOCIATES SOUTHEAST C-3881 CERTIFICATE OF AUTHORIZATION

PRELIMINARY - DO NOT USE FOR CONSTRUCTION
NORTH CAROLINA PROFESSIONAL SEAL 56528 ENGINEER JAKOB P. KLEIN
Digitally signed by Jakob Klein Date: 2024.12.02 16:11:03 -05'00'

NO.	DATE	REVISION:

STIPULATION FOR REUSE

THIS DRAWING WAS PREPARED FOR USE ON THE SPECIFIC SITE, NAMED HEREON, CONTEMPORANEOUSLY WITH ITS ISSUE DATE AS LISTED, HEREON. AND IT IS NOT SUITABLE FOR USE ON A DIFFERENT PROJECT SITE OR AT A LATER TIME. USE OF THIS DRAWING FOR REFERENCE OR EXAMPLE ON ANOTHER PROJECT REQUIRES THE SERVICES OF PROPERLY LICENSED ARCHITECTS AND ENGINEERS. REPRODUCTION OF THIS DRAWING FOR REUSE ON ANOTHER PROJECT IS NOT AUTHORIZED AND MAY BE CONTRARY TO THE LAW.

THE PRESERVE AT MOODY FARM
ROLESVILLE ROAD
WAKE COUNTY, NC

JOB NUMBER: 21-002
CHECKED BY: JK
DRAWN BY: RC & SM
DATE: 12/02/2024

SHEET TITLE:
EROSION CONTROL DETAILS

SHEET NO.:
CD2

Z:\Jobs\21-002 Moody Development Tract (R210002)\dwg_Working Dwgs\Construction Set\CD1 Project Details.dwg
December 2, 2024

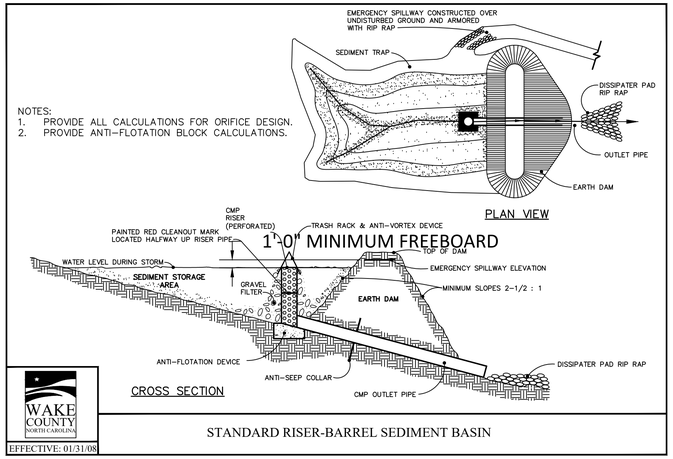

EFFECTIVE: 01/31/08

STANDARD RISER-BARREL SEDIMENT BASIN

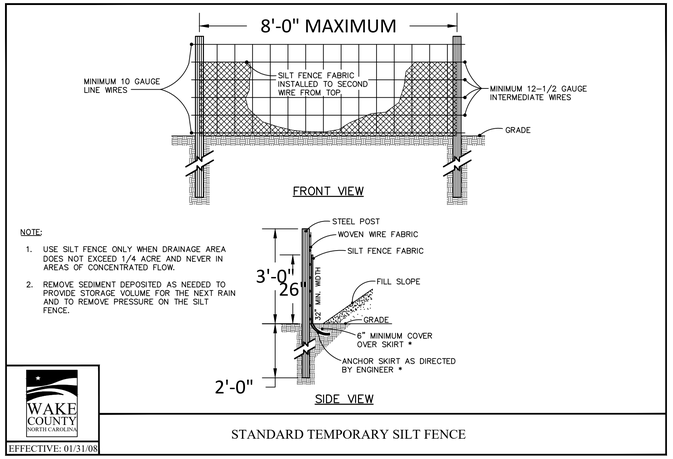

EFFECTIVE: 01/31/08

STANDARD TEMPORARY SILT FENCE

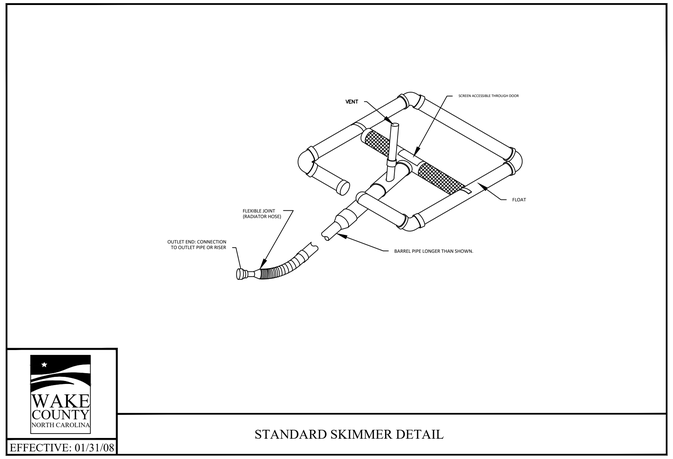

EFFECTIVE: 01/31/08

STANDARD SKIMMER DETAIL

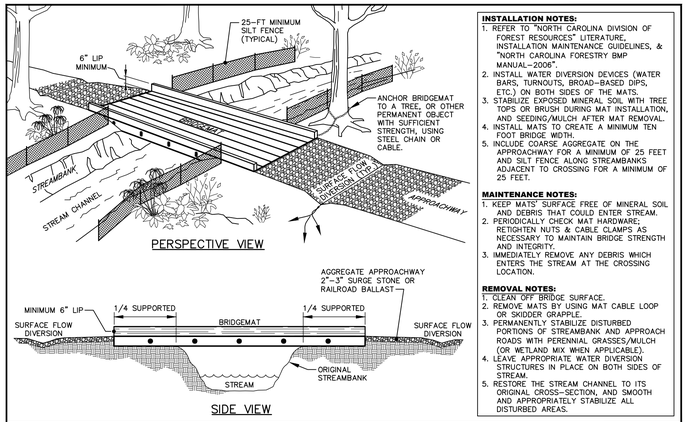

INSTALLATION NOTES:
1. REFER TO "NORTH CAROLINA DIVISION OF FOREST RESOURCES" LITERATURE, INSTALLATION MAINTENANCE GUIDELINES, & "NORTH CAROLINA FORESTRY BMP MANUAL-2006".
2. INSTALL WATER DIVERSION DEVICES (WATER BARS, TURNOUTS, BROAD-BASED DIPS, ETC.) ON BOTH SIDES OF THE MATS.
3. STABILIZE EXPOSED MINERAL SOIL WITH TREE TOPS OR BRUSH DURING MAT INSTALLATION, AND SEEDING/MULCH AFTER MAT REMOVAL.
4. INSTALL MATS TO CREATE A MINIMUM TEN FOOT BRIDGE WIDTH.
5. INCLUDE COARSE AGGREGATE ON THE APPROACHWAY FOR A MINIMUM OF 25 FEET AND SILT FENCE ALONG STREAMBANKS ADJACENT TO CROSSING FOR A MINIMUM OF 25 FEET.

MAINTENANCE NOTES:
1. KEEP MATS' SURFACE FREE OF MINERAL SOIL AND DEBRIS THAT COULD ENTER STREAM.
2. PERIODICALLY CHECK MAT HARDWARE; RETIGHTEN NUTS & CABLE CLAMPS AS NECESSARY TO MAINTAIN BRIDGE STRENGTH AND INTEGRITY.
3. IMMEDIATELY REMOVE ANY DEBRIS WHICH ENTERS THE STREAM AT THE CROSSING LOCATION.

REMOVAL NOTES:
1. CLEAN OFF BRIDGE SURFACE.
2. REMOVE MATS BY USING MAT CABLE LOOP OR SKIDDER GRAPPLE.
3. PERMANENTLY STABILIZE DISTURBED PORTIONS OF STREAMBANK AND APPROACH ROADS WITH PERENNIAL GRASSES/MULCH (OR WETLAND MIX WHEN APPLICABLE).
4. LEAVE APPROPRIATE WATER DIVERSION STRUCTURES IN PLACE ON BOTH SIDES OF STREAM.
5. RESTORE THE STREAM CHANNEL TO ITS ORIGINAL CROSS-SECTION, AND SMOOTH AND APPROPRIATELY STABILIZE ALL DISTURBED AREAS.

EFFECTIVE: 01/31/08

STANDARD TEMPORARY STREAM CROSSING OPTION

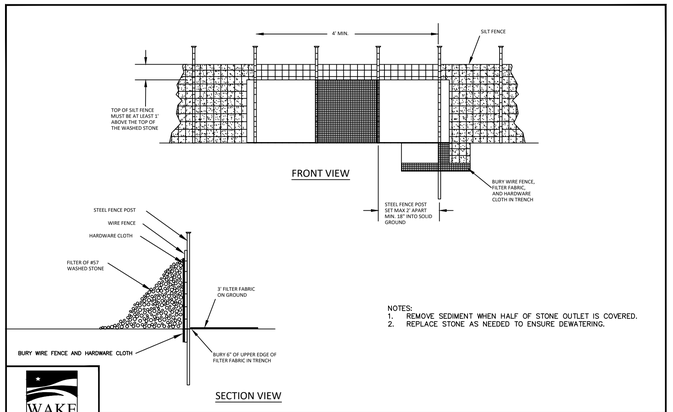

EFFECTIVE: 01/31/08

STANDARD SILT FENCE OUTLET

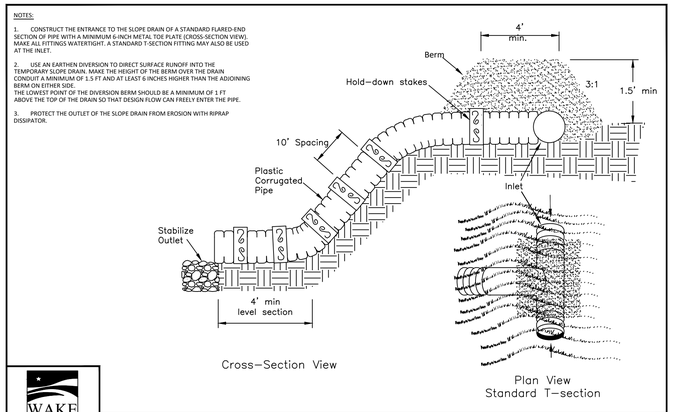

EFFECTIVE: 01/31/08

STANDARD TEMPORARY SLOPE DRAIN

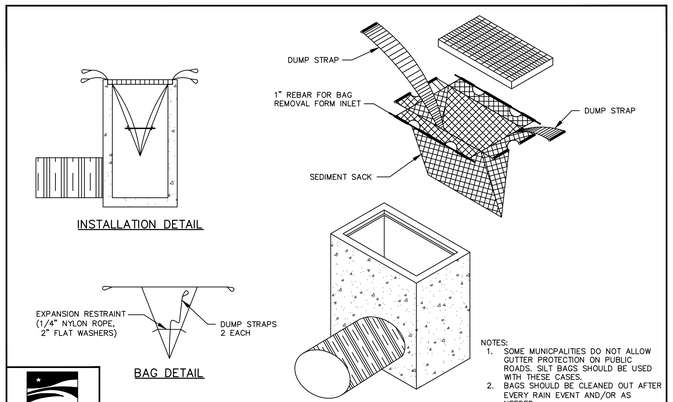

EFFECTIVE: 01/31/08

STANDARD SILT BAG - INLET SEDIMENT CONTROL DEVICE

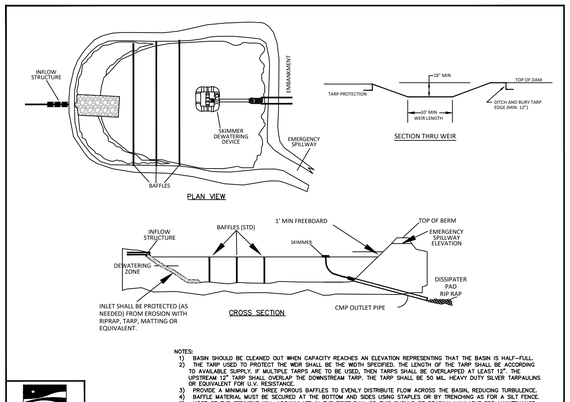

EFFECTIVE: 01/31/08

STANDARD SKIMMER BASIN

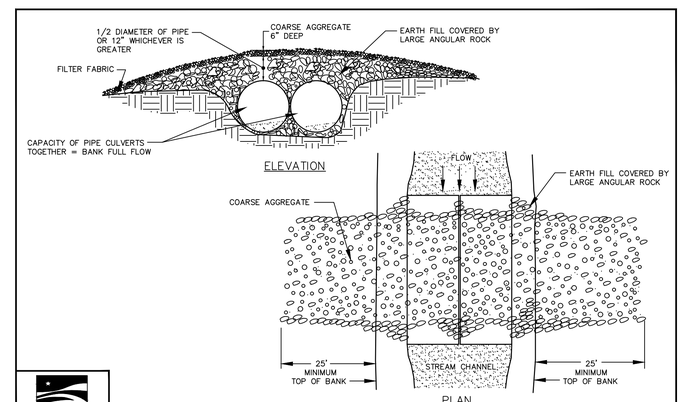

EFFECTIVE: 01/31/08

STANDARD TEMPORARY STREAM CROSSING

AMERICAN Engineering
American Engineering Associates - Southeast, P.A.
4020 Westchase Boulevard, Suite 450
Raleigh, NC 27607
919-469-1101

NORTH CAROLINA AMERICAN ENGINEERING ASSOCIATES SOUTHEAST C-3881 CERTIFICATE OF AUTHORIZATION

PRELIMINARY NOT FOR CONSTRUCTION

NO.	DATE	REVISION:

STIPULATION FOR REUSE

THIS DRAWING WAS PREPARED FOR USE ON THE SPECIFIC SITE, NAMED HEREON, CONTEMPORANEOUSLY WITH ITS ISSUE DATE AS LISTED, HEREON, AND IT IS NOT SUITABLE FOR USE ON A DIFFERENT PROJECT SITE OR AT A LATER TIME. USE OF THIS DRAWING FOR REFERENCE OR EXAMPLE ON ANOTHER PROJECT REQUIRES THE SERVICES OF PROPERLY LICENSED ARCHITECTS AND ENGINEERS. REPRODUCTION OF THIS DRAWING FOR REUSE ON ANOTHER PROJECT IS NOT AUTHORIZED AND MAY BE CONTRARY TO THE LAW.

THE PRESERVE AT MOODY FARM
ROLESVILLE ROAD
WAKE COUNTY, NC

JOB NUMBER: 21-002
CHECKED BY: JK
DRAWN BY: RC & SM
DATE: 12/02/2024

SHEET TITLE:
EROSION CONTROL DETAILS

SHEET NO.:
CD3

CITY OF RALEIGH - PLANS AUTHORIZED FOR CONSTRUCTION

Electronic Approval: This approval is being issued electronically. This approval is valid only upon the signature of a City of Raleigh Review Officer below. The City will retain a copy of the approved plans. Any work authorized by this approval must proceed in accordance with the plans kept on file with the City. This electronic approval may not be edited once issued. Any modification to this approval once issued will invalidate this approval.

City of Raleigh Development Approval _____

Raleigh Water Review Officer

North Carolina 811 Call Before You Dig
*** 3 Days Before Digging ***
North Carolina 811
811 or 1-800-632-4949
Remote Ticket Entry
http://nc811.org/remoteticketentry.htm

Z:\Jobs\21-002 Moody Development Trust (R210002)\dwg_Working Dwgs\Construction Set\CD1 Project Details.dwg December 2, 2024

STAPLE PATTERN GUIDE

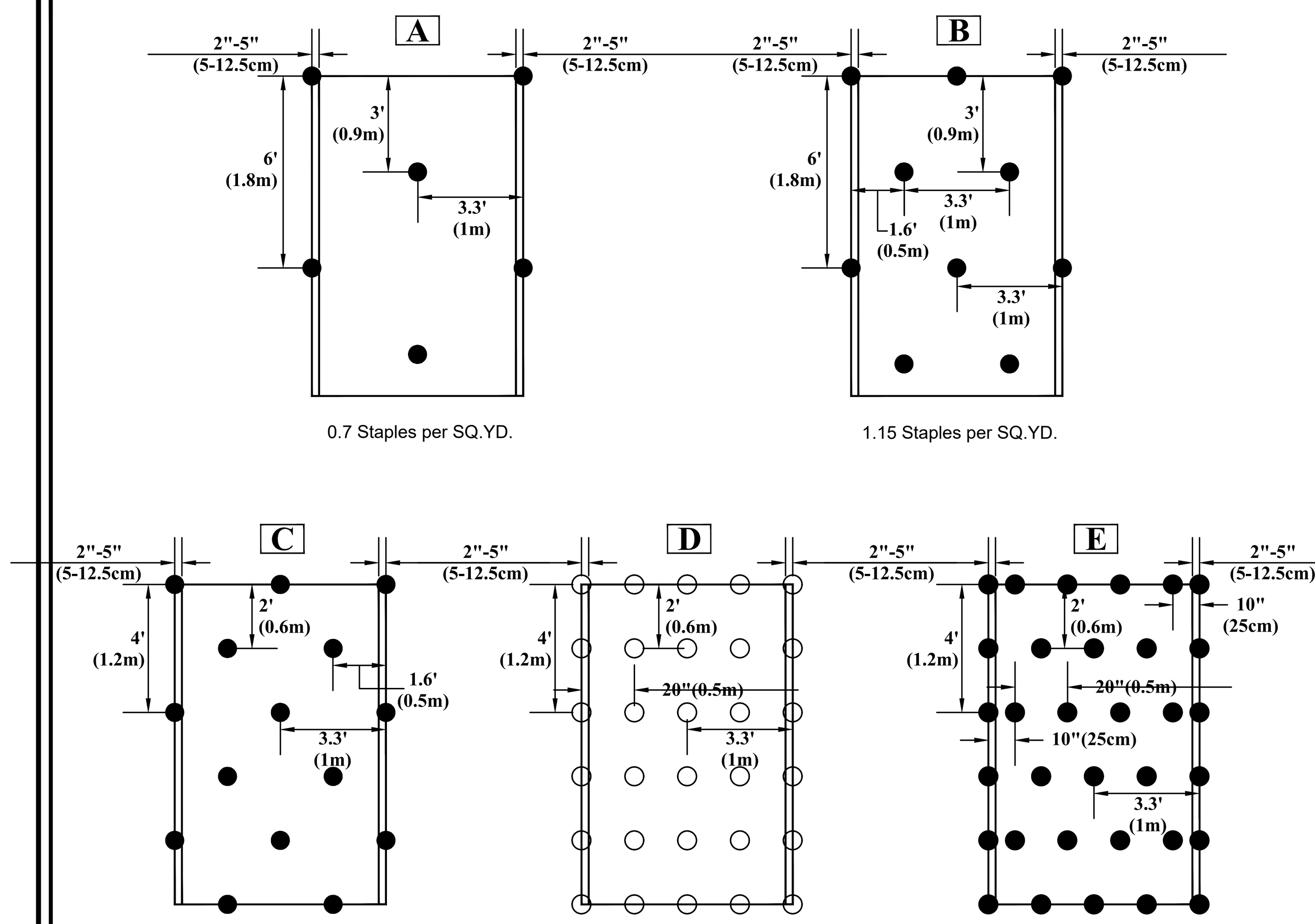

0.7 Staples per SQ.YD.

1.15 Staples per SQ.YD.

1.7 Staples per SQ.YD.

3.4 Staples per SQ.YD.

3.75 Staples per SQ.YD.

- ● 4:1 Slopes (A)
- ● 3:1 Slopes (B)
- ● 2:1 Slopes (C)
- ○ 1:1 & Steeper Slopes (D)
- ○ Medium/High Flow Channel (D)
- ● High Flow Channel And Shoreline (E)

NOTES:

* Use ECMDS® for more accurate staple pattern selection.

NORTH AMERICAN GREEN
5401 St. Wendel - Cynthiana Rd. PH: 800-722-2040
Poseyville, IN 47633 www.nagreen.com

Disclaimer:
The information presented herein is general design information only. For specific applications, consult an independent professional for further design guidance.

Drawn on: 5-4-17

Drawing Not To Scale

Figure 1. Minimum Anchor Pattern

Maximum Design Conditions			Anchor Pattern
Shear Stress	Velocity	Wave Heigth	
<= 6 lbs/ft2	<= 14 ft/s	6 in.	F
> 6-8 lbs/ft2	> 14-18 ft/s	12 in.	G
> 8 lbs/ft2	> 18 ft/s	18 in.	H

Figure 2. Minimum Anchor Type

Soil Type	Anchor Type
Clay-Clay Loam	10 in Wire Staple
Silt Loam - Loam	10 in Wire Staple
Sandy Loam	12 in Wire Staple
Sand / Muck <= 6 in	12in Rebar Staple
Sand / Muck 6-12 in	18 in Rebar Staple
Sand / Muck 12-18 in	24 in Earth Anchor + 12 in Rebar Staple
Sand / Muck > 18 in	36 in Earth Anchor = 18 in Rebar Staple

Figure 3. Anchor Patterns for use with Wire/Rebar Staples

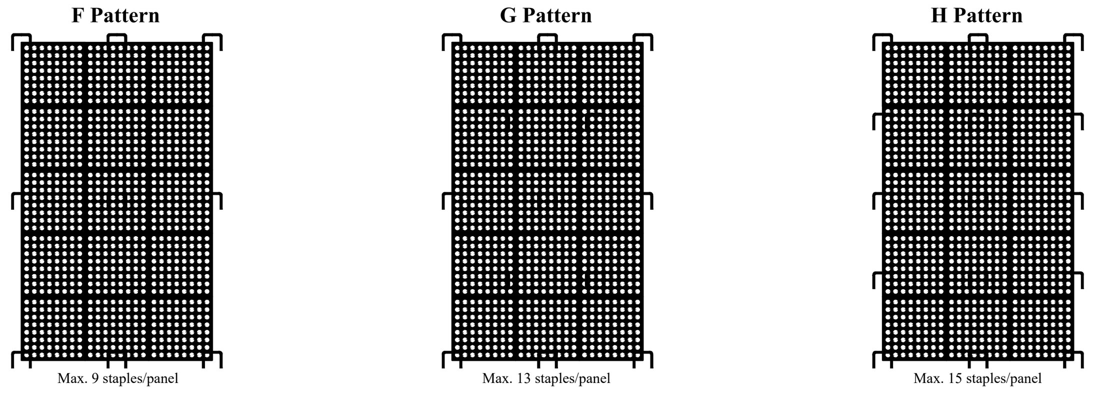

Figure 4. Anchor Patterns for use with Combination of Earth Anchors and Staples

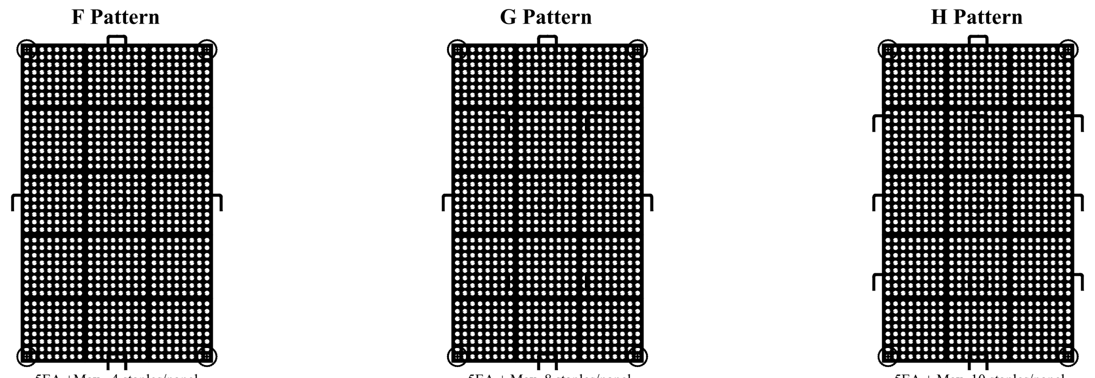

ShoreMax™

ANCHORING GUIDE

1. When installing ShoreMax mat, the anchor pattern (figure 3 or 4) should be selected based on the expected maximum design conditions (shear stress, velocity, or wave impact) (figure 1).
2. Anchor selection should be based on the soil type and pull-out strength required (figure 2). In soft, highly erodible soils percussion earth anchors may be necessary. Earth anchors can be installed in conjunction with rebar staples (figure 4).
3. When using percussion earth anchors, position anchors in each corner and the center of the panel. Place staples in the appropriate pattern through remainder of mat. Staples can be shared between two adjacent panels.

***Note:**
Number of staples used per panel can be reduced by 30-40% when sharing staples between panels.

⊓ - Wire/Rebar Staple

⊕ - Percussion Earth Anchor

NORTH AMERICAN GREEN
5401 St. Wendel - Cynthiana Rd. PH: 800-772-2040
Poseyville, IN 47633 www.nagreen.com

Disclaimer:
The information presented herein is general design information only. For specific applications, consult an independent professional for further design guidance.

Drawn on: 5-4-17

Drawing Not To Scale

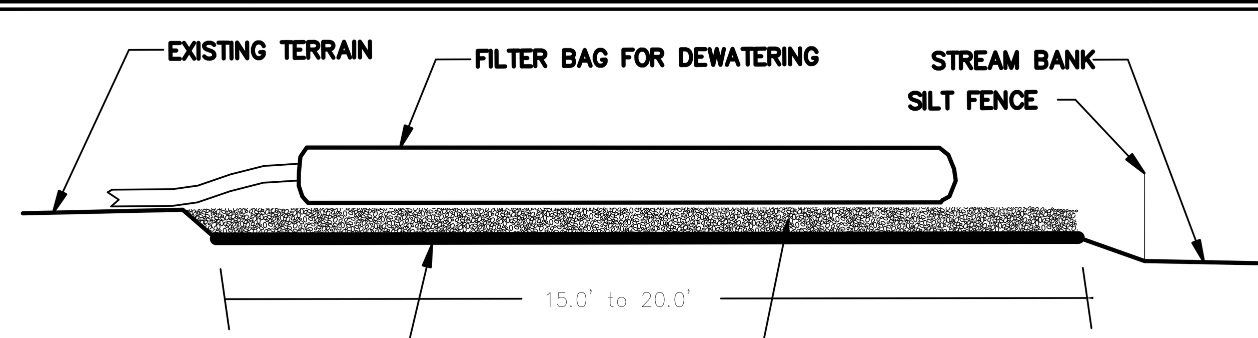

NOTES

PROVIDE STABILIZED OUTLET TO STREAM BANK. WOOD PALLETS MAY BE USED IN LIEU OF STONE AND GEOTEXTILE AS DIRECTED. A SUFFICIENT NUMBER OF PALLETS MUST BE PROVIDED TO ELEVATE THE ENTIRE FILTER BAG FOR DEWATERING ABOVE NATURAL GROUND.

NOT TO SCALE

WAKE COUNTY NORTH CAROLINA

EFFECTIVE: 01/31/08

STANDARD FILTER BAG FOR DEWATERING ACTIVITIES

December 2, 2024
Z:\Jobs\21-002 Moody Development Tract (R210002)\dwg_Working Dwgs\Construction Set\CD1 Project Details.dwg

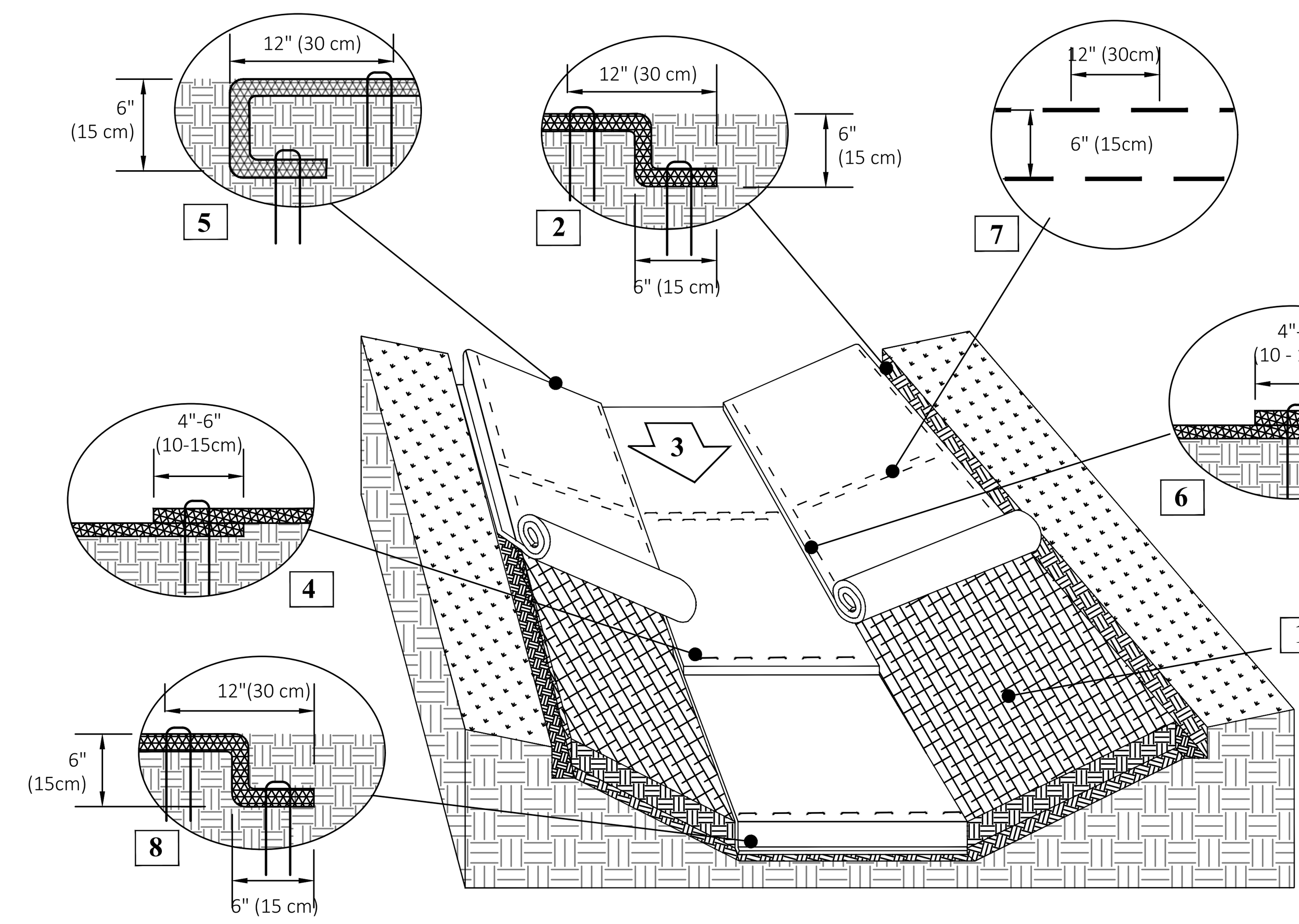

CRITICAL POINTS
A. Overlaps and Seams
B. Projected Water Line
C. Channel Bottom/Side Slope Vertices

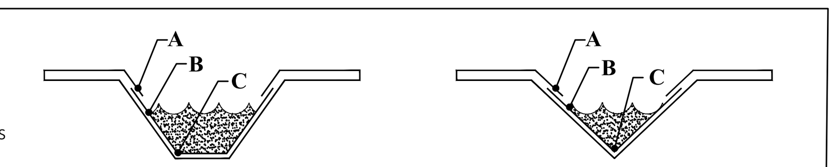

NOTES:
*Horizontal staple spacing should be altered if necessary to allow staples to secure the critical points along the channel surface.

Instructions

1. Prepare soil before installing rolled erosion control products (RECPs), including any necessary application of lime, fertilizer, and seed. Ground surface must be free of debris, rocks, clay clods and raked smooth sufficient to allow intimate contact of the RECP with the soil over the entirety of the installation.
2. Begin at the top of the channel by anchoring the RECPs in a 6" (15 cm) deep X 6" (15 cm) wide trench with approximately 12" (30 cm) of RECPs extended beyond the up-slope portion of the trench. Use ShoreMax mat at the channel/culvert outlet as supplemental scour protection as needed. Anchor the RECPs with a row of staples/stakes/pins approximately 12" (30 cm) apart in the bottom of the trench. Backfill and compact the trench after stapling. Apply seed to the compacted soil and fold the remaining 12" (30 cm) portion of RECPs back over the seed and compacted soil. Secure RECPs over compacted soil with a row of staples/stakes/pins spaced approximately 12" (30 cm) apart across the width of the RECPs.
3. Roll center RECPs in direction of water flow in bottom of channel. RECPs will unroll with appropriate side against the soil surface. All RECPs must be securely fastened to soil surface by placing staples/stakes/pins in appropriate locations as shown in the staple pattern guide.
4. Place consecutive RECPs end-over-end (Shingle style) with a 4"- 6" (10 - 15 cm) overlap. Use a double row of staples staggered 4" apart and 4" on center to secure RECPs.
5. Full length edge of RECPs at top of side slopes must be anchored with a row of staples/stakes/pins spaced at S_T apart in a 6" (15 cm) deep X 6"(15 cm) wide trench. Backfill and compact the trench after stapling.
6. Adjacent RECPs must be overlapped approximately 4"- 6" (10 - 15 cm) and secured with staples/stakes/pins at S_T.
7. In high flow channel applications a staple check slot is recommended at 30 to 40 foot (9 -12m) intervals. Use a double row of staples staggered 6" (15 cm) apart and 12" (30 cm) on center over entire width of the channel.
8. The terminal end of the RECPs must be anchored with a row of staples/stakes/pins spaced at S_T apart in a 6" (15 cm) deep X 6" (15 cm) wide trench. Backfill and compact the trench after stapling.
9. Fasteners should provide a minimum of twenty pounds of pullout resistance. Six-inch (10 cm) X one-inch (2.5 cm) eleven gauge staples are typically adequate. In loose soils, longer staples may be necessary, twist pins can provide the greatest pullout resistance. In hard or rocky soils, straight pins may by used where staples or twist pins are refused, provided the minimum pullout requirements are met. Bio-degradable fasteners shall not be used with VMax (TRM) or TMax (HPTRM) materials.

Staple Pattern Guide

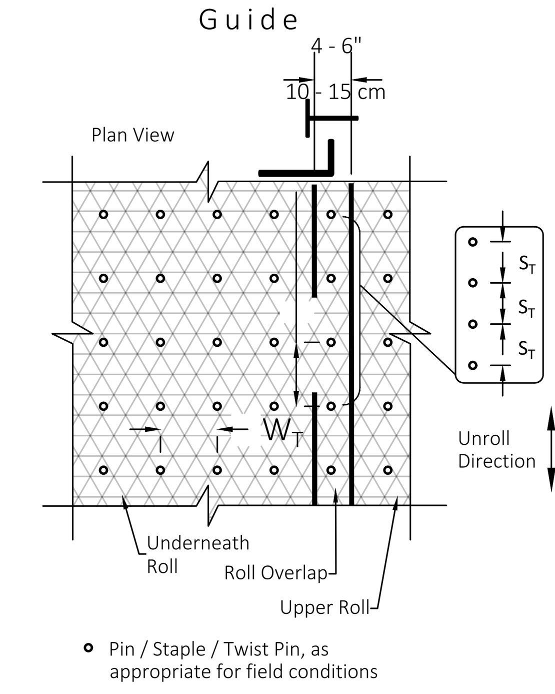

○ Pin / Staple / Twist Pin, as appropriate for field conditions

	Staple Pattern
Dimension	E
W_T	20" (50 cm)
L_T	20" (50 cm)
S_T	18" (45 cm)
Nominal Frequency	3.8 / SY

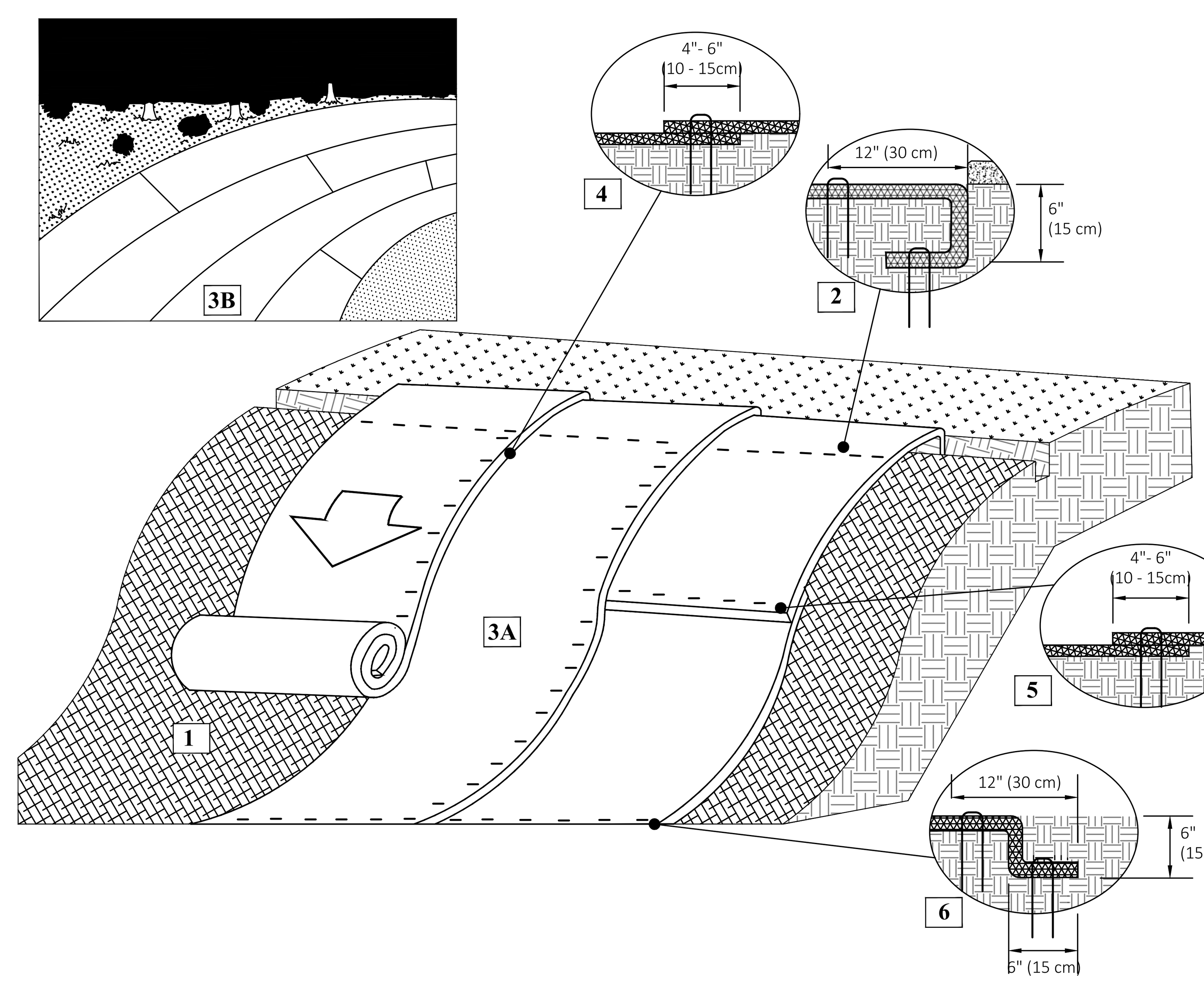

Instructions

1. Prepare soil before installing rolled erosion control products (RECPs), including any necessary application of lime, fertilizer, and seed. Ground surface must be free of debris, rocks, clay clods and raked smooth sufficient to allow intimate contact of the RECP with the soil over the entirety of the installation.
2. Begin at the top of the slope by anchoring the RECPs in a 6" (15 cm) deep X 6" (15 cm) wide trench. Anchor the RECPs with a row of staples/stakes/pins spaced at S_T apart in the bottom of the trench. Backfill and compact the trench after stapling and fold the roll over downslope. Secure RECPs over compacted soil with a row of staples/stakes/pins spaced at S_T apart across the width of the RECPs.
3. Roll the RECPs (A) down or (B) horizontally across the slope. RECPs will unroll with appropriate side against the soil surface. All RECPs must be securely fastened to soil surface by placing staples/stakes/pins in appropriate locations as shown in the staple pattern guide. RollMax RECPs and ECBs should utilize Staple Pattern C, TRMs and VMax materials should utilize Staple Pattern D.
4. The edges of parallel RECPs must be stapled with approximately 4" - 6" (10 - 15 cm) overlap.
5. Consecutive RECPs spliced down the slope must overlapped with the upstream mat atop the downstream mat (shingle style). The overlap should be 4" - 6" (10 - 15 cm).
6. At the terminal end, secure each mat across the width with a row of staples/stakes/pins spaced at S_T. If exposed to flow, foot traffic, wind uplift or other disruption, trench the terminal end in as shown in detail.
7. Fasteners should provide a minimum of twenty pounds of pullout resistance. Six-inch (10 cm) X one-inch (2.5 cm) eleven gauge staples are typically adequate. In loose soils, longer staples may be necessary, twist pins can provide the greatest pullout resistance. In hard or rocky soils, straight pins may by used where staples or twist pins are refused, provided the minimum pullout requirements are met. Bio-degradable fasteners shall not be used with VMax (TRM) or TMax (HPTRM) materials.

Staple Pattern Guide

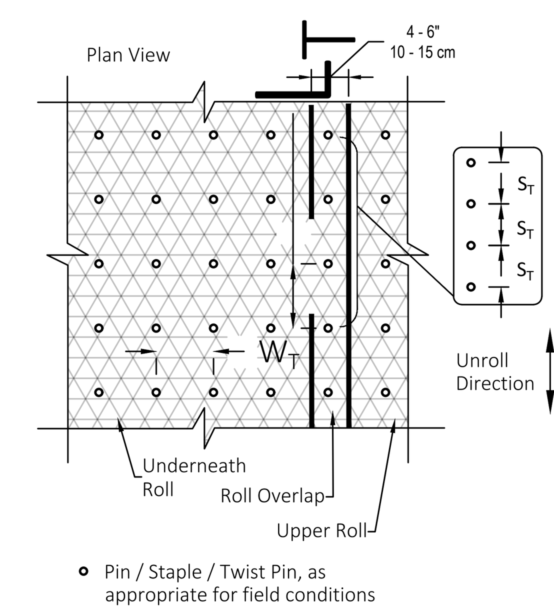

○ Pin / Staple / Twist Pin, as appropriate for field conditions

	Staple Pattern	
Dimension	C	D
W_T	30" (75 cm)	24" (60 cm)
L_T	30" (75 cm)	20" (50 cm)
S_T	18" (45 cm)	18" (45 cm)
Nominal Frequency	1.7 / SY	3.0 / SY
Application	ECB (Degradable)	TRM (Permanent)

*Note: Staple Pattern A and B used prior to 8/2019 have been discontinued.

CITY OF RALEIGH - PLANS AUTHORIZED FOR CONSTRUCTION

Electronic Approval: This approval is being issued electronically. This approval is valid only upon the signature of a City of Raleigh Review Officer below. The City will retain a copy of the approved plans. Any work authorized by this approval must proceed in accordance with the plans kept on file with the City. This electronic approval may not be edited once issued. Any modification to this approval once issued will invalidate this approval.

City of Raleigh Development Approval ______________________

Raleigh Water Review Officer

North Carolina 811
www.nc811.org
*** 3 Days Before Digging ***
North Carolina 811
811 or 1-800-632-4949
Remote Ticket Entry
http://nc811.org/remoteticketentry.htm

AMERICAN Engineering
American Engineering Associates - Southeast, P.A.
4020 Westchase Boulevard, Suite 450
Raleigh, NC 27607
919-469-1101

NORTH CAROLINA AMERICAN ENGINEERING ASSOCIATES SOUTHEAST C-3881 CERTIFICATE OF AUTHORIZATION

PRELIMINARY - DO NOT USE FOR CONSTRUCTION
NORTH CAROLINA PROFESSIONAL SEAL 56528 ENGINEER JAKOB P. KLEIN
Digitally signed by Jakob Klein
Date: 2024.12.02 16:11:06 -05'00'

NO.	DATE	REVISION:

STIPULATION FOR REUSE

THIS DRAWING WAS PREPARED FOR USE ON THE SPECIFIC SITE, NAMED HEREON, CONTEMPORANEOUSLY WITH ITS ISSUE DATE AS LISTED, HEREON. AND IT IS NOT SUITABLE FOR USE ON A DIFFERENT PROJECT SITE OR AT A LATER TIME. USE OF THIS DRAWING FOR REFERENCE OR EXAMPLE ON ANOTHER PROJECT REQUIRES THE SERVICES OF PROPERLY LICENSED ARCHITECTS AND ENGINEERS. REPRODUCTION OF THIS DRAWING FOR REUSE ON ANOTHER PROJECT IS NOT AUTHORIZED AND MAY BE CONTRARY TO THE LAW.

THE PRESERVE AT MOODY FARM
ROLESVILLE ROAD WAKE COUNTY, NC

JOB NUMBER: 21-002
CHECKED BY: JK
DRAWN BY: RC & SM
DATE: 12/02/2024

SHEET TITLE:
EROSION CONTROL DETAILS

SHEET NO.:
CD4

ONSITE CONCRETE WASHOUT STRUCTURE WITH LINER

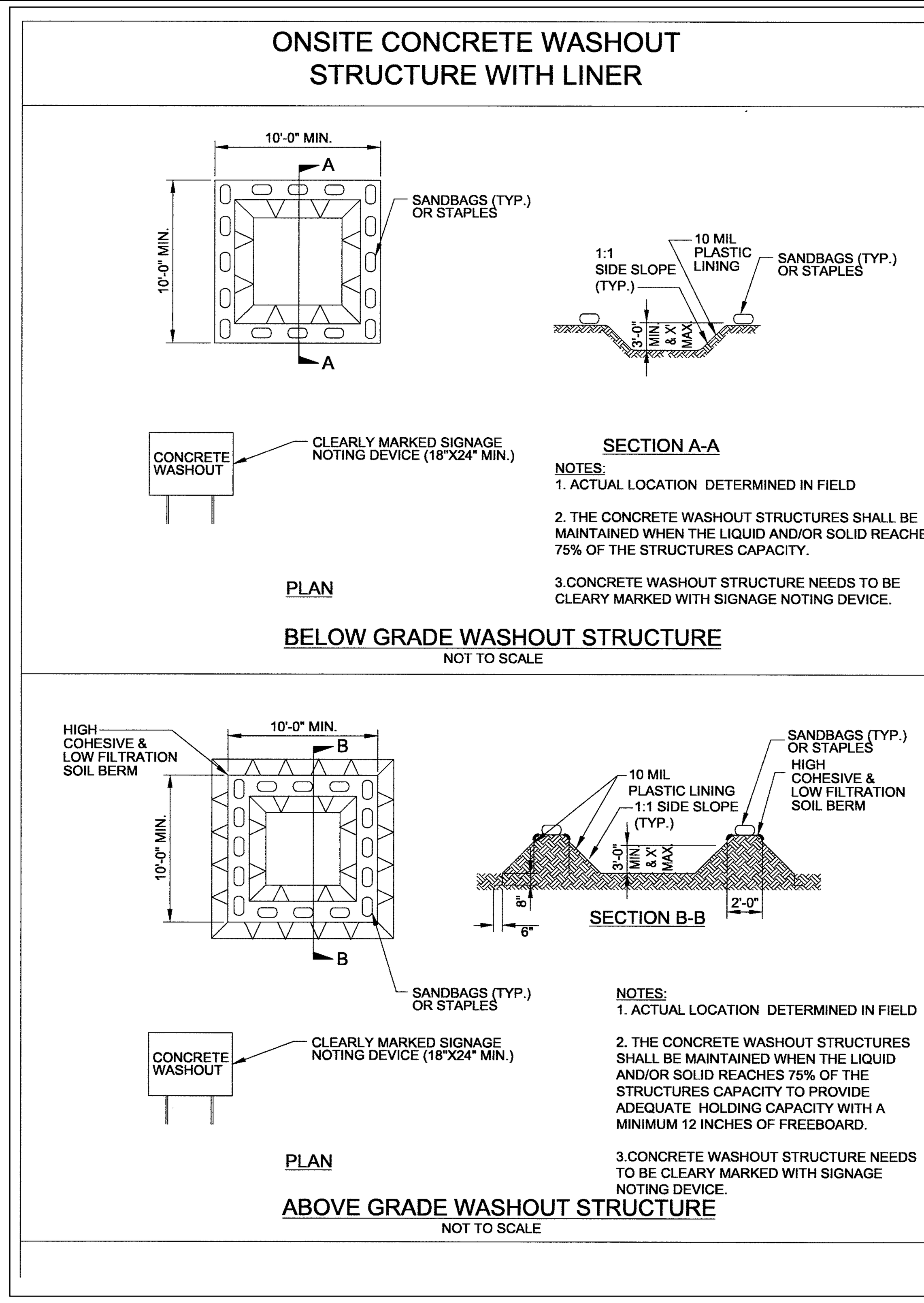

PART III
SELF-INSPECTION, RECORDKEEPING AND REPORTING

SECTION A: SELF-INSPECTION

Self-inspections are required during normal business hours in accordance with the table below. When adverse weather or site conditions would cause the safety of the inspection personnel to be in jeopardy, the inspection may be delayed until the next business day on which it is safe to perform the inspection. In addition, when a storm event of equal to or greater than 1.0 inch occurs outside of normal business hours, the self-inspection shall be performed upon the commencement of the next business day. Any time when inspections were delayed shall be noted in the Inspection Record.

Inspect	Frequency (during normal business hours)	Inspection records must include:
(1) Rain gauge maintained in good working order	Daily	Daily rainfall amounts. If no daily rain gauge observations are made during weekend or holiday periods, and no individual-day rainfall information is available, record the cumulative rain measurement for those unattended days (and this will determine if a site inspection is needed). Days on which no rainfall occurred shall be recorded as "zero." The permittee may use another rain-monitoring device approved by the Division.
(2) E&SC Measures	At least once per 7 calendar days and within 24 hours of a rain event ≥ 1.0 inch in 24 hours	1. Identification of the measures inspected, 2. Date and time of the inspection, 3. Name of the person performing the inspection, 4. Indication of whether the measures were operating properly, 5. Description of maintenance needs for the measure, 6. Description, evidence, and date of corrective actions taken.
(3) Stormwater discharge outfalls (SDOs)	At least once per 7 calendar days and within 24 hours of a rain event ≥ 1.0 inch in 24 hours	1. Identification of the discharge outfalls inspected, 2. Date and time of the inspection, 3. Name of the person performing the inspection, 4. Evidence of indicators of stormwater pollution such as oil sheen, floating or suspended solids or discoloration, 5. Indication of visible sediment leaving the site, 6. Description, evidence, and date of corrective actions taken.
(4) Perimeter of site	At least once per 7 calendar days and within 24 hours of a rain event ≥ 1.0 inch in 24 hours	If visible sedimentation is found outside site limits, then a record of the following shall be made: 1. Actions taken to clean up or stabilize the sediment that has left the site limits, 2. Description, evidence, and date of corrective actions taken, and 3. An explanation as to the actions taken to control future releases.
(5) Streams or wetlands onsite or offsite (where accessible)	At least once per 7 calendar days and within 24 hours of a rain event ≥ 1.0 inch in 24 hours	If the stream or wetland has increased visible sedimentation or a stream has visible increased turbidity from the construction activity, then a record of the following shall be made: 1. Description, evidence and date of corrective actions taken, and 2. Records of the required reports to the appropriate Division Regional Office per Part III, Section C, Item (2)(a) of this permit.
(6) Ground stabilization measures	After each phase of grading	1. The phase of grading (installation of perimeter E&SC measures, clearing and grubbing, installation of storm drainage facilities, completion of all land-disturbing activity, construction or redevelopment, permanent ground cover). 2. Documentation that the required ground stabilization measures have been provided within the required timeframe or an assurance that they will be provided as soon as possible.

NOTE: The rain inspection resets the required 7 calendar day inspection requirement.

PART III
SELF-INSPECTION, RECORDKEEPING AND REPORTING

SECTION B: RECORDKEEPING

1. E&SC Plan Documentation

The approved E&SC plan as well as any approved deviation shall be kept on the site. The approved E&SC plan must be kept up-to-date throughout the coverage under this permit. The following items pertaining to the E&SC plan shall be kept on site and available for inspection at all times during normal business hours.

Item to Document	Documentation Requirements
(a) Each E&SC measure has been installed and does not significantly deviate from the locations, dimensions and relative elevations shown on the approved E&SC plan.	Initial and date each E&SC measure on a copy of the approved E&SC plan or complete, date and sign an inspection report that lists each E&SC measure shown on the approved E&SC plan. This documentation is required upon the initial installation of the E&SC measures or if the E&SC measures are modified after initial installation.
(b) A phase of grading has been completed.	Initial and date a copy of the approved E&SC plan or complete, date and sign an inspection report to indicate completion of the construction phase.
(c) Ground cover is located and installed in accordance with the approved E&SC plan.	Initial and date a copy of the approved E&SC plan or complete, date and sign an inspection report to indicate compliance with approved ground cover specifications.
(d) The maintenance and repair requirements for all E&SC measures have been performed.	Complete, date and sign an inspection report.
(e) Corrective actions have been taken to E&SC measures.	Initial and date a copy of the approved E&SC plan or complete, date and sign an inspection report to indicate the completion of the corrective action.

2. Additional Documentation to be Kept on Site

In addition to the E&SC plan documents above, the following items shall be kept on the site and available for inspectors at all times during normal business hours, unless the Division provides a site-specific exemption based on unique site conditions that make this requirement not practical:

(a) This General Permit as well as the Certificate of Coverage, after it is received.

(b) Records of inspections made during the previous twelve months. The permittee shall record the required observations on the Inspection Record Form provided by the Division or a similar inspection form that includes all the required elements. Use of electronically-available records in lieu of the required paper copies will be allowed if shown to provide equal access and utility as the hard-copy records.

3. Documentation to be Retained for Three Years

All data used to complete the e-NOI and all inspection records shall be maintained for a period of three years after project completion and made available upon request. [40 CFR 122.41]

PART III
SELF-INSPECTION, RECORDKEEPING AND REPORTING

SECTION C: REPORTING

1. Occurrences that Must be Reported

Permittees shall report the following occurrences:

(a) Visible sediment deposition in a stream or wetland.

(b) Oil spills if:
- They are 25 gallons or more,
- They are less than 25 gallons but cannot be cleaned up within 24 hours,
- They cause sheen on surface waters (regardless of volume), or
- They are within 100 feet of surface waters (regardless of volume).

(c) Releases of hazardous substances in excess of reportable quantities under Section 311 of the Clean Water Act (Ref: 40 CFR 110.3 and 40 CFR 117.3) or Section 102 of CERCLA (Ref: 40 CFR 302.4) or G.S. 143-215.85.

(d) Anticipated bypasses and unanticipated bypasses.

(e) Noncompliance with the conditions of this permit that may endanger health or the environment.

2. Reporting Timeframes and Other Requirements

After a permittee becomes aware of an occurrence that must be reported, he shall contact the appropriate Division regional office within the timeframes and in accordance with the other requirements listed below. Occurrences outside normal business hours may also be reported to the Department's Environmental Emergency Center personnel at (800) 858-0368.

Occurrence	Reporting Timeframes (After Discovery) and Other Requirements
(a) Visible sediment deposition in a stream or wetland	• ***Within 24 hours***, an oral or electronic notification. • ***Within 7 calendar days***, a report that contains a description of the sediment and actions taken to address the cause of the deposition. Division staff may waive the requirement for a written report on a case-by-case basis. • If the stream is named on the NC 303(d) list as impaired for sediment-related causes, the permittee may be required to perform additional monitoring, inspections or apply more stringent practices if staff determine that additional requirements are needed to assure compliance with the federal or state impaired-waters conditions.
(b) Oil spills and release of hazardous substances per Item 1(b)-(c) above	• ***Within 24 hours***, an oral or electronic notification. The notification shall include information about the date, time, nature, volume and location of the spill or release.
(c) Anticipated bypasses [40 CFR 122.41(m)(3)]	• ***A report at least ten days before the date of the bypass, if possible.*** The report shall include an evaluation of the anticipated quality and effect of the bypass.
(d) Unanticipated bypasses [40 CFR 122.41(m)(3)]	• ***Within 24 hours***, an oral or electronic notification. • ***Within 7 calendar days,*** a report that includes an evaluation of the quality and effect of the bypass.
(e) Noncompliance with the conditions of this permit that may endanger health or the environment[40 CFR 122.41(l)(7)]	• ***Within 24 hours***, an oral or electronic notification. • ***Within 7 calendar days***, a report that contains a description of the noncompliance, and its causes; the period of noncompliance, including exact dates and times, and if the noncompliance has not been corrected, the anticipated time noncompliance is expected to continue; and steps taken or planned to reduce, eliminate, and prevent reoccurrence of the noncompliance. [40 CFR 122.41(l)(6). • Division staff may waive the requirement for a written report on a case-by-case basis.

PART II, SECTION G, ITEM (4)
DRAW DOWN OF SEDIMENT BASINS FOR MAINTENANCE OR CLOSE OUT

Sediment basins and traps that receive runoff from drainage areas of one acre or more shall use outlet structures that withdraw water from the surface when these devices need to be drawn down for maintenance or close out unless this is infeasible. The circumstances in which it is not feasible to withdraw water from the surface shall be rare (for example, times with extended cold weather). Non-surface withdrawals from sediment basins shall be allowed only when all of the following criteria have been met:

(a) The E&SC plan authority has been provided with documentation of the non-surface withdrawal and the specific time periods or conditions in which it will occur. The non-surface withdrawal shall not commence until the E&SC plan authority has approved these items,
(b) The non-surface withdrawal has been reported as an anticipated bypass in accordance with Part III, Section C, Item (2)(c) and (d) of this permit,
(c) Dewatering discharges are treated with controls to minimize discharges of pollutants from stormwater that is removed from the sediment basin. Examples of appropriate controls include properly sited, designed and maintained dewatering tanks, weir tanks, and filtration systems,
(d) Vegetated, upland areas of the sites or a properly designed stone pad is used to the extent feasible at the outlet of the dewatering treatment devices described in Item (c) above,
(e) Velocity dissipation devices such as check dams, sediment traps, and riprap are provided at the discharge points of all dewatering devices, and
(f) Sediment removed from the dewatering treatment devices described in Item (c) above is disposed of in a manner that does not cause deposition of sediment into waters of the United States.

NCG01 SELF-INSPECTION, RECORDKEEPING AND REPORTING

EFFECTIVE: 04/01/19

GROUND STABILIZATION AND MATERIALS HANDLING PRACTICES FOR COMPLIANCE WITH THE NCG01 CONSTRUCTION GENERAL PERMIT

Implementing the details and specifications on this plan sheet will result in the construction activity being considered compliant with the Ground Stabilization and Materials Handling sections of the NCG01 Construction General Permit (Sections E and F, respectively). The permittee shall comply with the Erosion and Sediment Control plan approved by the delegated authority having jurisdiction. All details and specifications shown on this sheet may not apply depending on site conditions and the delegated authority having jurisdiction.

SECTION E: GROUND STABILIZATION

Required Ground Stabilization Timeframes

Site Area Description	Stabilize within this many calendar days after ceasing land disturbance	Timeframe variations
(a) Perimeter dikes, swales, ditches, and perimeter slopes	7	None
(b) High Quality Water (HQW) Zones	7	None
(c) Slopes steeper than 3:1	7	If slopes are 10' or less in length and are not steeper than 2:1, 14 days are allowed
(d) Slopes 3:1 to 4:1	14	-7 days for slopes greater than 50' in length and with slopes steeper than 4:1 -7 days for perimeter dikes, swales, ditches, perimeter slopes and HQW Zones -10 days for Falls Lake Watershed
(e) Areas with slopes flatter than 4:1	14	-7 days for perimeter dikes, swales, ditches, perimeter slopes and HQW Zones -10 days for Falls Lake Watershed unless there is zero slope

Note: After the permanent cessation of construction activities, any areas with temporary ground stabilization shall be converted to permanent ground stabilization as soon as practicable but in no case longer than 90 calendar days after the last land disturbing activity. Temporary ground stabilization shall be maintained in a manner to render the surface stable against accelerated erosion until permanent ground stabilization is achieved.

GROUND STABILIZATION SPECIFICATION

Stabilize the ground sufficiently so that rain will not dislodge the soil. Use one of the techniques in the table below:

Temporary Stabilization	Permanent Stabilization
• Temporary grass seed covered with straw or other mulches and tackifiers • Hydroseeding • Rolled erosion control products with or without temporary grass seed • Appropriately applied straw or other mulch • Plastic sheeting	• Permanent grass seed covered with straw or other mulches and tackifiers • Geotextile fabrics such as permanent soil reinforcement matting • Hydroseeding • Shrubs or other permanent plantings covered with mulch • Uniform and evenly distributed ground cover sufficient to restrain erosion • Structural methods such as concrete, asphalt or retaining walls • Rolled erosion control products with grass seed

POLYACRYLAMIDES (PAMS) AND FLOCCULANTS

1. Select flocculants that are appropriate for the soils being exposed during construction, selecting from the *NC DWR List of Approved PAMS/Flocculants*.
2. Apply flocculants at or before the inlets to Erosion and Sediment Control Measures.
3. Apply flocculants at the concentrations specified in the *NC DWR List of Approved PAMS/Flocculants* and in accordance with the manufacturer's instructions.
4. Provide ponding area for containment of treated Stormwater before discharging offsite.
5. Store flocculants in leak-proof containers that are kept under storm-resistant cover or surrounded by secondary containment structures.

EQUIPMENT AND VEHICLE MAINTENANCE

1. Maintain vehicles and equipment to prevent discharge of fluids.
2. Provide drip pans under any stored equipment.
3. Identify leaks and repair as soon as feasible, or remove leaking equipment from the project.
4. Collect all spent fluids, store in separate containers and properly dispose as hazardous waste (recycle when possible).
5. Remove leaking vehicles and construction equipment from service until the problem has been corrected.
6. Bring used fuels, lubricants, coolants, hydraulic fluids and other petroleum products to a recycling or disposal center that handles these materials.

LITTER, BUILDING MATERIAL AND LAND CLEARING WASTE

1. Never bury or burn waste. Place litter and debris in approved waste containers.
2. Provide a sufficient number and size of waste containers (e.g dumpster, trash receptacle) on site to contain construction and domestic wastes.
3. Locate waste containers at least 50 feet away from storm drain inlets and surface waters unless no other alternatives are reasonably available.
4. Locate waste containers on areas that do not receive substantial amounts of runoff from upland areas and does not drain directly to a storm drain, stream or wetland.
5. Cover waste containers at the end of each workday and before storm events or provide secondary containment. Repair or replace damaged waste containers.
6. Anchor all lightweight items in waste containers during times of high winds.
7. Empty waste containers as needed to prevent overflow. Clean up immediately if containers overflow.
8. Dispose waste off-site at an approved disposal facility.
9. On business days, clean up and dispose of waste in designated waste containers.

PAINT AND OTHER LIQUID WASTE

1. Do not dump paint and other liquid waste into storm drains, streams or wetlands.
2. Locate paint washouts at least 50 feet away from storm drain inlets and surface waters unless no other alternatives are reasonably available.
3. Contain liquid wastes in a controlled area.
4. Containment must be labeled, sized and placed appropriately for the needs of site.
5. Prevent the discharge of soaps, solvents, detergents and other liquid wastes from construction sites.

PORTABLE TOILETS

1. Install portable toilets on level ground, at least 50 feet away from storm drains, streams or wetlands unless there is no alternative reasonably available. If 50 foot offset is not attainable, provide relocation of portable toilet behind silt fence or place on a gravel pad and surround with sand bags.
2. Provide staking or anchoring of portable toilets during periods of high winds or in high foot traffic areas.
3. Monitor portable toilets for leaking and properly dispose of any leaked material. Utilize a licensed sanitary waste hauler to remove leaking portable toilets and replace with properly operating unit.

EARTHEN STOCKPILE MANAGEMENT

1. Show stockpile locations on plans. Locate earthen-material stockpile areas at least 50 feet away from storm drain inlets, sediment basins, perimeter sediment controls and surface waters unless it can be shown no other alternatives are reasonably available.
2. Protect stockpile with silt fence installed along toe of slope with a minimum offset of five feet from the toe of stockpile.
3. Provide stable stone access point when feasible.
4. Stabilize stockpile within the timeframes provided on this sheet and in accordance with the approved plan and any additional requirements. Soil stabilization is defined as vegetative, physical or chemical coverage techniques that will restrain accelerated erosion on disturbed soils for temporary or permanent control needs.

ONSITE CONCRETE WASHOUT STRUCTURE WITH LINER

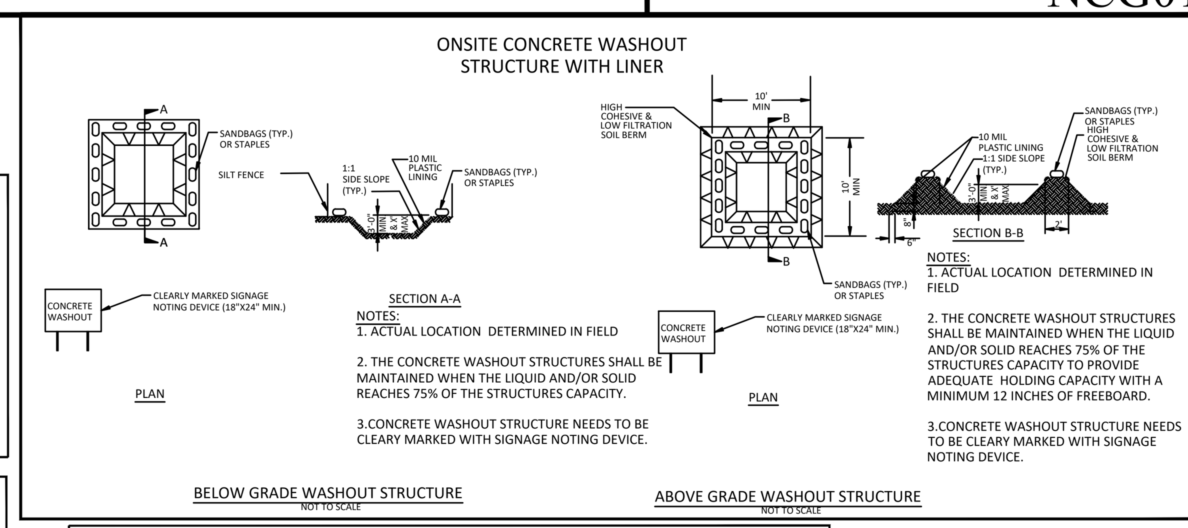

CONCRETE WASHOUTS

1. Do not discharge concrete or cement slurry from the site.
2. Dispose of, or recycle settled, hardened concrete residue in accordance with local and state solid waste regulations and at an approved facility.
3. Manage washout from mortar mixers in accordance with the above item and in addition place the mixer and associated materials on impervious barrier and within lot perimeter silt fence.
4. Install temporary concrete washouts per local requirements, where applicable. If an alternate method or product is to be used, contact your approval authority for review and approval. If local standard details are not available, use one of the two types of temporary concrete washouts provided on this detail.
5. Do not use concrete washouts for dewatering or storing defective curb or sidewalk sections. Stormwater accumulated within the washout may not be pumped into or discharged to the storm drain system or receiving surface waters. Liquid waste must be pumped out and removed from project.
6. Locate washouts at least 50 feet from storm drain inlets and surface waters unless it can be shown that no other alternatives are reasonably available. At a minimum, install protection of storm drain inlet(s) closest to the washout which could receive spills or overflow.
7. Locate washouts in an easily accessible area, on level ground and install a stone entrance pad in front of the washout. Additional controls may be required by the approving authority.
8. Install at least one sign directing concrete trucks to the washout within the project limits. Post signage on the washout itself to identify this location.
9. Remove leavings from the washout when at approximately 75% capacity to limit overflow events. Replace the tarp, sand bags or other temporary structural components when no longer functional. When utilizing alternative or proprietary products, follow manufacturer's instructions.
10. At the completion of the concrete work, remove remaining leavings and dispose of in an approved disposal facility. Fill pit, if applicable, and stabilize any disturbance caused by removal of washout.

HERBICIDES, PESTICIDES AND RODENTICIDES

1. Store and apply herbicides, pesticides and rodenticides in accordance with label restrictions.
2. Store herbicides, pesticides and rodenticides in their original containers with the label, which lists directions for use, ingredients and first aid steps in case of accidental poisoning.
3. Do not store herbicides, pesticides and rodenticides in areas where flooding is possible or where they may spill or leak into wells, stormwater drains, ground water or surface water. If a spill occurs, clean area immediately.
4. Do not stockpile these materials onsite.

HAZARDOUS AND TOXIC WASTE

1. Create designated hazardous waste collection areas on-site.
2. Place hazardous waste containers under cover or in secondary containment.
3. Do not store hazardous chemicals, drums or bagged materials directly on the ground.

NCG01 GROUND STABILIZATION AND MATERIALS HANDLING

EFFECTIVE: 04/01/19

PROJECT REFERENCE NO.	SHEET NO.
X-XXXX	EC-2G
R/W SHEET NO.	
ROADWAY DESIGN ENGINEER	HYDRAULICS ENGINEER

WATTLE DETAIL

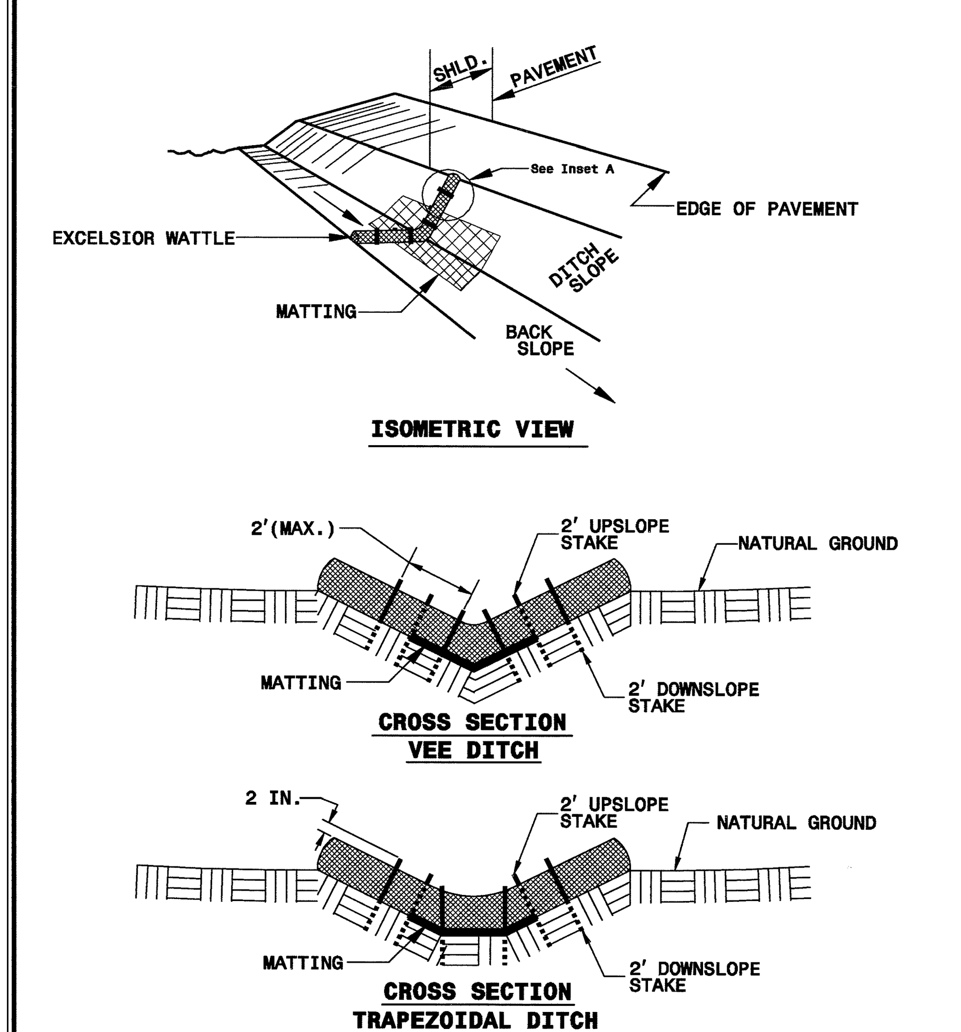

NOTES:

USE MINIMUM 12 IN. DIAMETER EXCELSIOR WATTLE.

USE 2 FT. WOODEN STAKES WITH A 2 IN. BY 2 IN. NOMINAL CROSS SECTION.

ONLY INSTALL WATTLE(S) TO A HEIGHT IN DITCH SO FLOW WILL NOT WASH AROUND WATTLE AND SCOUR DITCH SLOPES AND AS DIRECTED.

INSTALL A MINIMUM OF 2 UPSLOPE STAKES AND 4 DOWNSLOPE STAKES AT AN ANGLE TO WEDGE WATTLE TO BOTTOM OF DITCH.

PROVIDE STAPLES MADE OF 0.125 IN. DIAMETER STEEL WIRE FORMED INTO A U SHAPE NOT LESS THAN 12" IN LENGTH.

INSTALL STAPLES APPROXIMATELY EVERY 1 LINEAR FOOT ON BOTH SIDES OF WATTLE AND AT EACH END TO SECURE IT TO THE SOIL.

INSTALL MATTING IN ACCORDANCE WITH SECTION 1631 OF THE STANDARD SPECIFICATIONS.

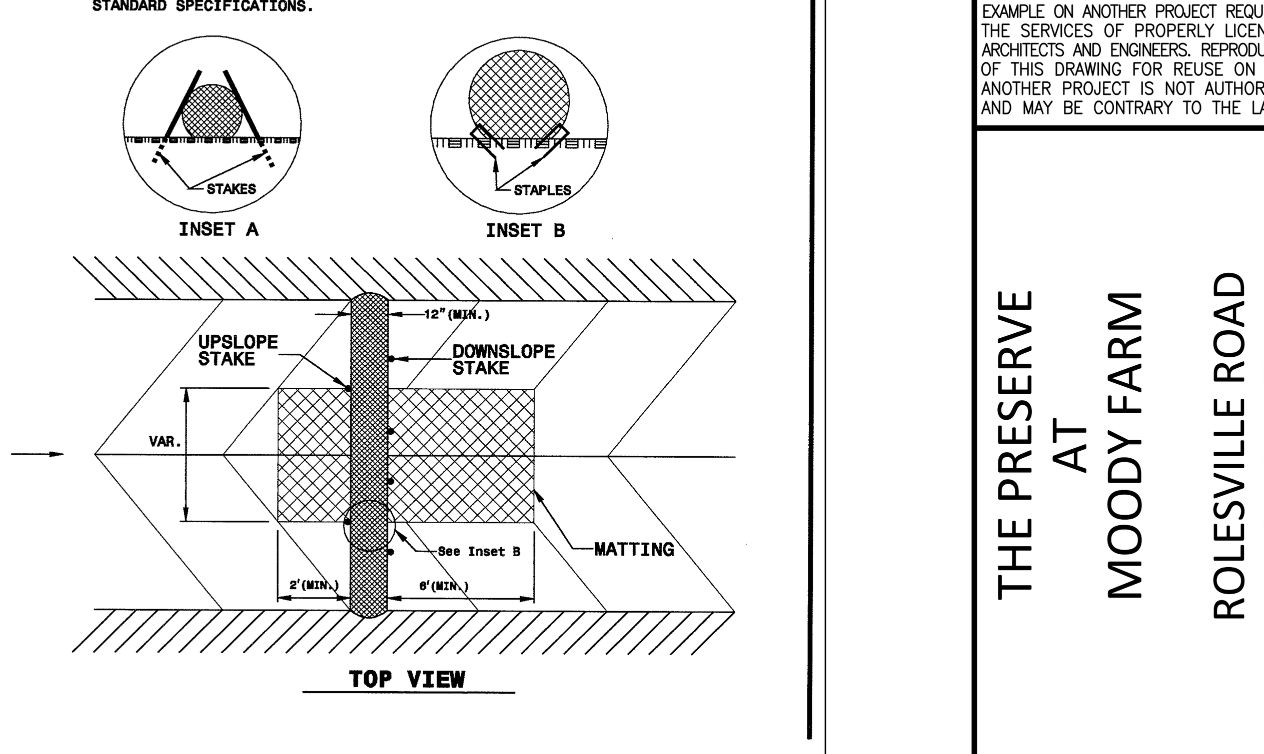

CITY OF RALEIGH - PLANS AUTHORIZED FOR CONSTRUCTION

Electronic Approval: This approval is being issued electronically. This approval is valid only upon the signature of a City of Raleigh Review Officer below. The City will retain a copy of the approved plans. Any work authorized by this approval must proceed in accordance with the plans kept on file with the City. This electronic approval may not be edited once issued. Any modification to this approval once issued will invalidate this approval.

City of Raleigh Development Approval ______________________

Raleigh Water Review Officer

North Carolina 811
www.nc811.org
*** 3 Days Before Digging ***
North Carolina 811
811 or 1-800-632-4949
Remote Ticket Entry
http://nc811.org/remoteticketentry.htm

AMERICAN Engineering
American Engineering Associates - Southeast, P.A.
4020 Westchase Boulevard, Suite 450
Raleigh, NC 27607
919-469-1101

NORTH CAROLINA AMERICAN ENGINEERING ASSOCIATES SOUTHEAST C-3881 CERTIFICATE OF AUTHORIZATION

PRELIMINARY - DO NOT USE FOR CONSTRUCTION
NORTH CAROLINA SEAL 56528 ENGINEER JAKOB P. KLEIN
Digitally signed by Jakob Klein
Date: 2024.12.02 16:11:07 -05'00'

NO.	DATE	REVISION:

STIPULATION FOR REUSE

THIS DRAWING WAS PREPARED FOR USE ON THE SPECIFIC SITE, NAMED HEREON, CONTEMPORANEOUSLY WITH ITS ISSUE DATE AS LISTED, HEREON. AND IT IS NOT SUITABLE FOR USE ON A DIFFERENT PROJECT SITE OR AT A LATER TIME. USE OF THIS DRAWING FOR REFERENCE OR EXAMPLE ON ANOTHER PROJECT REQUIRES THE SERVICES OF PROPERLY LICENSED ARCHITECTS AND ENGINEERS. REPRODUCTION OF THIS DRAWING FOR REUSE ON ANOTHER PROJECT IS NOT AUTHORIZED AND MAY BE CONTRARY TO THE LAW.

THE PRESERVE AT MOODY FARM
ROLESVILLE ROAD
WAKE COUNTY, NC

JOB NUMBER: 21-002
CHECKED BY: JK
DRAWN BY: RC & SM
DATE: 12/02/2024

SHEET TITLE:
EROSION CONTROL DETAILS

SHEET NO.:
CD5

Z:\Jobs\21-002 Moody Development Tract (R210002)\dwg_Working Dwgs\Construction Set\CD1 Project Details.dwg December 2, 2024

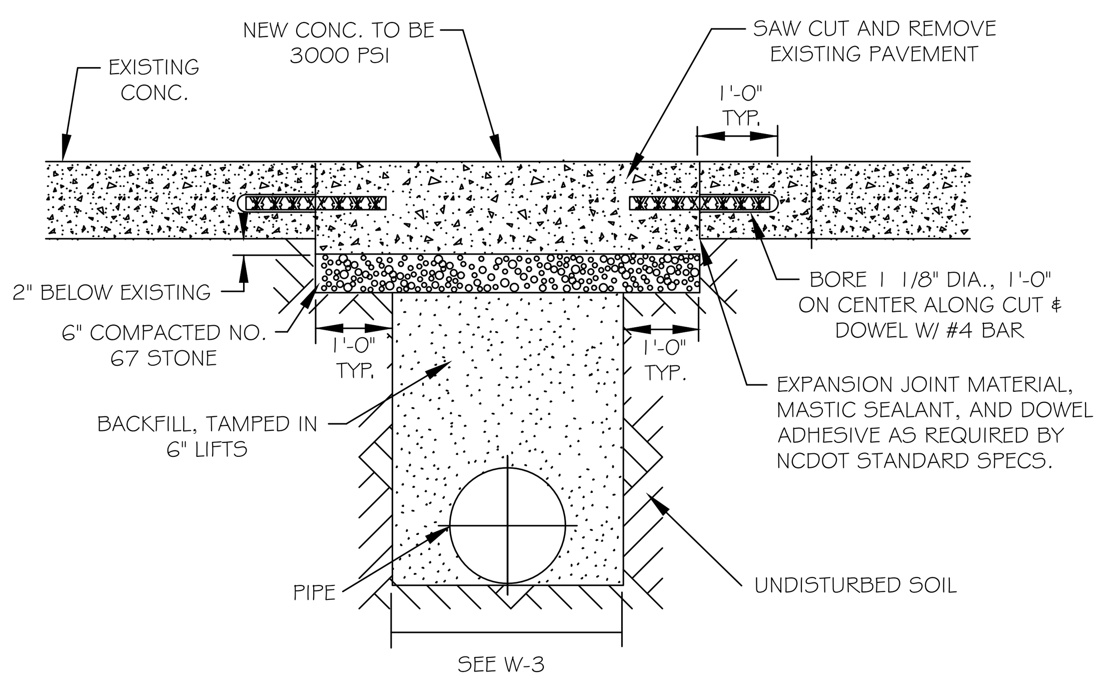

NOTES:
1. SEE CITY OF RALEIGH STANDARDS FOR TRENCHES AND PIPE BEDDING W-3 FOR ADDITIONAL DETAILS
2. PAVEMENT CUTS WITHIN NCDOT ROW SHALL CONFORM TO THE APPROVED ON SITE ENCROACHMENT PERMIT.
3. THE PAVEMENT CUT SHALL BE DEFINED BY A STRAIGHT EDGE AND CUT WITH AN APPROVED SAW CUT MACHINE.
4. THE TRENCH SUBGRADE MATERIAL SHALL BE BACKFILLED WITH SUITABLE MATERIAL AND COMPACTED TO A DENSITY OF AT LEAST 95% OF THAT OBTAINED BY COMPACTING A SAMPLE OF THE MATERIAL IN ACCORDANCE WITH AASHTO T-99 AS MODIFIED BY NCDOT. 5. THE FINAL 6" OF FILL SHALL CONSIST OF ABC MATERAIL COMPACTED TO A DENSITY EQUAL TO 100% OF THAT OBTAINED BY COMPACTING A SAMPLE OF THE MATERIAL IN ACCORDANCE WITH AASHTO T-80 AS MODIFIED BY NCDOT .

CITY OF RALEIGH
DEPARTMENT OF PUBLIC UTILITIES
STANDARD CONCRETE PAVEMENT PATCH DETAIL

DWG. NO.	REVISIONS	DATE	REVISIONS	DATE
W-1	RRH	3-31-00	A.B.B.	10-29-10
	A.B.B.	2-8-05	MAB	10-31-13

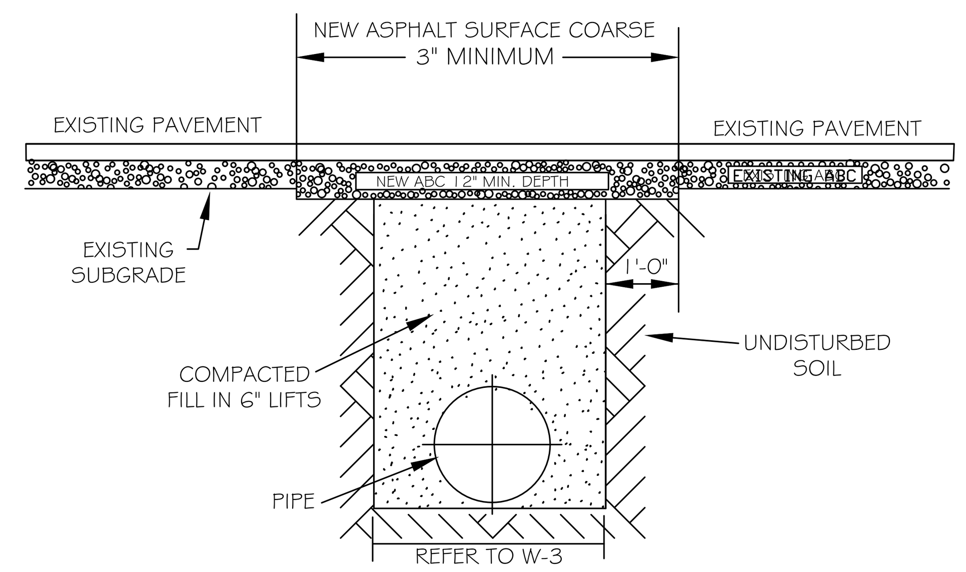

NOTES:

1. THE PAVEMENT CUT SHALL BE DEFINED BY A STRAIGHT EDGE AND CUT WITH AN APPROPRIATE SAW CUT MACHINE.
2. THE TRENCH SUBGRADE MATERIAL SHALL BE BACKFILLED WITH SUITABLE MATERIAL AND COMPACTED TO A DENSITY OF AT LEAST 95% OF THAT OBTAINED BY COMPACTING A SAMPLE OF THE MATERIAL IN ACCORDANCE WITH AASHTO T-99 AS MODIFIED BY NCDOT.
3. THE FINAL 1' OF FILL SHALL CONSIST OF ABC MATERIAL COMPACTED TO A DENSITY EQUAL TO 100% OF THAT OBTAINED BY COMPACTING A SAMPLE OF THE MATERIAL IN ACCORDANCE WITH AASHTO T-80 AS MODIFIED BY NCDOT.
4. THE ENTIRE THICKNESS/ VERTICAL EDGE OF CUT SHALL BE TACKED.
5. THE SAME DEPTH OF PAVEMENT MATERIAL WHICH EXISTS SHALL BE REINSTALLED, BUT IN NO CASE SHALL THE ASPHALT BE LESS THAN 3" THICK.
6. THE ASPHALT PAVEMENT MATERIAL SHALL BE INSTALLED AND COMPACTED THOROUGHLY WITH A SMOOTH DRUM ROLLER TO ACHIEVE A SMOOTH LEVEL PATCH.
7. REFER TO CITY OF RALEIGH STANDARDS FOR TRENCHES AND PIPE BEDDING, W-3. FOR ADDITIONAL DETAILS.
8. NO HAND PATCHING ALLOWED.
9. PAVEMENT CUTS WITHIN NCDOT ROW SHALL CONFORM TO THE APPROVED ON SITE ENCROACHMENT PERMIT.

CITY OF RALEIGH
DEPARTMENT OF PUBLIC UTILITIES
STANDARD ASPHALT PAVEMENT PATCH DETAIL

DWG. NO.	REVISIONS	DATE	REVISIONS	DATE
W-2	RRH	3-31-00	A.B.B.	4-16-04
	D.W.C.	11-1-99	J.P.S.	10-29-10

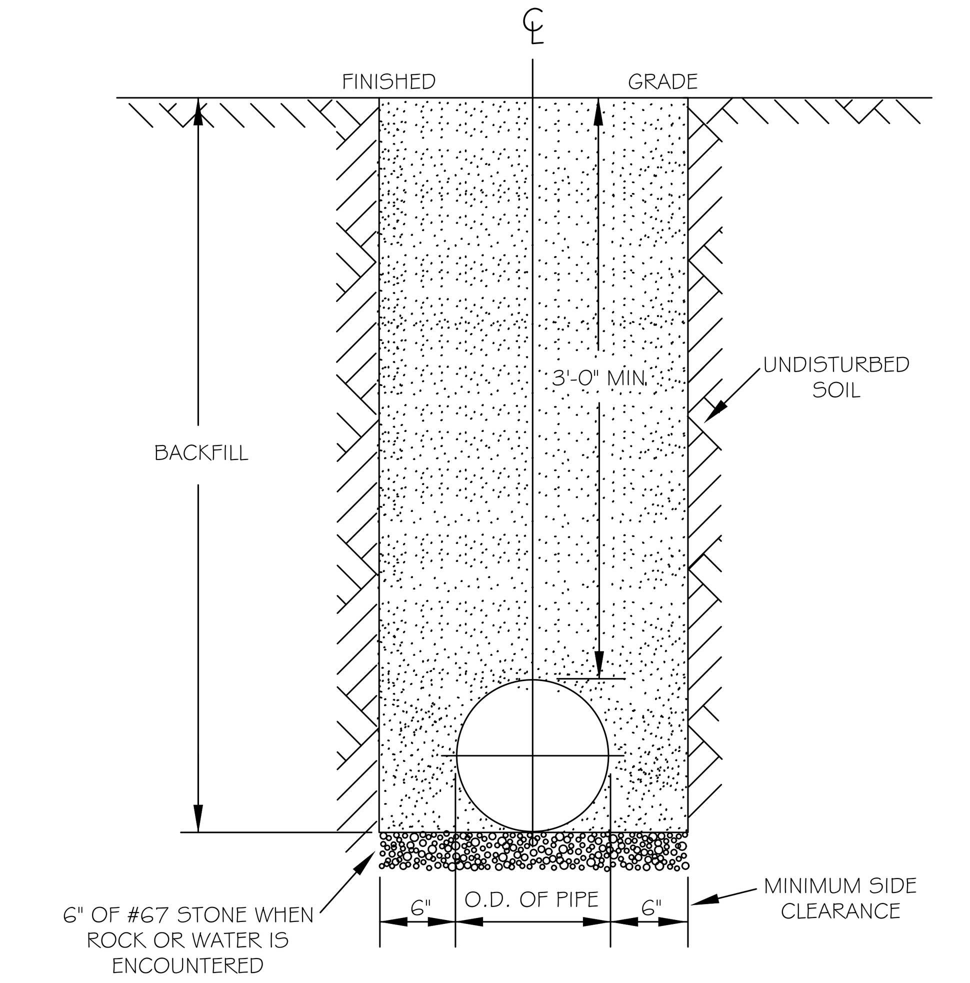

NOTES:
1. TRENCHES REQUIRING SHORING AND BRACING, DIMENSIONS SHALL BE TAKEN FROM THE INSIDE FACE OF THE SHORING AND BRACING.
2. NO ROCKS OR BOULDERS 4" OR LARGER TO BE USED IN BACKFILL.
3. ALL BACKFILL MATERIAL SHALL BE SUITABLE NATIVE MATERIAL.
4. BACKFILL SHALL BE TAMPED IN 6" LIFTS.
5. ACHIEVE 95% COMPACTION IN BACKFILL.

CITY OF RALEIGH
DEPARTMENT OF PUBLIC UTILITIES
TRENCH BOTTOM DIMENSIONS & BACKFILLING REQUIREMENTS FOR DUCTILE IRON

DWG. NO.	REVISIONS	DATE	REVISIONS	DATE
W-3	D.W.C.	9-3-99	ABB	2-15-05
	RRH	3-31-00	J.P.S.	10-29-10

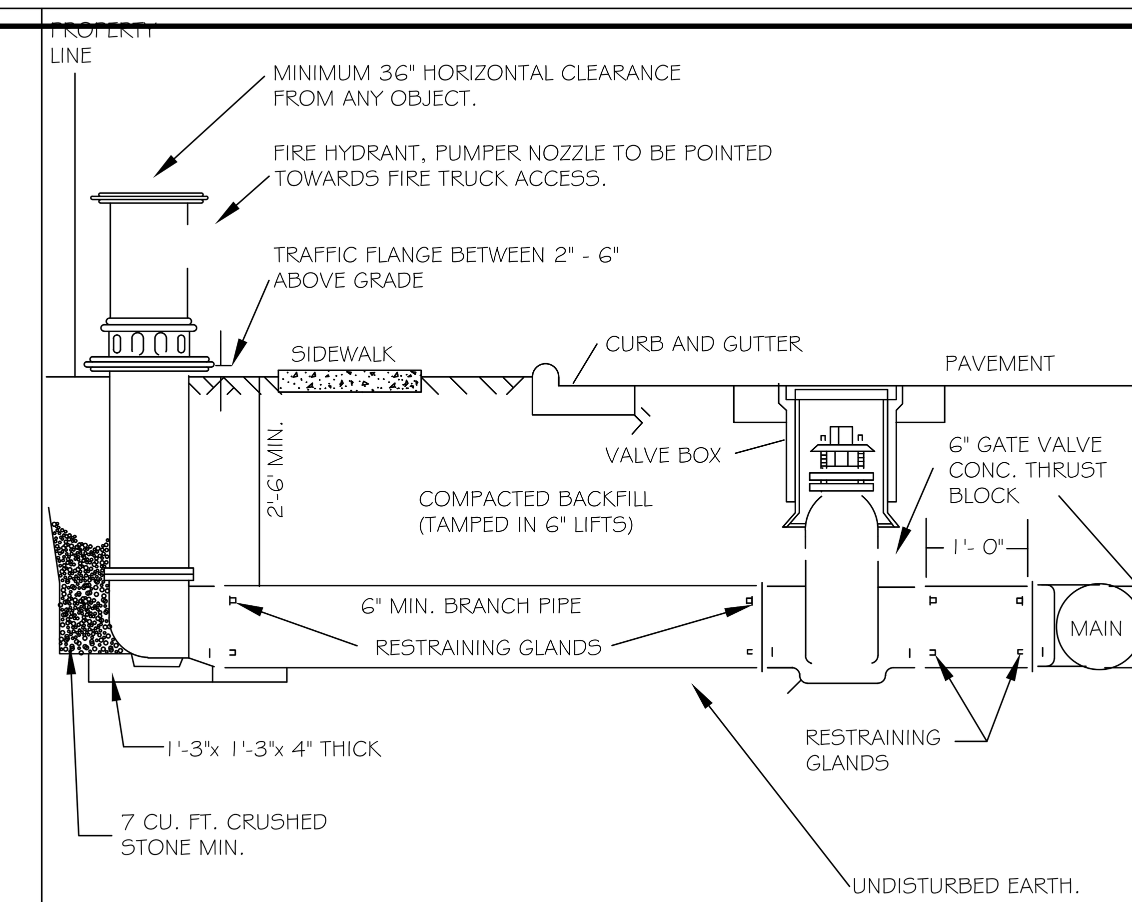

NOTES:
1. FIRE HYDRANT SHALL BE AS MANUFACTURED: MUELLER, AMERICAN DARLING, KENNEDY, M&H, WATEROUS, CLOW, EAST JORDAN IRON WORKS, OR US PIPE.
2. BRANCH PIPE SHALL BE DUCTILE IRON AWWA C150-96
3. 6" GATE VALVE SHALL BE AWWA C500-86 OPEN LEFT
4. STEEL RODS AND BOLTS SHALL BE $\frac{3}{4}$" HOT DIPPED GALVANIZED
5. FIRE HYDRANTS WILL BE INSTALLED IN TRUE VERTICAL POSITION
RODS SHALL NOT BE COUPLED MORE THAN ONCE. IF THE LENGTH FROM THE VALVE TO THE HYDRANT EXCEEDS 20' THEN A MECHANICAL RESTRAINING GLAND WITH A REBAR CAGE SHALL BE INSTALLED NO MORE THAN 10' FROM HYDRANT AND POURED IN CONCRETE.
FIRE HYDRANTS TO BE LOCATED IN ROW OR 2 FOOT EASEMENT ADJACENT TO ROW

ANYTIME SITE WORK, CONSTRUCTION, ROAD WORK, OR ANY OTHER WORK CHANGES THE GRADE OF THE FIRE HYDRANT, THE PERSON RESPONSIBLE FOR THE WORK IS RESPONSIBLE FOR ADJUSTING THE FIRE HYDRANT TO STAY WITHIN COMPLIANCE.

CITY OF RALEIGH
DEPARTMENT OF PUBLIC UTILITIES
STANDARD FIRE HYDRANT INSTALLATION DETAIL

DWG. NO.	REVISIONS	DATE	REVISIONS	DATE
W-4	ABB	4-6-04	PAP	2/17/09
	DHL	2/14/08		

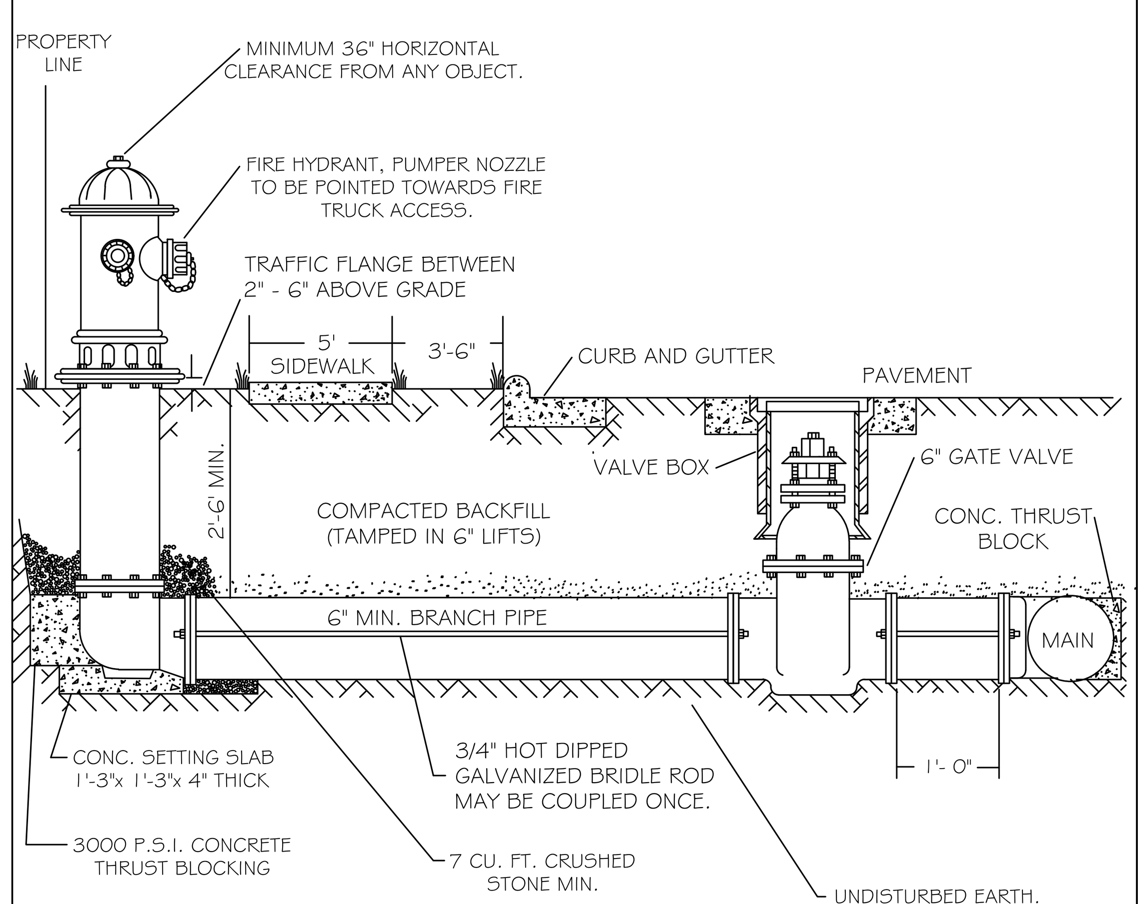

NOTES:
1. FIRE HYDRANT SHALL BE AS MANUFACTURED: MUELLER, AMERICAN DARLING, KENNEDY, M&H, WATEROUS, CLOW, EAST JORDAN IRON WORKS, OR US PIPE.
2. BRANCH PIPE SHALL BE DUCTILE IRON AWWA C150-96
3. 6" GATE VALVE SHALL BE AWWA C500-86 OPEN LEFT
4. STEEL RODS AND BOLTS SHALL BE $\frac{3}{4}$" HOT DIPPED GALVANIZED
5. FIRE HYDRANTS WILL BE INSTALLED IN TRUE VERTICAL POSITION
RODS SHALL NOT BE COUPLED MORE THAN ONCE. IF THE LENGTH FROM THE VALVE TO THE HYDRANT EXCEEDS 20' THEN A MECHANICAL RESTRAINING GLAND WITH A REBAR CAGE SHALL BE INSTALLED NO MORE THAN 10' FROM HYDRANT AND POURED IN CONCRETE.
FIRE HYDRANTS TO BE LOCATED IN ROW OR 2 FOOT EASEMENT ADJACENT TO ROW

ANYTIME SITE WORK, CONSTRUCTION, ROAD WORK, OR ANY OTHER WORK CHANGES THE GRADE OF THE FIRE HYDRANT, THE PERSON RESPONSIBLE FOR THE WORK IS RESPONSIBLE FOR ADJUSTING THE FIRE HYDRANT TO STAY WITHIN COMPLIANCE.

CITY OF RALEIGH
DEPARTMENT OF PUBLIC UTILITIES
STANDARD FIRE HYDRANT INSTALLATION DETAIL

DWG. NO.	REVISIONS	DATE	REVISIONS	DATE
W-4a	ABB	4-6-04		

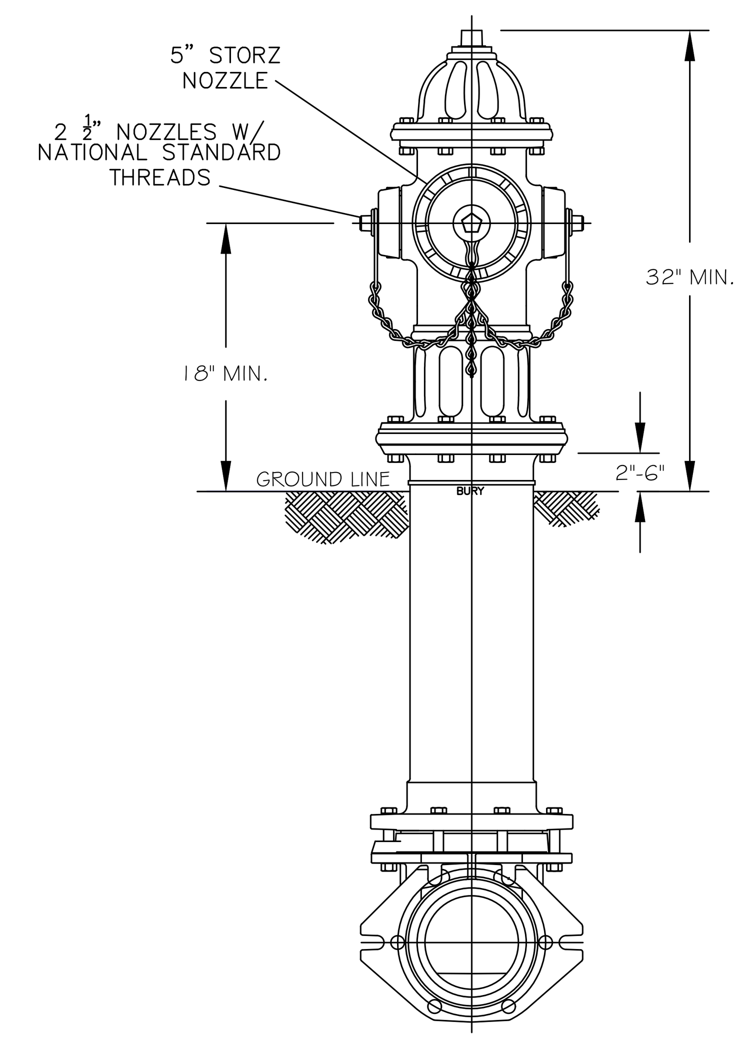

NOTES:
1. ALL PUBLIC FIRE HYDRANTS IN THE CITY OF RALEIGH AND THE MERGER TOWNS OF GARNER, ROLESVILLE, WAKE FOREST, KNIGHTDALE, WENDELL AND ZEBULON SHALL BE PAINTED CHROME YELLOW WITH HIGH REFLECTIVE ALUMINUM SILVER CAPS, BONNETS AND OPERATING NUTS.
2. ALL PRIVATE FIRE HYDRANTS SHALL BE RED.

CITY OF RALEIGH
DEPARTMENT OF PUBLIC UTILITIES
RALEIGH, GARNER, KNIGHTDALE, ROLESVILLE, WAKE FOREST, WENDELL & ZEBULON
STANDARD FIRE HYDRANT WITH 5" STORZ PUMPER NOZZLE

DWG. NO.	REVISIONS	DATE	REVISIONS	DATE
W-5	MAB	6-30-16		
	KAT	9-15-17		

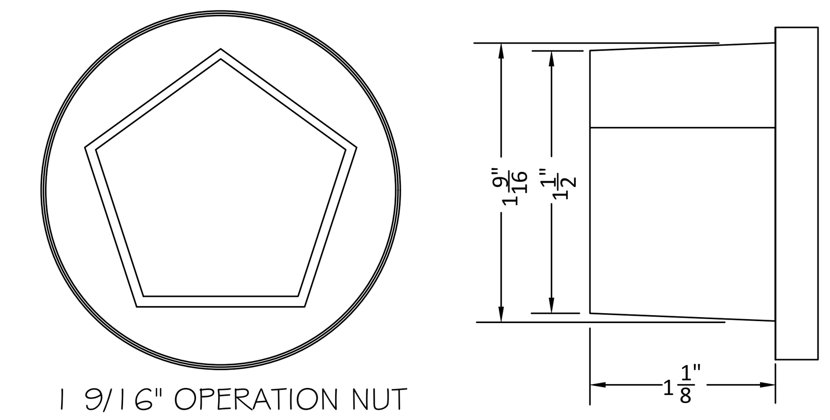

1 9/16" OPERATION NUT

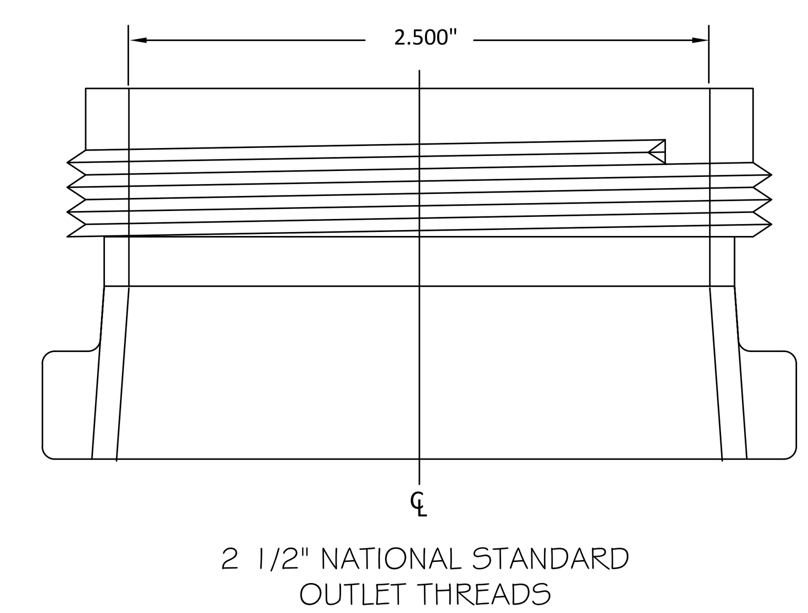

2 1/2" NATIONAL STANDARD OUTLET THREADS

CITY OF RALEIGH
DEPARTMENT OF PUBLIC UTILITIES
HYDRANT OPERATING NUT AND 2 1/2" OUTLET THREADS

DWG. NO.	REVISIONS	DATE	REVISIONS	DATE
W-6		3-31-00		
	RRH		DHL	2-18-08
	A.B.B	4-13-04	J.P.S	11-1-10

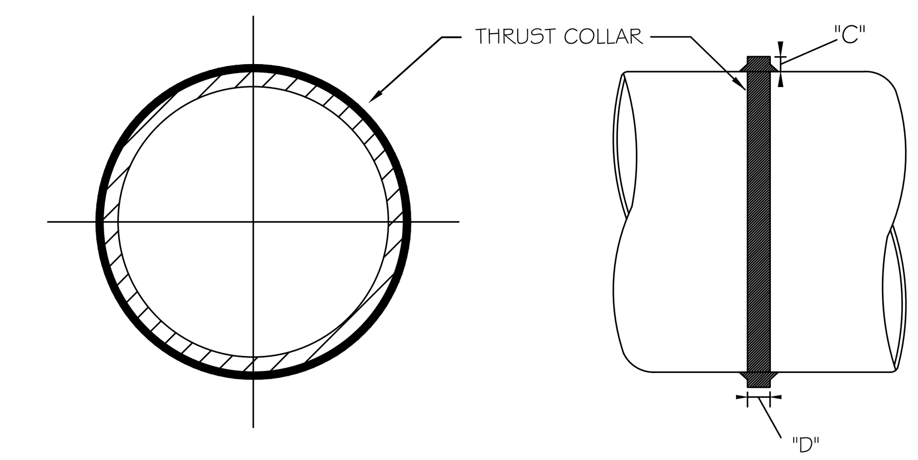

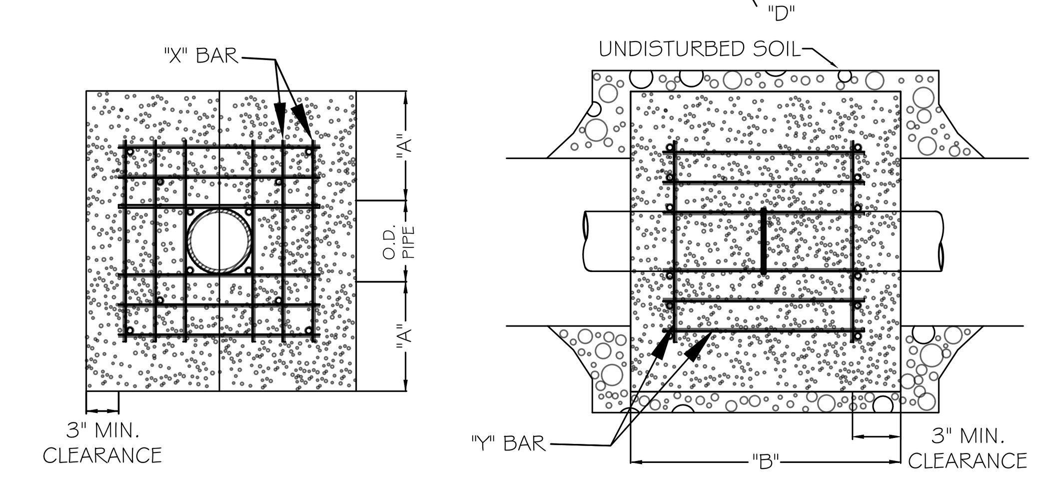

REINFORCING REQUIREMENTS

I.D. PIPE	REBAR SIZE	"X" BAR LENGTH	"X" BAR WEIGHT	"Y" BAR LENGTH	"Y" BAR WEIGHT	NO. REQUIRED
6" - 36"	#5	2'-2"+ O.D. PIPE	1.043 LBS/FT	1'-1"	1.1 LBS. EACH	X-24, Y-12
48" & greater	#6	3'-0"+ O.D. PIPE	1.502 LBS/FT	1'-3"	1.9 LBS. EACH	X-24, Y-12

THRUST COLLAR, AND THRUST SCHEDULE

I.D. PIPE	"A"	"B"	"C"	"D"
6" - 16"	1'-4"	1'-7"	2"	3/8"
20" - 24"	1'-4"	1'-7"	3"	1/2"
30" - 36"	1'-4"	1'-7"	4"	5/8"
48" & greater	1'-8"	1'-9"	6"	7/8"

NOTES:
1. SEE STANDARD DETAIL W-9 FOR THRUST BLOCK LOCATIONS.
2. CONCRETE SHALL BE 3000 PSI AND TRANSIT MIXED.
3. REINFORCING BARS SHALL BE DEFORMED AND TIED TOGETHER.
4. TRENCH BOTTOM WIDTH IN VICINITY OF THRUST BLOCK INSTALLATION SHALL BE THE MINIMUM WIDTH AS SHOWN ON STANDARD DETAIL W-3.
5. BACKFILL TAMPED IN 6" LIFTS PER STANDARD DETAIL W-3.
6. THRUST COLLAR MUST BE FACTORY WELDED ON BOTH SIDES ALONG BOTH EDGES OF COLLAR AROUND CIRCUMFERENCE.

CITY OF RALEIGH
DEPARTMENT OF PUBLIC UTILITIES
THRUST BLOCKING DESIGN DATA FOR WATER MAINS

DWG. NO.	REVISIONS	DATE	REVISIONS	DATE
W-7	RRH	1-21-00	J.P.S. 11-1-10	
	D.H.L.	6-18-08		

CITY OF RALEIGH - PLANS AUTHORIZED FOR CONSTRUCTION

Electronic Approval: This approval is being issued electronically. This approval is valid only upon the signature of a City of Raleigh Review Officer below. The City will retain a copy of the approved plans. Any work authorized by this approval must proceed in accordance with the plans kept on file with the City. This electronic approval may not be edited once issued. Any modification to this approval once issued will invalidate this approval.

City of Raleigh Development Approval ______________________

Raleigh Water Review Officer

North Carolina 811
www.nc811.org
*** 3 Days Before Digging ***
North Carolina 811
811 or 1-800-632-4949
Remote Ticket Entry
http://nc811.org/remoteticketentry.htm

AMERICAN Engineering
American Engineering Associates - Southeast, P.A.
4020 Westchase Boulevard, Suite 450
Raleigh, NC 27607
919-469-1101

NORTH CAROLINA AMERICAN ENGINEERING ASSOCIATES SOUTHEAST C-3881 CERTIFICATE OF AUTHORIZATION

PRELIMINARY - DO NOT USE FOR CONSTRUCTION
NORTH CAROLINA PROFESSIONAL SEAL 56528 ENGINEER JAKOB P. KLEIN
Digitally signed by Jakob Klein Date: 2024.12.02 16:11:08 -05'00'

NO.	DATE	REVISION:

STIPULATION FOR REUSE

THIS DRAWING WAS PREPARED FOR USE ON THE SPECIFIC SITE, NAMED HEREON, CONTEMPORANEOUSLY WITH ITS ISSUE DATE AS LISTED, HEREON. AND IT IS NOT SUITABLE FOR USE ON A DIFFERENT PROJECT SITE OR AT A LATER TIME. USE OF THIS DRAWING FOR REFERENCE OR EXAMPLE ON ANOTHER PROJECT REQUIRES THE SERVICES OF PROPERLY LICENSED ARCHITECTS AND ENGINEERS. REPRODUCTION OF THIS DRAWING FOR REUSE ON ANOTHER PROJECT IS NOT AUTHORIZED AND MAY BE CONTRARY TO THE LAW.

THE PRESERVE AT MOODY FARM
ROLESVILLE ROAD
WAKE COUNTY, NC

JOB NUMBER: 21-002
CHECKED BY: JK
DRAWN BY: RC & SM
DATE: 12/02/2024

SHEET TITLE:
UTILITY DETAILS

SHEET NO.:
CD6

Z:\Jobs\21-002 Moody Development Tract (R210002)\dwg_Working Dwgs\Construction Set\CD1 Project Details.dwg
December 2, 2024

THRUST BLOCKING

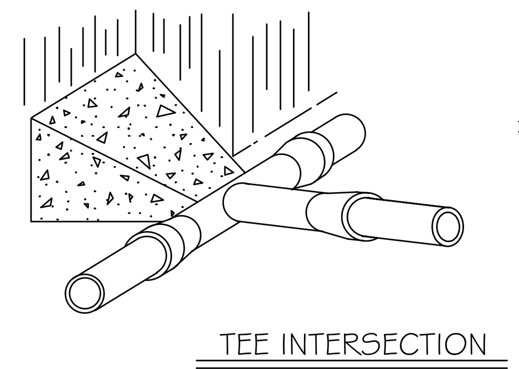

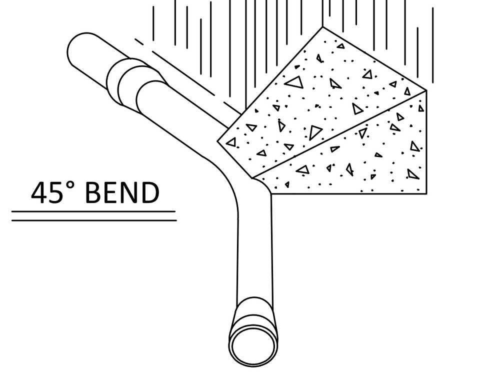

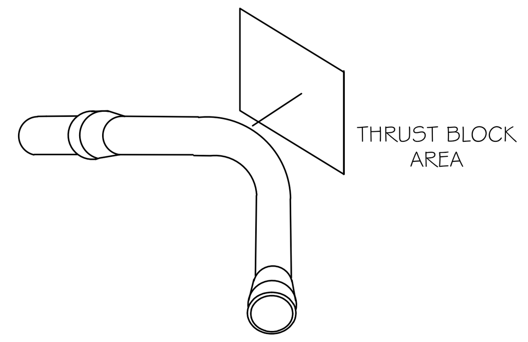

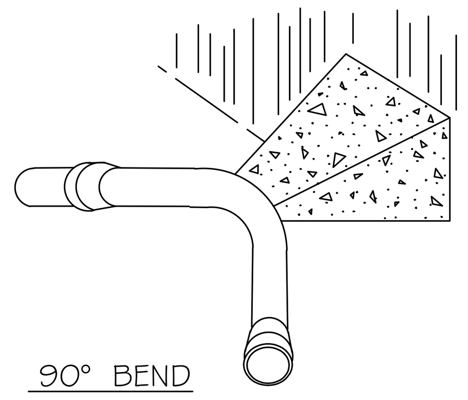

NOTES:

1. CONCRETE SHALL BE 3000 PSI
2. CONCRETE SHALL NOT CONTACT BOLTS OR ENDS OF MECHANICAL JOINT FITTINGS.
3. TRENCHES SHALL CONFORM TO STANDARD DETAIL W-3.
4. SEE STANDARD THRUST BLOCK TABLES, W-10 THRU W-11, FOR AREA OF CONCRETE REQUIRED.
5. ALL BENDS AND INTERSECTIONS SHALL HAVE CONCRETE THRUST BLOCKING.

CITY OF RALEIGH
DEPARTMENT OF PUBLIC UTILITIES
STANDARD THRUST BLOCKING VIEWS

DWG. NO.	REVISIONS	DATE	REVISIONS	DATE
W-9	D.W.C.	3-1-87	RRH	3-31-00
		9-7-99	D.H.L.	6-18-08

REACTION BEARING AREAS FOR HORIZONTAL WATER PIPE BENDS

BASED ON TEST PRESSURE OF 200 P.S.I.

ALL AREAS GIVEN IN SQUARE FEET.

SIZE AND DEGREE OF BEND	STATIC THRUST IN POUNDS	MODERATELY DRY CLAY 4000 LBS/FT²	SOFT CLAY 2000 LBS/FT²	1600 LBS/FT² GRAVEL / COARSE SAND	8000 LBS/FT² DRY CLAY - ALWAYS DRY	SAND, COMPACT FIRM 8000 LBS/FT²	SAND -CLEAN DRY 4000 LBS/FT²	SOIL 1000 LBS/FT² QUICKSAND - VERY POOR	ROCK - POOR 10,000 LBS/FT²
6"									
11 1/4°	1,108	1	1	1	1	1	1	2	1
22 1/2°	2,207	1	2	2	1	1	1	3	1
45°	4,328	2	3	3	1	1	2	5	1
90°	7,996	2	4	5	1	1	2	8	1
PLUG	5,655	2	3	4	1	1	2	6	1
8"									
11 1/4°	1,970	1	1	2	1	1	1	2	1
22 1/2°	3,922	1	2	3	1	1	1	4	1
45°	7,694	2	4	5	1	1	2	8	1
90°	14,215	4	8	9	2	2	4	15	2
PLUG	10,053	3	5	6	2	2	3	10	1
12"									
11 1/4°	4,433	2	3	3	1	1	2	5	1
22 1/2°	8,826	3	5	6	2	2	3	9	1
45°	17,312	5	9	11	3	3	5	18	2
90°	31,983	8	16	19	4	4	8	32	4
PLUG	22,619	6	12	14	3	3	6	23	3
16"									
11 1/4°	7,881	2	4	5	1	1	2	8	1
22 1/2°	15,691	4	8	10	2	2	4	16	2
45°	30,779	8	16	19	4	4	8	31	4
90°	56,861	15	29	35	8	8	15	57	6
PLUG	40,213	10	21	25	5	5	10	41	5

REACTION BEARING AREAS ARE IN SQUARE FEET MEASURED IN A VERTICAL PLANE IN THE TRENCH SIDE AT AN ANGLE OF 90° TO THE THRUST VECTOR.

USE 6" - 90 BEND VALUE FOR HYDRANTS FOR ADDITIONAL SAFETY FACTOR.

CITY OF RALEIGH
DEPARTMENT OF PUBLIC UTILITIES
THRUST BLOCKING DESIGN QUANTITY TABLE

DWG. NO.	REVISIONS	DATE	REVISIONS	DATE
W-10	D.W.C.	6-23-99		

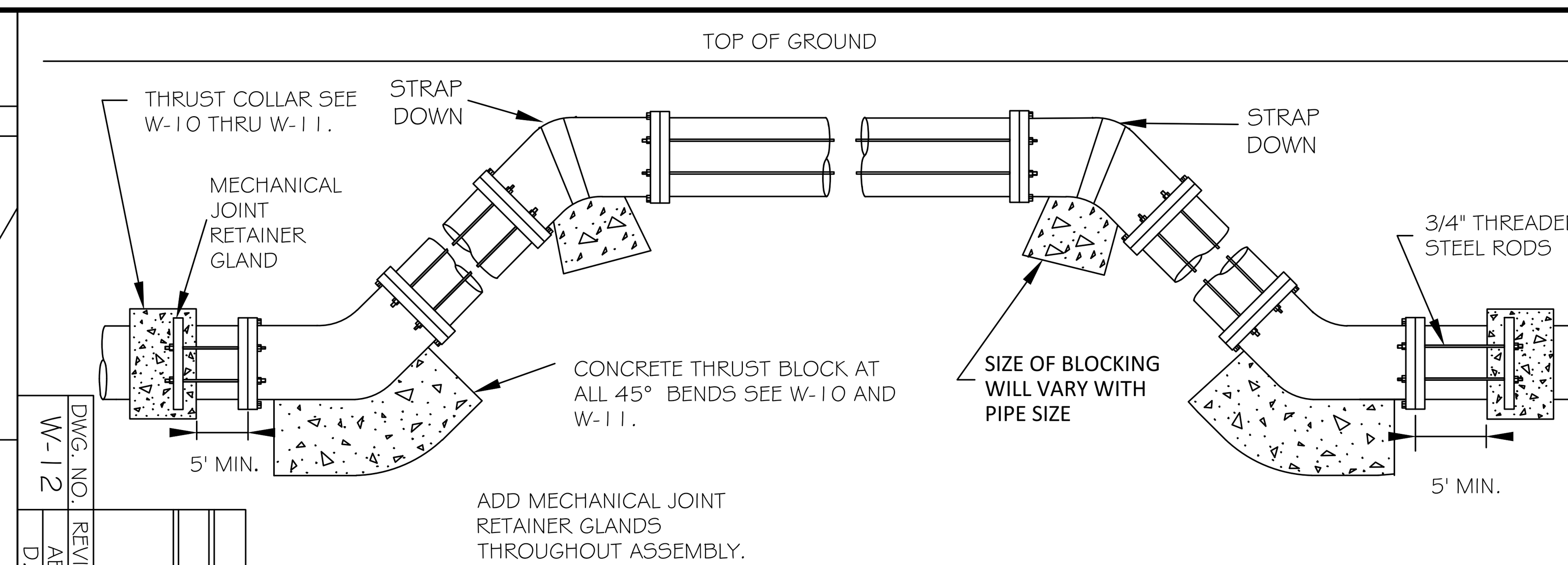

ADD MECHANICAL JOINT RETAINER GLANDS THROUGHOUT ASSEMBLY.

ROD REQUIREMENTS

SIZE OF 45 BEND	STATIC THRUST IN POUNDS	NO. OF RODS REQUIRED
6"	4,328	2
8"	7,694	4
12"	17,312	4
16"	30,779	8
24"	69,252	8

GENERAL NOTES:

1. STEEL RODS AND BOLTS SHALL BE 3/4" HOT DIPPED GALVANIZED.
2. CONCRETE SHALL NOT CONTACT BOLTS OR ENDS OF MECHANICAL JOINT BENDS.
3. RESTRAINED MECHANICAL GLANDS TO BE USED AT ALL FITTINGS.
4. MUST USE DUCTILE IRON EYE BOLTS WHERE NECESSARY.
5. 3' MINIMUM COVER MUST BE MAINTAINED ON ALL WATER MAINS

CITY OF RALEIGH
DEPARTMENT OF PUBLIC UTILITIES
STANDARD VERTICAL BEND

DWG. NO.	REVISIONS	DATE	REVISIONS	DATE
W-12	ABB	4-6-04	J.P.S.	11-1-10
	D.H.L.	6-18-08		

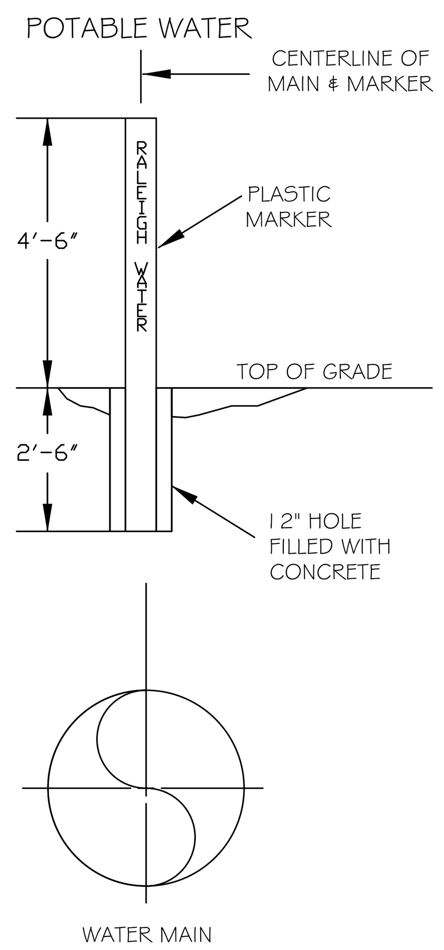

NOTES
1. POTABLE WATER MARKER TO BE BLUE IN COLOR.
2. POTABLE WATER MARKER TO BE LABELED "RALEIGH WATER".
3. TO BE SPACED ALONG CENTERLINE OF MAIN EVERY 300 FEET.
4. MARKERS TO BE ROUND AND 4" IN DIAMETER.

CITY OF RALEIGH
DEPARTMENT OF PUBLIC UTILITIES
STANDARD MAIN & VALVE MARKERS FOR POTABLE & REUSE WATER IN EASEMENTS

DWG. NO.	REVISIONS	DATE	REVISIONS	DATE
W-13	D.W.C.	9-7-99	DHL	8-16-07
	RRH	3-31-00	J.P.S.	11-1-10

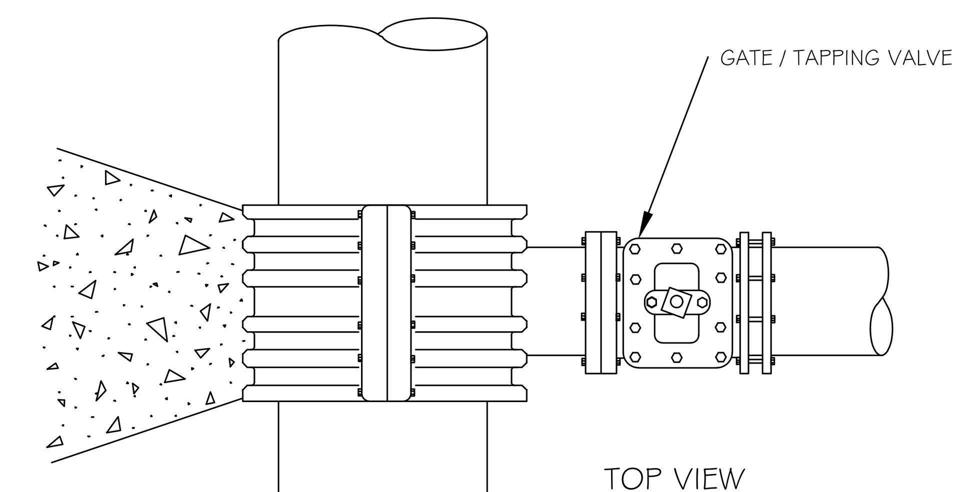

3000 PSI SOLID CONCRETE SHALL BE USED AS FOOTING FOR DUCTILE IRON PIPE.

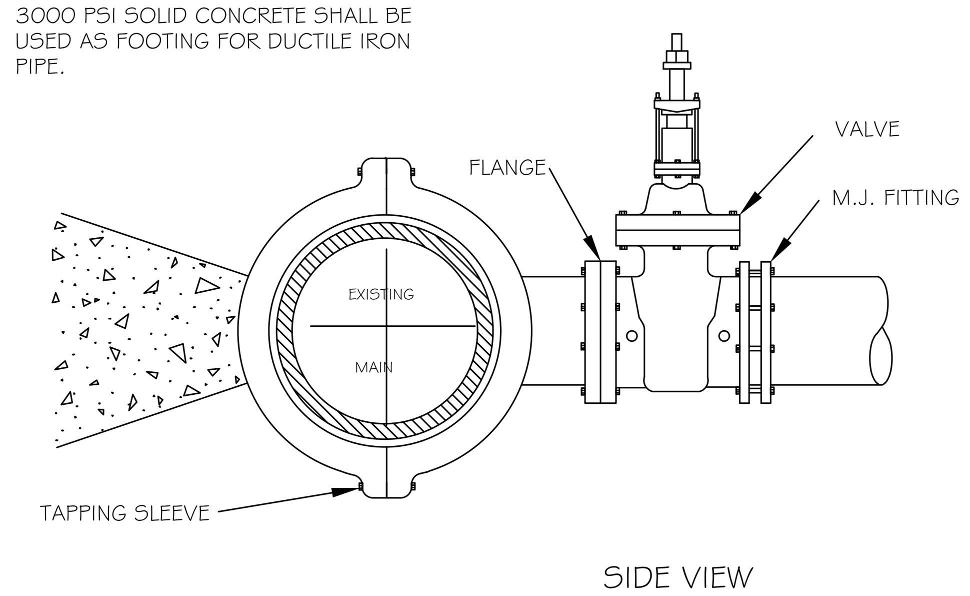

NOTES:
1. CONCRETE SHALL NOT CONTACT BOLTS OR ENDS OF MECHANICAL JOINT FITTINGS.
2. SEE STANDARD REACTION BLOCK TABLES, W-10 AND W-11 FOR AREA OF CONCRETE REQUIRED.

CITY OF RALEIGH
DEPARTMENT OF PUBLIC UTILITIES
4" - 24" STANDARD TAPPING SLEEVE AND VALVE ASSEMBLY

DWG. NO.	REVISIONS	DATE	REVISIONS	DATE
W-14	Y.C.A.	12-31-91	RRH	3-31-00
	D.W.C.	9-7-99	J.P.S.	11-1-10

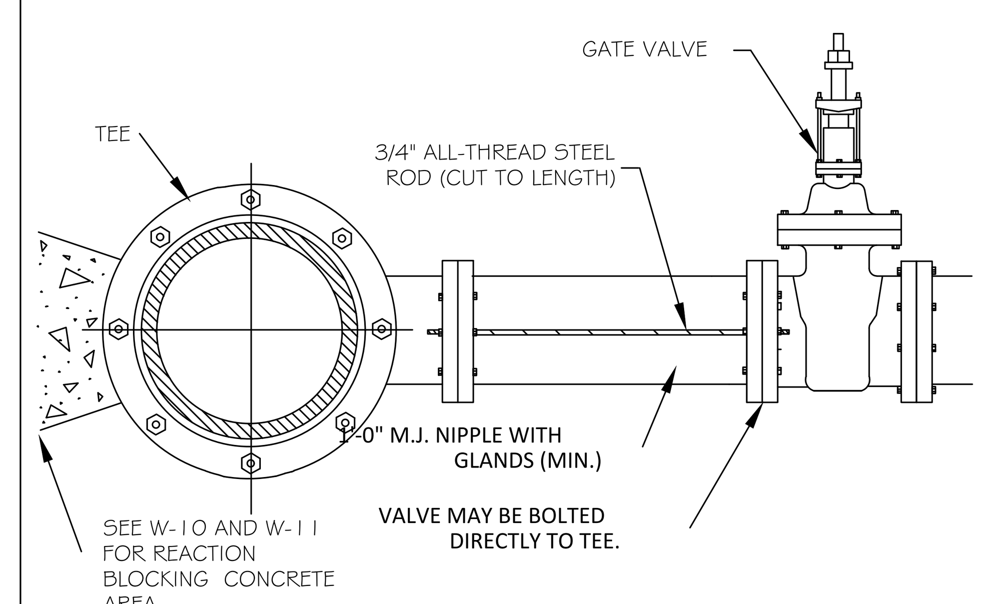

ROD REQUIREMENTS

NO. OF RODS	BRANCH SIZE
4"	2
6"	2
8"	4
12"	4
16"	6
24"	6
30"	8
36"	8

NOTES:
1. STEEL RODS AND BOLTS SHALL BE 3/4" HOT DIPPED GALVANIZED.
2. SEE STANDARD THRUST BLOCK. TABLES W-10 AND W-11 FOR CONCRETE.
3. CONCRETE SHALL NOT CONTACT BOLTS OR ENDS OF MECHANICAL FITTINGS.
4. THIS RODDING REQUIREMENT DOES NOT APPLY TO FIRE HYDRANTS.

CITY OF RALEIGH
DEPARTMENT OF PUBLIC UTILITIES
VALVE RESTRAINT AT TEES AND CROSSES FOR LINES (4"-24")

DWG. NO.	REVISIONS	DATE	REVISIONS	DATE
W-15	RRH	3-31-00	D.H.L.	6-16-08
	A.B.B.	4-19-04	J.P.S.	11-1-10

APPROVED METHOD FOR EXTENSION OF VALVE BOX

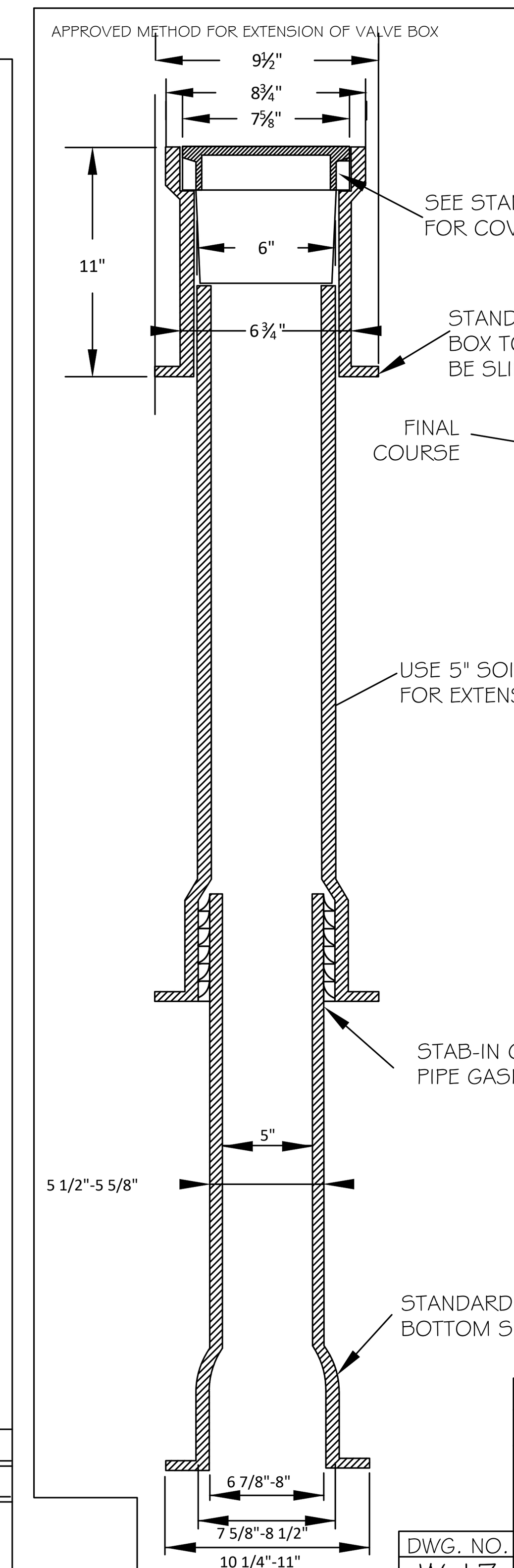

NOTE: 2'x 2'x 6" CONCRETE PAD REQUIRED ON ALL VALVES. NO PRECAST CONCRETE DOUGHNUT ALLOWED.

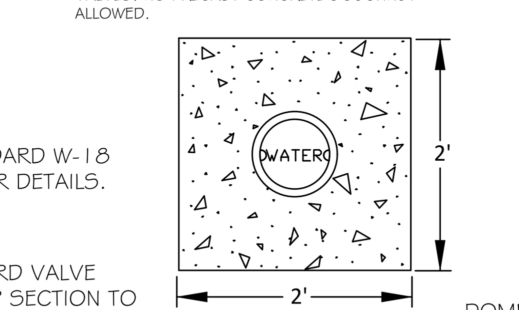

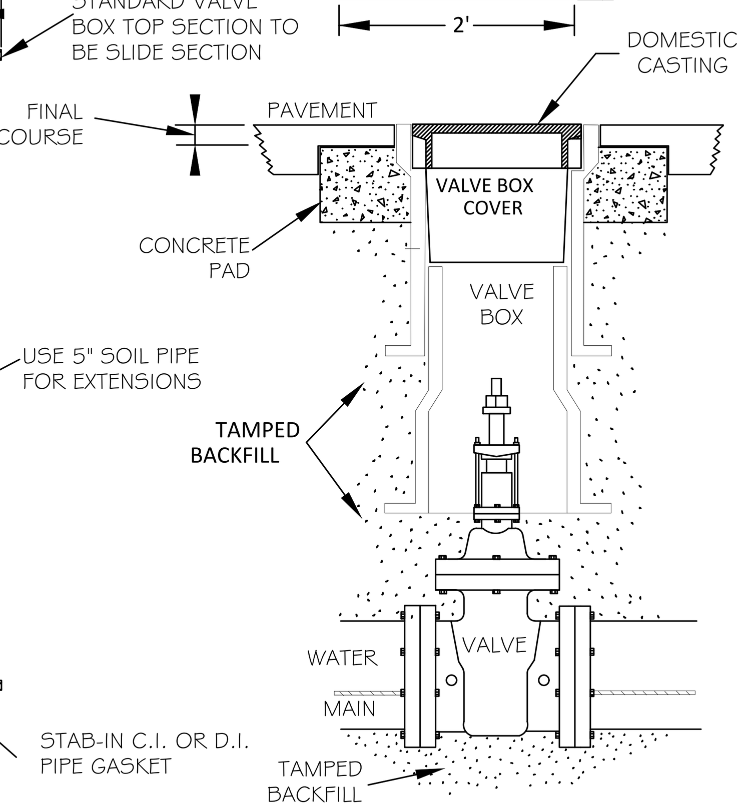

NOTES:
1) VALVE BOX NOT TO CONTACT WATER MAIN
2) ALL TRAFFIC CASTINGS MUST BE CLASS 35 OR GREATER.
3) FOR ANY VALVES OVER 10' DEEP, A VALVE STEM EXTENSION MUST BE USED TO BRING TO A DEPTH OF NO MORE THAN 5', EXTENSION MUST BE A MINIMUM OF 1" SOLID STOCK.
4) TOTAL VALVE BOX WEIGHT: MINIMUM OF 85 LBS.

CITY OF RALEIGH
DEPARTMENT OF PUBLIC UTILITIES
VALVE BOX INSTALLATION AND EXTENSION DETAIL

DWG. NO.	REVISIONS	DATE	REVISIONS	DATE
W-17	D.W.C.	9-7-99	A.B.B.	4-15-04
	RRH	3-31-00	DHL	8-16-07

CITY OF RALEIGH - PLANS AUTHORIZED FOR CONSTRUCTION

Electronic Approval: This approval is being issued electronically. This approval is valid only upon the signature of a City of Raleigh Review Officer below. The City will retain a copy of the approved plans. Any work authorized by this approval must proceed in accordance with the plans kept on file with the City. This electronic approval may not be edited once issued. Any modification to this approval once issued will invalidate this approval.

City of Raleigh Development Approval ____________________

Raleigh Water Review Officer

North Carolina 811 www.nc811.org
*** 3 Days Before Digging ***
North Carolina 811
811 or 1-800-632-4949
Remote Ticket Entry
http://nc811.org/remoteticketentry.htm

AMERICAN Engineering
American Engineering Associates - Southeast, P.A.
4020 Westchase Boulevard, Suite 450
Raleigh, NC 27607
919-469-1101

NORTH CAROLINA AMERICAN ENGINEERING ASSOCIATES SOUTHEAST C-3881 CERTIFICATE OF AUTHORIZATION

PRELIMINARY - DO NOT USE FOR CONSTRUCTION
NORTH CAROLINA PROFESSIONAL SEAL 056528 ENGINEER JAKOB P. KLEIN
Digitally signed by Jakob Klein Date: 2024.12.02 16:13:09 -05'00'

NO.	DATE	REVISION:

STIPULATION FOR REUSE

THIS DRAWING WAS PREPARED FOR USE ON THE SPECIFIC SITE, NAMED HEREON, CONTEMPORANEOUSLY WITH ITS ISSUE DATE AS LISTED, HEREON. AND IT IS NOT SUITABLE FOR USE ON A DIFFERENT PROJECT SITE OR AT A LATER TIME. USE OF THIS DRAWING FOR REFERENCE OR EXAMPLE ON ANOTHER PROJECT REQUIRES THE SERVICES OF PROPERLY LICENSED ARCHITECTS AND ENGINEERS. REPRODUCTION OF THIS DRAWING FOR REUSE ON ANOTHER PROJECT IS NOT AUTHORIZED AND MAY BE CONTRARY TO THE LAW.

THE PRESERVE AT MOODY FARM
ROLESVILLE ROAD
WAKE COUNTY, NC

JOB NUMBER: 21-002
CHECKED BY: JK
DRAWN BY: RC & SM
DATE: 12/02/2024

SHEET TITLE:
UTILITY DETAILS

SHEET NO.:
CD7

Z:\Jobs\21-002 Moody Development Tract (R210002)\dwg_Working Dwgs\Construction Set\CD1 Project Details.dwg   December 2, 2024

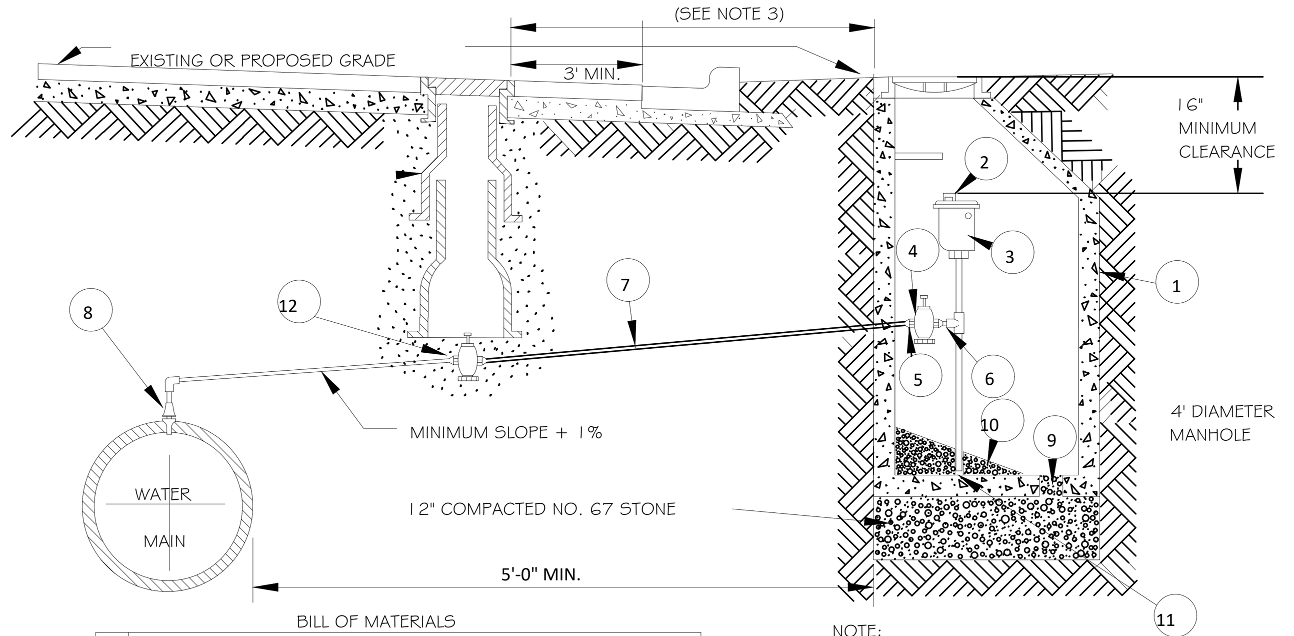

BILL OF MATERIALS

1	PRECAST MANHOLE, SEE STANDARD DETAIL S-20
2	TRASH HOOD
3	2" AIR RELEASE VALVE
4	2" CURB STOP BALL VALVE
5	ADAPTER
6	2" MECHANICAL JOINT BRASS PIPE AND FITTINGS
7	2" TYPE "K", SOFT COPPER WITH FLARED ELBOW
8	CORPORATION COCK
9	6" DIAMETER DRAIN
10	GROUT, 1/8" TO 1'-0" MIN. SLOPE TO DRAIN
11	PIPE CAP
12	2"-GATE VALVE

SEE STANDARD DETAIL W-3 TO INSURE PROPER BACKFILL.

NOTE:
1. AIR VALVE TO BE P-20 WITH VACUUM CHECK BY CRISPIN OR VAL MATIC VM 45.
2. THE AIR RELEASE MANHOLE SHALL BE INSTALLED IN THE SHOULDER OR AS DIRECTED BY THE ENGINEER.
3. FOR MAINS LOCATED OUTSIDE OF STREET RIGHT-OF-WAYS THE MAXIMUM DISTANCE BETWEEN THE MANHOLE AND THE VALVE BOX SHOULD BE THREE (3) FEET.
4. MAIN SHALL BE DEEP ENOUGH TO ACCOMODATE INSTALLATION AS SHOWN

CITY OF RALEIGH
DEPARTMENT OF PUBLIC UTILITIES
STANDARD WATER AIR RELEASE VALVE

DWG. NO.	REVISIONS	DATE	REVISIONS	DATE
W-19	ABB	10-4-04	RRH	12-31-91
	J.P.S.	11-1-10		6-7-00

MAIN SIZE	END PIPE SIZE
16" & GREATER	6" MIN.
6" - 12"	APPROVED BY PUBLIC UTILITIES DEPT.

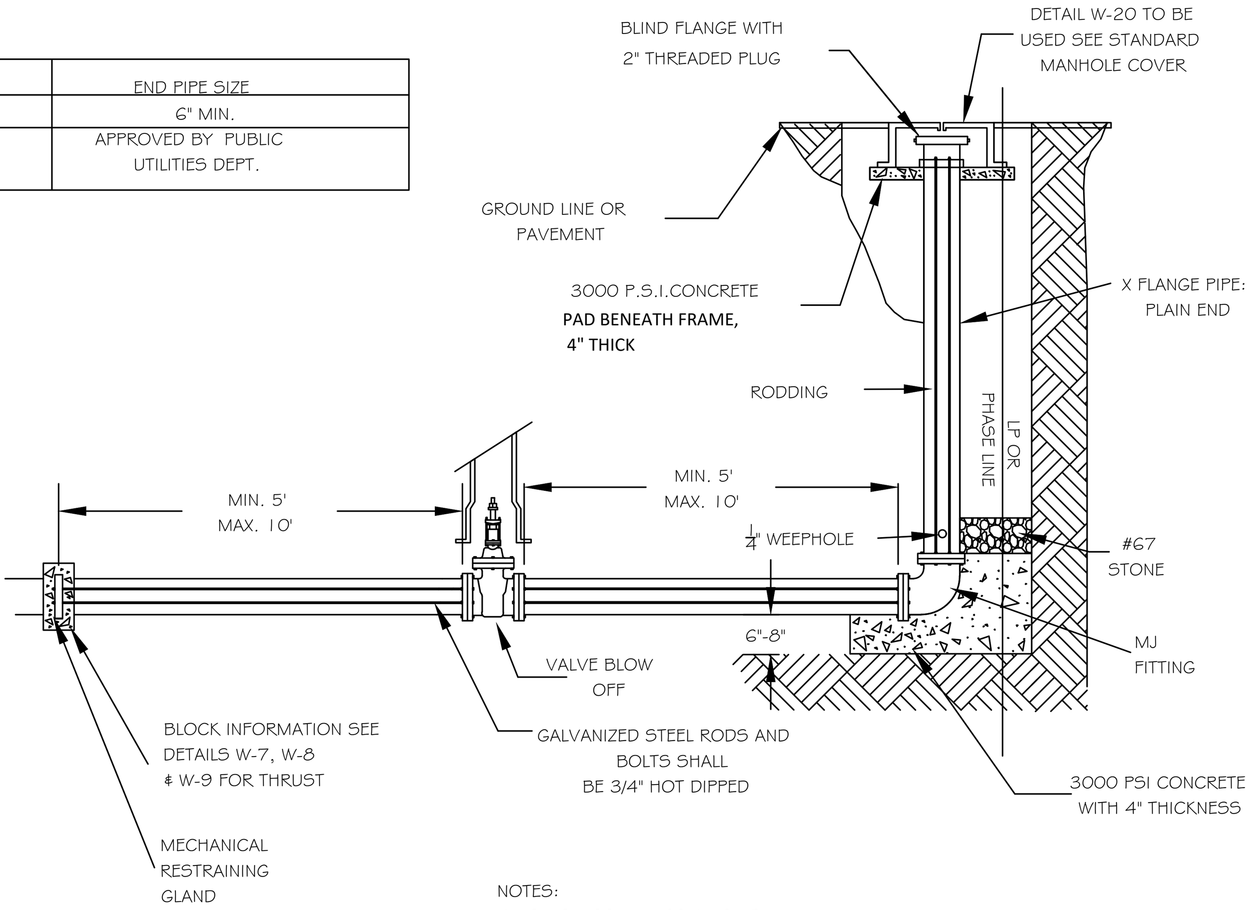

NOTES:
1) NO ROD COUPLINGS ALLOWED

CITY OF RALEIGH
DEPARTMENT OF PUBLIC UTILITIES
TEMPORARY WATER MAIN BLOW OFF ASSEMBLY

DWG. NO.	REVISIONS	DATE	REVISIONS	DATE
W-21	D.W.C.	12-28-99	A.B.B.	4-12-04
	RRH	3-31-00	DHL	8-16-07

NOTE: NO ENCASEMENT REQUIRED FOR SPACE GREATER THAN 18" FOR WATER LINES

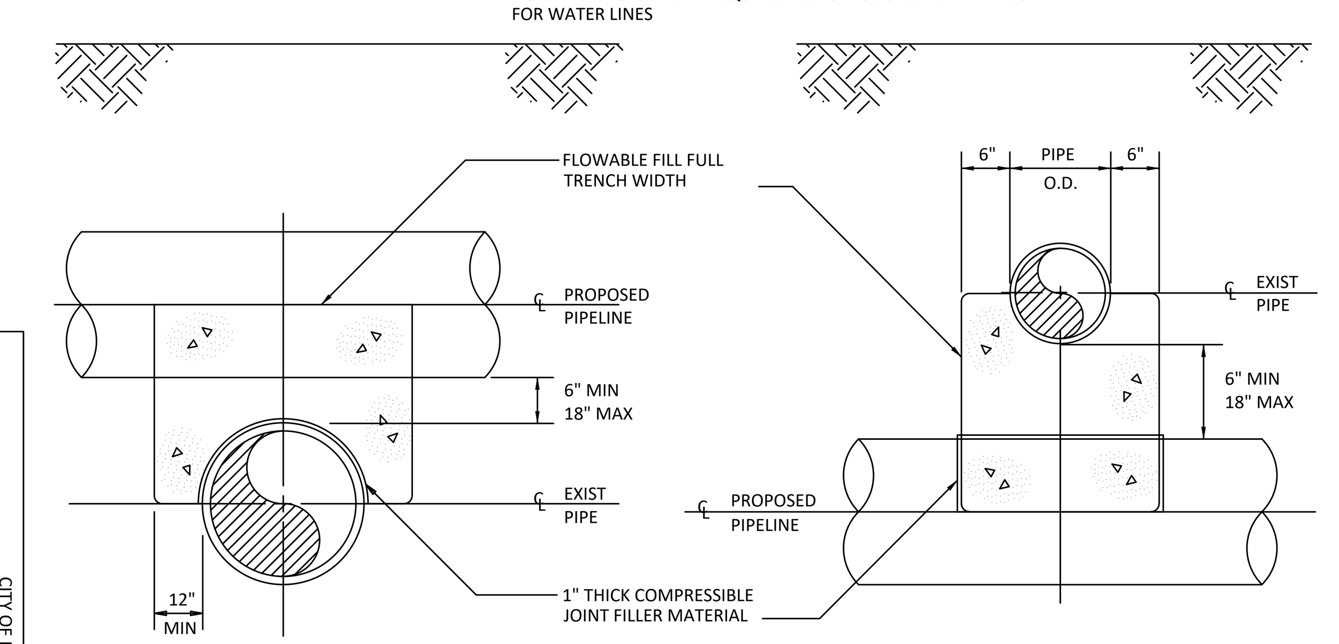

PROPOSED PIPELINE OVER EXISTING PIPE

PROPOSED PIPELINE UNDER EXISTING PIPE

CITY OF RALEIGH
DEPARTMENT OF PUBLIC UTILITIES
CONCRETE CRADLE PROTECTION FOR WATER LINE CROSSINGS

DWG. NO.	REVISIONS	DATE	REVISIONS	DATE
W-41	DHL	2-20-08		

PROJECT REFERENCE NO.	SHEET NO.

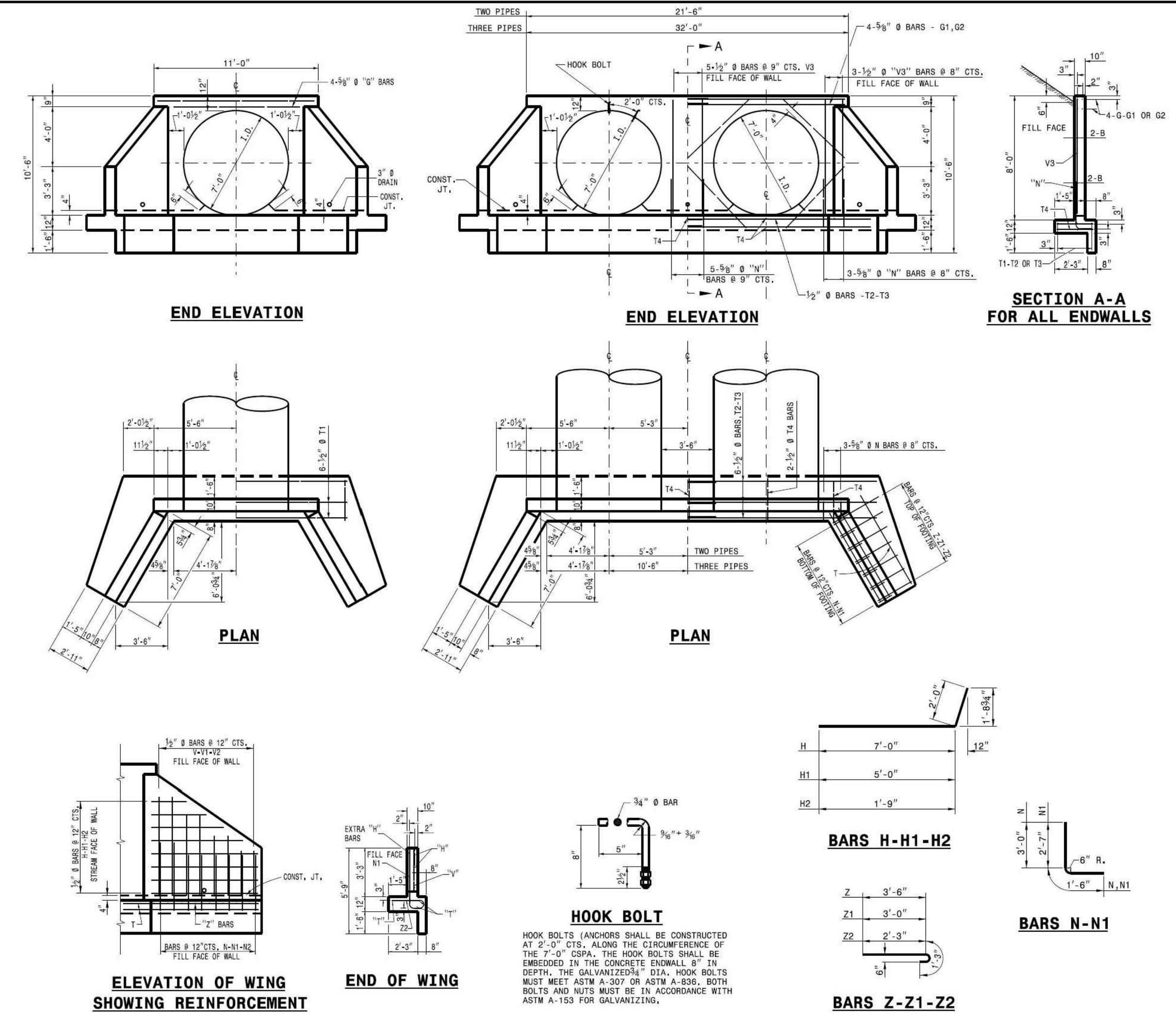

NOTES:

ALL CONCRETE TO BE CLASS "A".

ALL REINFORCING STEEL SHALL BE ASTMA615-GRADE 60.

ALL REINFORCING STEEL SHALL BE DEFORMED BARS. WHERE SPLICING OF REINFORCMENT IS NECESSARY, BARS ARE TO BE LAPPED 45 DIAMETERS. ALL DIMENSIONS RELATIVE TO REINFORCEMENT ARE TO CENTERS OF BARS.

THE FOOTING, CURTAIN WALL AND 4" OF WALL ARE TO BE POURED IN ONE OPERATION ALLOWING NO TIME FOR INITIAL SET TO TAKE PLACE BETWEEN THEM. THE REMAINING WALL SHALL THEN BE POURED IN ONE OPERATION.

ALL EXPOSED CORNERS ARE TO BE CHAMFERED 1".

3" DIAMETER DRAINS SHALL BE PLACED IN WALL AS SHOWN AND BE 6" ABOVE NORMAL FLOW LINE.

ALL MATERIAL AND WORKMANSHIP AS PER N.C.DEPARTMENT OF TRANSPORTATION STANDARD SPECIFICATIONS.

BILL OF MATERIAL FOR ONE ENDWALL

REINFORCING STEEL			1 PIPE		2 PIPES		3 PIPES	
BAR	SIZE	LENGTH	NO.	WEIGHT	NO.	WEIGHT	NO.	WEIGHT
B	#4	6'-0"	8	32	16	64	24	96
G	#5	10'-9"	4	45	-	-	-	-
G1	#5	11'-9"	-	-	8	98	-	-
G2	#5	17'-0"	-	-	-	-	8	142
H	#4	9'-0"	10	60	10	60	10	60
H1	#4	7'-0"	6	28	6	28	6	28
H2	#4	3'-9"	4	10	4	10	4	10
N	#5	4'-6"	10	47	15	70	20	94
N1	#4	4'-1"	10	27	10	27	10	27
T	#4	6'-6"	6	26	6	26	6	26
T1	#4	15'-0"	6	60	-	-	-	-
T2	#4	13'-9"	-	-	12	110	-	-
T3	#4	19'-0"	-	-	-	-	12	152
T4	#4	2'-9"	4	7	7	13	10	18
V	#4	5'-9"	6	23	6	23	6	23
V1	#4	4'-6"	6	18	6	18	6	18
V2	#4	2'-9"	8	15	8	15	8	15
V3	#4	7'-6"	6	30	11	55	16	80
Z	#5	4'-9"	4	20	4	20	4	20
Z1	#4	4'-3"	4	11	4	11	4	11
Z2	#4	3'-6"	6	14	6	14	6	14
TOTAL REINF. STEEL (lbs.)				473		662		834
CLASS "A" CONC. (cu. yds.)				7.9		10.8		13.8

CONTRACT STANDARDS & DEVELOPMENT UNIT
STANDARDS AND SPECIAL DESIGN
Office 919-707-6950 FAX 919-250-4119

DETAIL OF REINFORCED CONCRETE ENDWALL FOR 84" DIAMETER PIPE - 90° SKEW

ORIGINAL BY: R.S.WICKER DATE: 6-46
MODIFIED BY: R.E.D.&T.S.S. DATE: 6-96 & 5-00
CHECKED BY: DATE:
FILE SPEC.: details/nbritt/english/hydro/endwall90sk.dgn

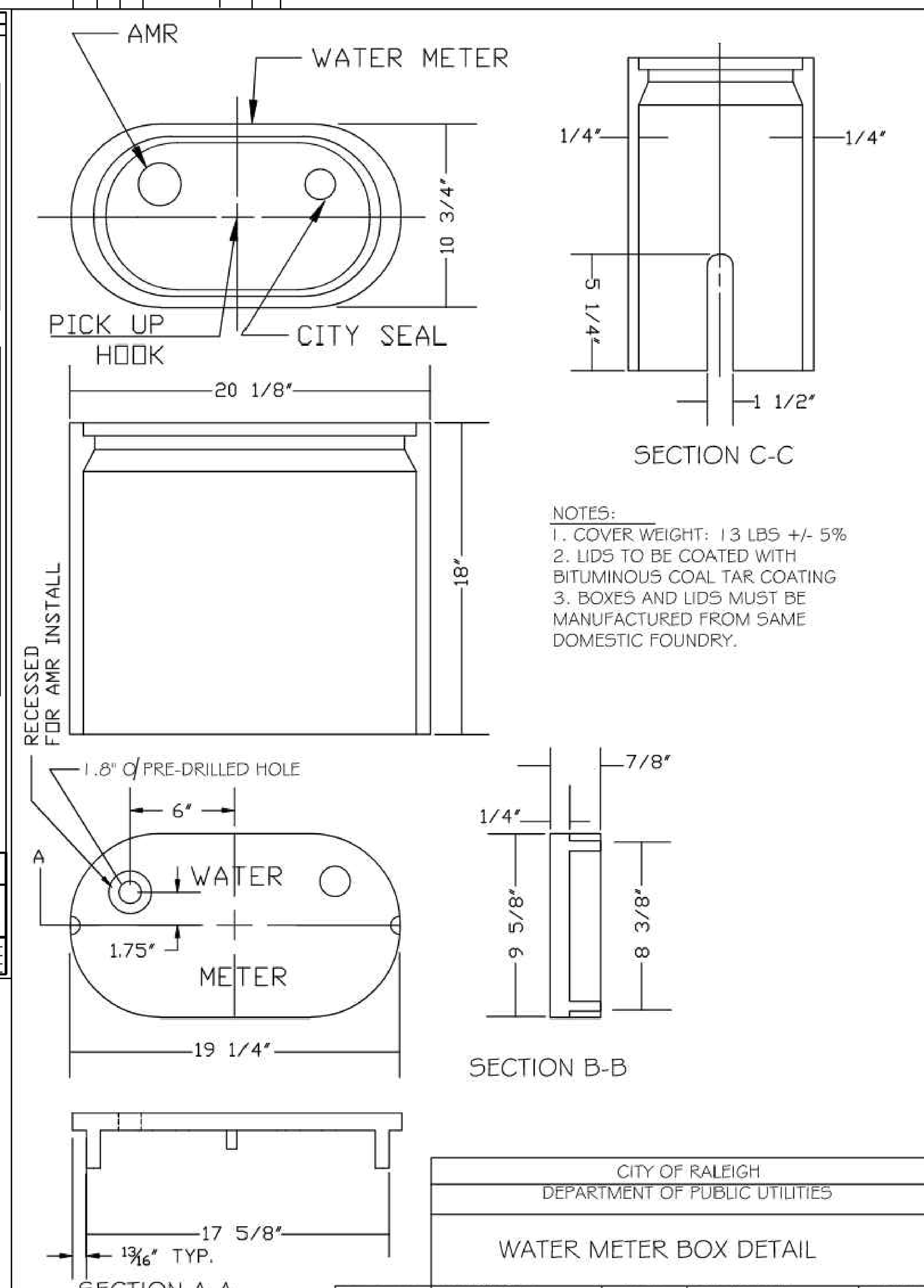

NOTES:
1. COVER WEIGHT: 13 LBS +/- 5%
2. LIDS TO BE COATED WITH BITUMINOUS COAL TAR COATING
3. BOXES AND LIDS MUST BE MANUFACTURED FROM SAME DOMESTIC FOUNDRY.

CITY OF RALEIGH
DEPARTMENT OF PUBLIC UTILITIES
WATER METER BOX DETAIL

DWG. NO.	REVISIONS	DATE	REVISIONS	DATE
W-25			ABB	1-20-05
	R.K.V.	8-20-13	J.P.S	11-4-10

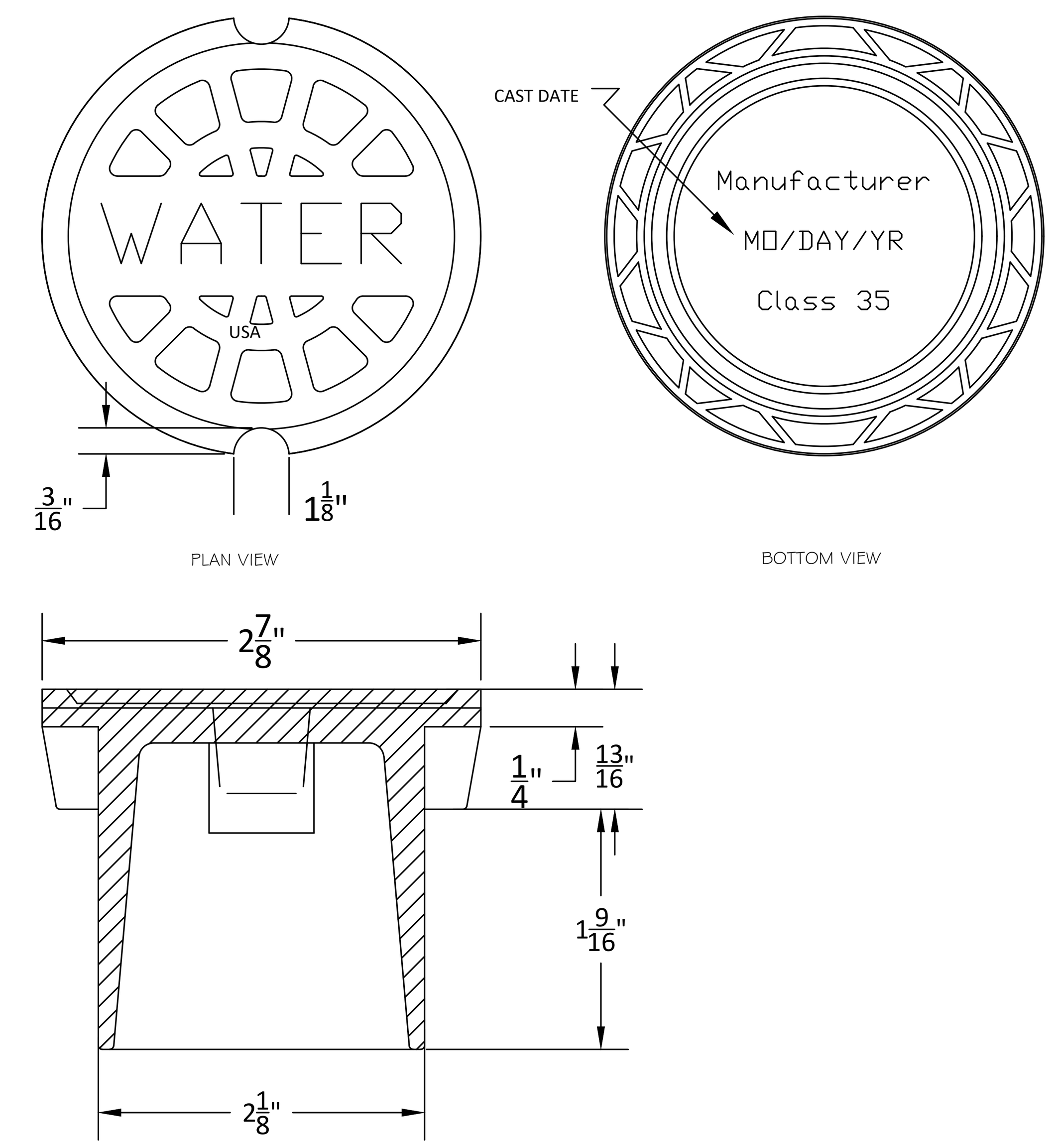

NOTE 1 - "WATER" LETTERING MUST BE 1" RAISED (RECESSED FLUSH)
NOTE 2 - VALVE COVER SHALL BE DOMESTICALLY CAST.
NOTE 3 - COVER MUST HAVE A MINIMUM WEIGHT OF 25 POUNDS.
NOTE 4 - COVER MUST BE CLASS 35 OR GREATER.
NOTE 5 - COVER MUST MEET OR EXCEED AASHTO H-20 LOAD REQUIREMENTS.

CITY OF RALEIGH
DEPARTMENT OF PUBLIC UTILITIES
5 1/4" VALVE BOX DROP LID WITH 4" SKIRT

DWG. NO.	REVISIONS	DATE		
W-18				

MANHOLE FRAME AND COVER
COVER 120 LBS. MINIMUM

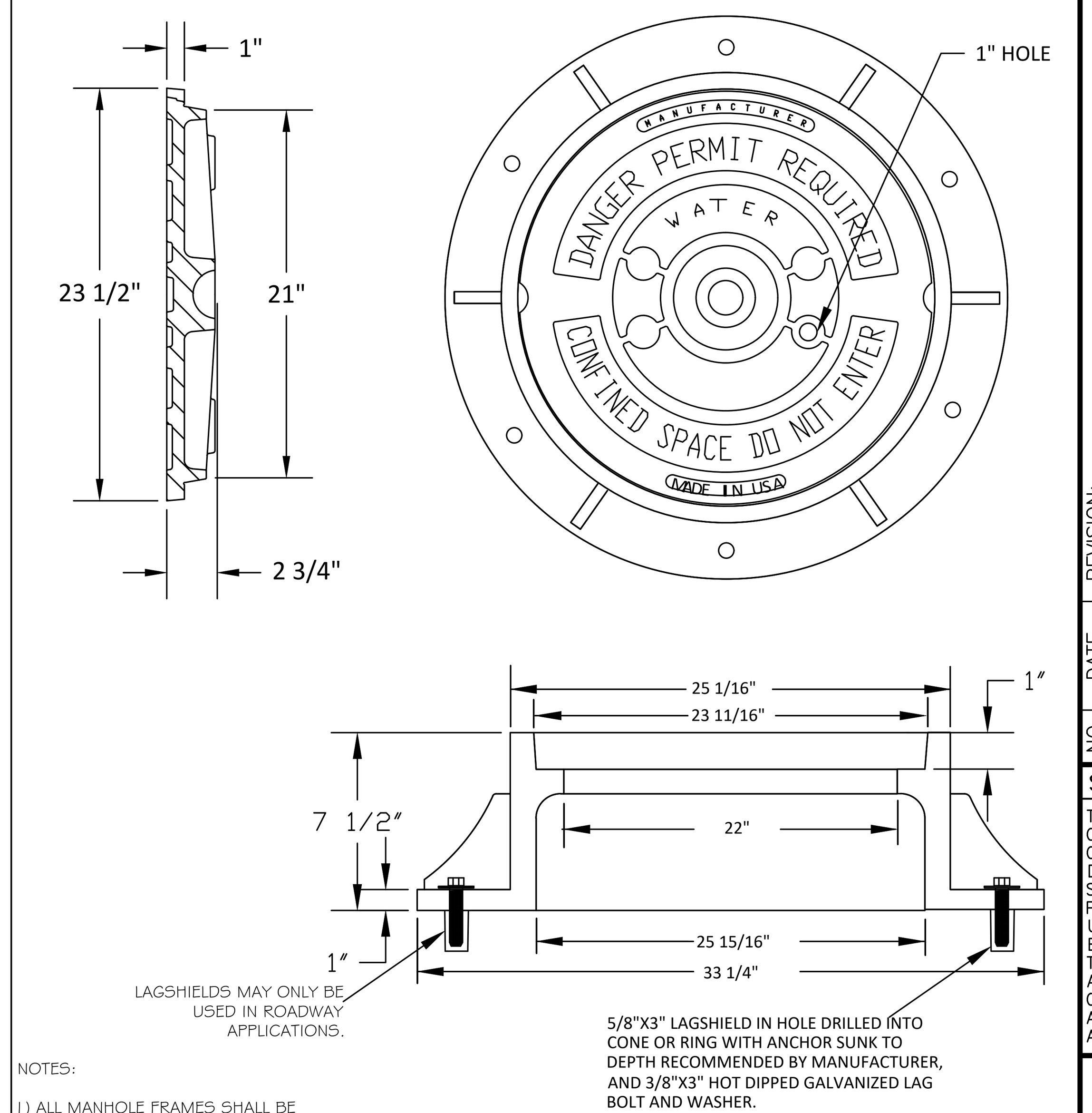

NOTES:
1) ALL MANHOLE FRAMES SHALL BE BE DOMESTICALLY CAST
2) FRAME SHALL BE A MINIMUM WEIGHT OF 182 LBS.
3) COVER SHALL WEIGH A MIN. OF 120 LBS.
4) MANHOLES WITHIN PAVED SURFACES SHALL BE CONSTRUCTED IN ACCORDANCE WITH S-29.

CITY OF RALEIGH
DEPARTMENT OF PUBLIC UTILITIES
STANDARD MANHOLE COVER

DWG. NO.	REVISIONS	DATE	REVISIONS	DATE
W-20	A.B.B.	4-8-04		
	D.H.L.	6-18-08		

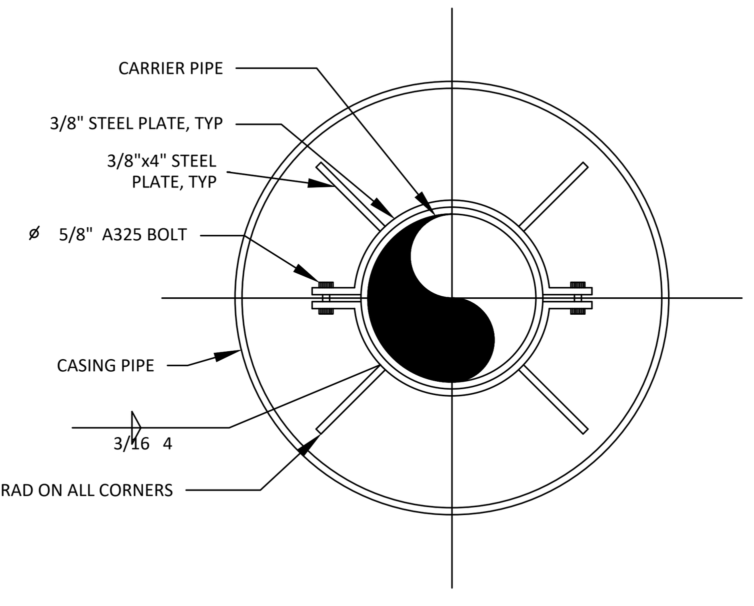

NOTE:

1) USE A MINIMUM OF TWO SPIDERS PER PIPE JOINT ONE FOURTH OF THE PIPE JOINT LENGTH IN FROM BOTH THE BELL AND SPIGOT ENDS.

CITY OF RALEIGH
DEPARTMENT OF PUBLIC UTILITIES
PIPE ALIGNMENT GUIDE

DWG. NO.	REVISIONS	DATE	REVISIONS	DATE
W-40	RRH	3-31-00		
	A.B.B.	4-16-04		

CITY OF RALEIGH - PLANS AUTHORIZED FOR CONSTRUCTION

Electronic Approval: This approval is being issued electronically. This approval is valid only upon the signature of a City of Raleigh Review Officer below. The City will retain a copy of the approved plans. Any work authorized by this approval must proceed in accordance with the plans kept on file with the City. This electronic approval may not be edited once issued. Any modification to this approval once issued will invalidate this approval.

City of Raleigh Development Approval ______________________

Raleigh Water Review Officer

North Carolina 811
www.nc811.org
*** 3 Days Before Digging ***
North Carolina 811
811 or 1-800-632-4949
Remote Ticket Entry
http://nc811.org/remoteticketentry.htm

AMERICAN Engineering
American Engineering Associates - Southeast, P.A.
4020 Westchase Boulevard, Suite 450
Raleigh, NC 27607
919-469-1101

NORTH CAROLINA AMERICAN ENGINEERING ASSOCIATES SOUTHEAST C-3881 CERTIFICATE OF AUTHORIZATION

PRELIMINARY - DO NOT USE FOR CONSTRUCTION
NORTH CAROLINA PROFESSIONAL SEAL 56528 ENGINEER JAKOB P. KLEIN
Digitally signed by Jakob Klein Date: 2024.12.02 16:11:10 -05'00'

NO.	DATE	REVISION:

STIPULATION FOR REUSE

THIS DRAWING WAS PREPARED FOR USE ON THE SPECIFIC SITE, NAMED HEREON, CONTEMPORANEOUSLY WITH ITS ISSUE DATE AS LISTED, HEREON. AND IT IS NOT SUITABLE FOR USE ON A DIFFERENT PROJECT SITE OR AT A LATER TIME. USE OF THIS DRAWING FOR REFERENCE OR EXAMPLE ON ANOTHER PROJECT REQUIRES THE SERVICES OF PROPERLY LICENSED ARCHITECTS AND ENGINEERS. REPRODUCTION OF THIS DRAWING FOR REUSE ON ANOTHER PROJECT IS NOT AUTHORIZED AND MAY BE CONTRARY TO THE LAW.

THE PRESERVE AT MOODY FARM
ROLESVILLE ROAD
WAKE COUNTY, NC

JOB NUMBER: 21-002
CHECKED BY: JK
DRAWN BY: RC & SM
DATE: 12/02/2024

SHEET TITLE:
UTILITY DETAILS

SHEET NO.:
CD8

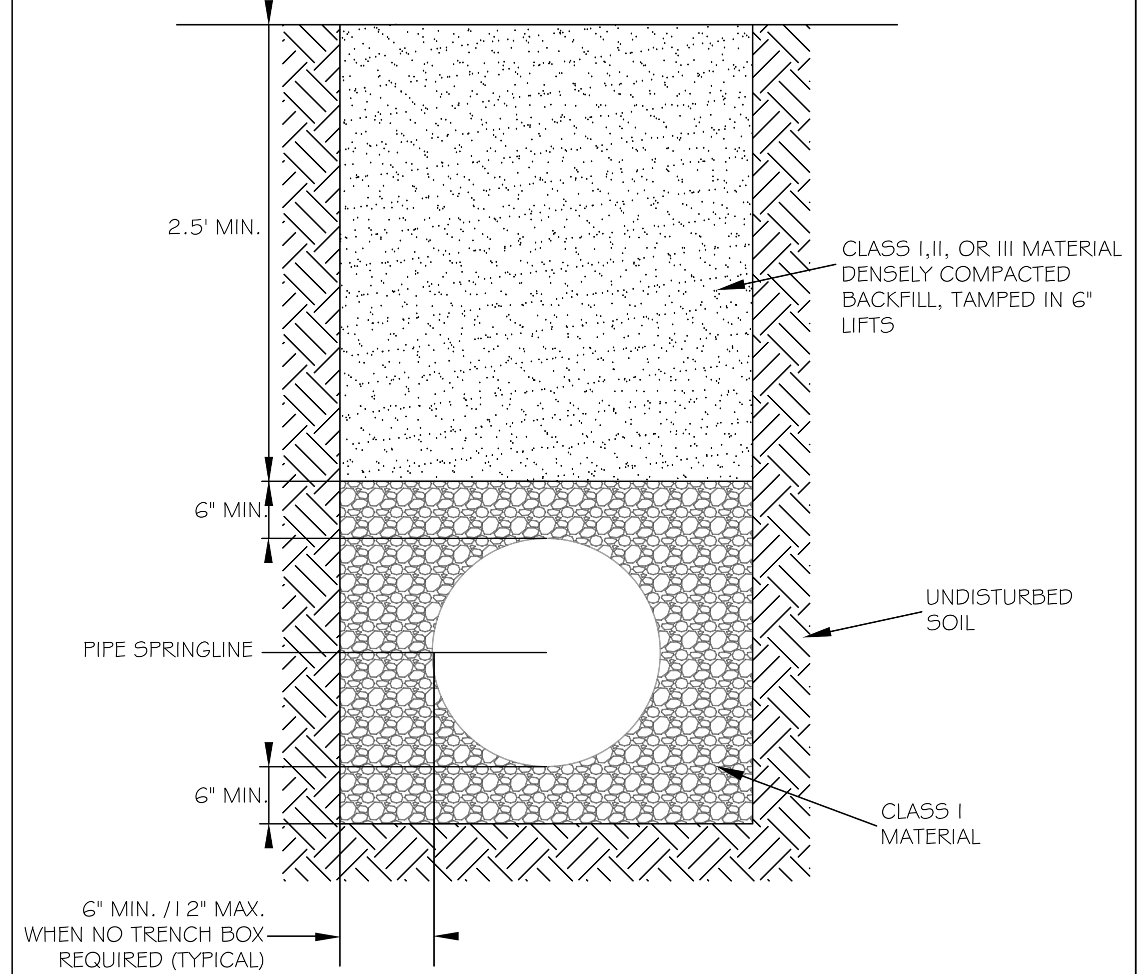

CITY OF RALEIGH				
DEPARTMENT OF PUBLIC UTILITIES				
STANDARD BEDDING DETAILS FOR CCFRPM PIPES				
DWG. NO.	REVISIONS	DATE	REVISIONS	DATE
S-1	J.P.S	10-8-10		

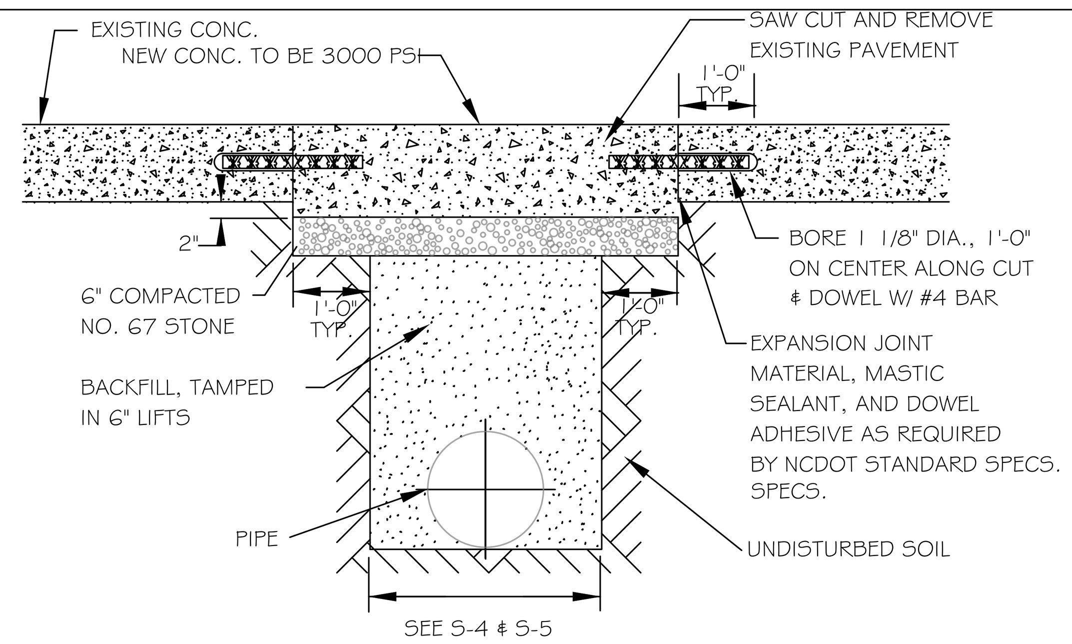

NOTES:
1. See City of Raleigh standards for trenches and pipe bedding (S-4 & S-5) for additional details.
2. Pavement cuts over 5'-0" in width shall be reinforced to N.C.D.O.T. standards.
3. Pavement cuts shall be made with an appropriate saw cut machine.
4. Pavement cuts within NCDOT ROW shall conform to the approved on site encroachment permit.

CITY OF RALEIGH				
DEPARTMENT OF PUBLIC UTILITIES				
STANDARD CONCRETE PAVEMENT PATCH DETAIL				
DWG. NO.	REVISIONS	DATE	REVISIONS	DATE
S-2	D.W.C.	6-23-99	A.B.B.	4-19-04
	RRH	3-30-00	J.P.S	10-8-10

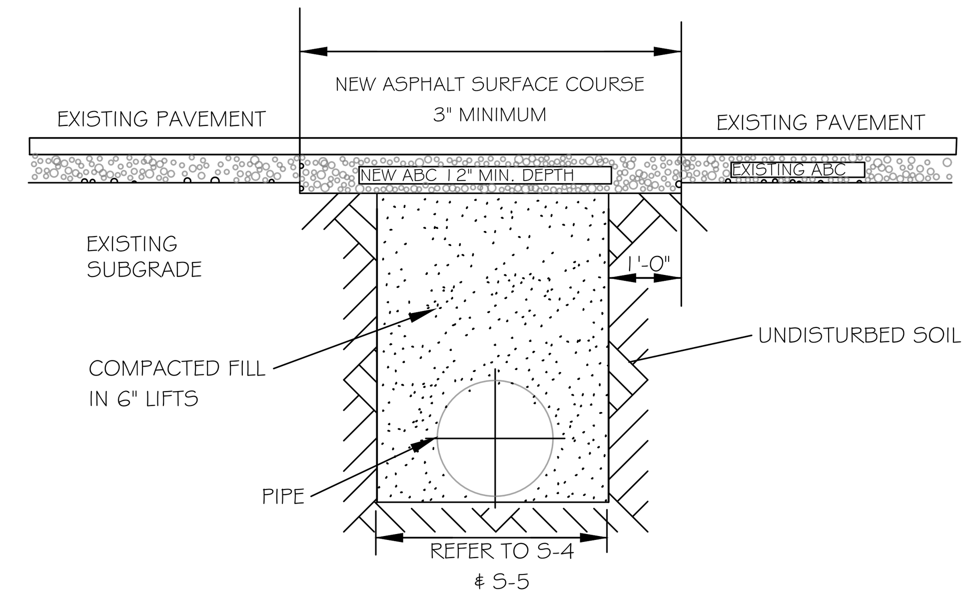

NOTES:
1. IN NCDOT MAINTAINED ROADWAYS ENCROACHMENT PAVEMENT PATCH REQUIREMENTS SHALL TAKE PRECEDENCE.
2. THE PAVEMENT CUT SHALL BE DEFINED BY A STRAIGHT EDGE AND CUT WITH AN APPROPRIATE SAWCUT MACHINE.
3. THE TRENCH SUBGRADE MATERIAL SHALL BE BACKFILLED WITH SUITABLE MATERIAL AND COMPACTED TO A DENSITY OF AT LEAST 95% OF THAT OBTAINED BY COMPACTING A SAMPLE OF THE MATERIAL IN ACCORDANCE WITH AASHTO T-99 AS MODIFIED BY NCDOT.
4. THE FINAL 1' OF FILL SHALL CONSIST OF ABC MATERIAL COMPACTED TO A DENSITY EQUAL TO 100% OF THAT OBTAINED BY COMPACTING A SAMPLE OF THE MATERIAL IN ACCORDANCE WITH AASHTO T-80 AS MODIFIED BY NCDOT.
5. THE ENTIRE THICKNESS AND VERTICAL EDGE OF CUT SHALL BE TACKED.
6. THE SAME DEPTH OF PAVEMENT MATERIAL WHICH EXISTS SHALL BE REINSTALLED, BUT IN NO CASE SHALL THE ASPHALT BE LESS THAN 3" THICK.
7. THE ASPHALT PAVEMENT MATERIAL SHALL BE INSTALLED AND COMPACTED THOROUGHLY WITH A SMOOTH DRUM ROLLER TO ACHIEVE A SMOOTH LEVEL PATCH.
8. REFER TO CITY OF RALEIGH STANDARDS FOR TRENCHES AND PIPE BEDDING (S-4 & S-5) FOR ADDITIONAL DETAILS.
9. NO HAND PATCHING ALLOWED.
10. PAVEMENT CUTS WITHIN NCDOT ROW SHALL CONFORM TO THE APPROVED ON SITE ENCROACHMENT PERMIT.

CITY OF RALEIGH				
DEPARTMENT OF PUBLIC UTILITIES				
STANDARD ASPHALT PAVEMENT PATCH DETAIL				
DWG. NO.	REVISIONS	DATE	REVISIONS	DATE
S-3	D.W.C.	11-1-99	A.B.B.	4-19-04
	RRH	3-30-00	J.P.S.	10-8-10

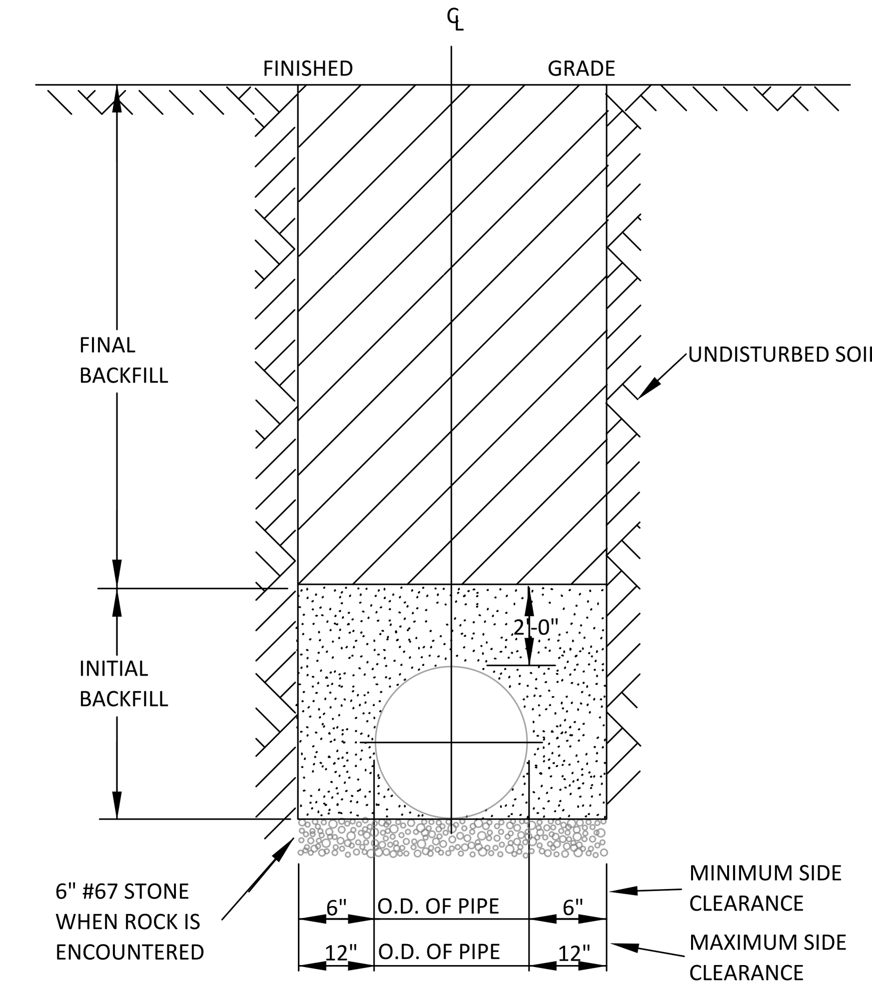

NOTES:
1. TRENCHES REQUIRING SHORING AND BRACING, DIMENSIONS SHALL BE TAKEN FROM THE INSIDE FACE OF THE SHORING AND BRACING.
2. NO ROCKS OR BOULDERS 4" OR LARGER TO BE USED IN INITIAL BACKFILL.
3. ALL BACKFILL MATERIAL SHALL BE SUITABLE NATIVE MATERIAL.
4. BACKFILL SHALL BE TAMPED IN 6" LIFTS IN TRAFFIC AREAS, 12" IN NON-TRAFFIC AREAS.
5. ACHIEVE 80% COMPACTION IN NON-TRAFFIC AREAS, AND 95% COMPACTION IN TRAFFIC AREAS.
6. IF IN EASEMENT 4" TOPSOIL, AND 12" CLEAN SELECT FILL MAY BE REQUIRED.
7. NO BOULDERS 8" IN DIAMETER OR GREATER ALLOWED IN FINAL BACKFILL.

CITY OF RALEIGH				
DEPARTMENT OF PUBLIC UTILITIES				
TRENCH BOTTOM DIMENSIONS & BACKFILLING REQUIREMENTS FOR DUCTILE IRON				
DWG. NO.	REVISIONS	DATE	REVISIONS	DATE
S-4	D.W.C.	9-3-99		
	RRH	3-30-00		

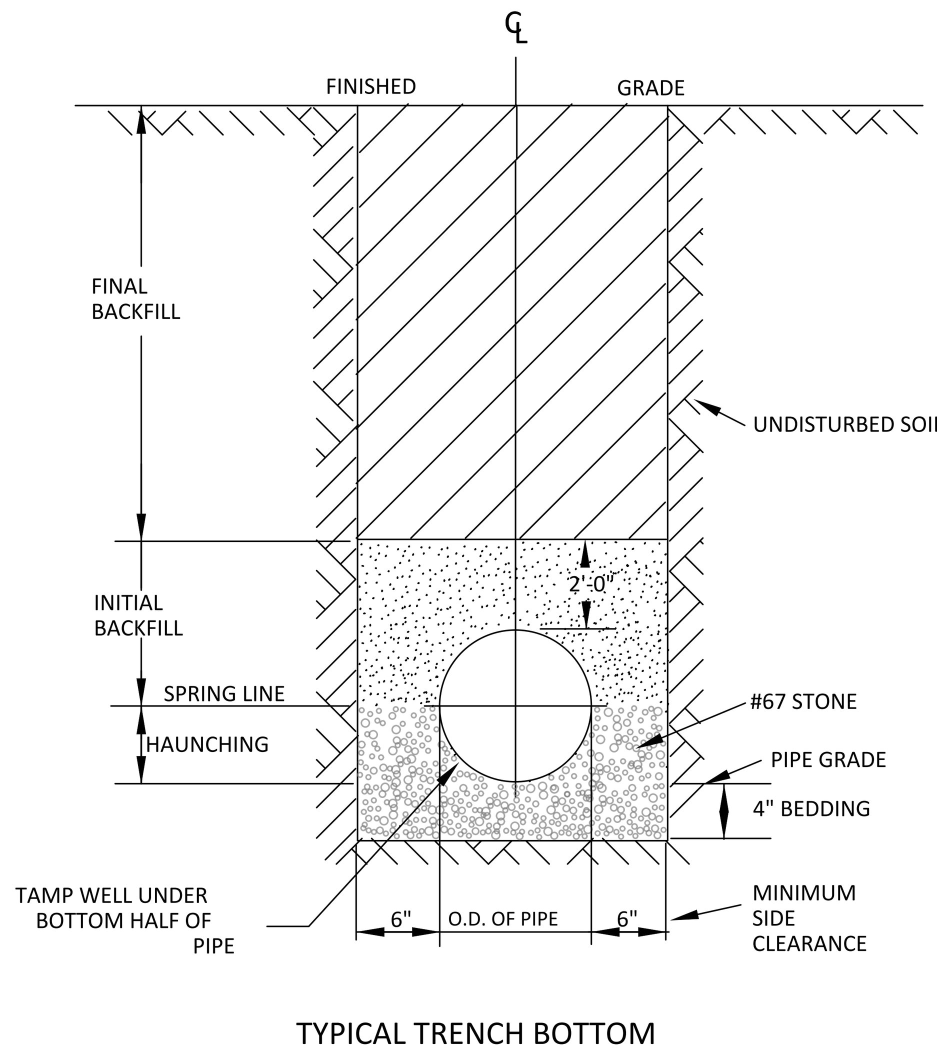

TYPICAL TRENCH BOTTOM DIMENSIONS FOR SDR 35 PVC GRAVITY PIPE

NOTES:
1. FOR TRENCHES REQUIRING SHORING AND BRACING, DIMENSIONS SHALL BE TAKEN FROM THE INSIDE FACE OF THE SHORING AND BRACING.
2. NO ROCKS OR BOULDERS 4" OR LARGER TO BE USED IN INITIAL BACKFILL.
3. ALL BACKFILL MATERIAL SHALL BE SUITABLE NATIVE MATERIAL.
4. BACKFILL SHALL BE TAMPED IN 6" LIFTS IN TRAFFIC AREAS, 12" IN NON-TRAFFIC AREAS.

CITY OF RALEIGH				
DEPARTMENT OF PUBLIC UTILITIES				
TRENCH BOTTOM DIMENSIONS AND BACKFILLING REQUIREMENTS FOR PVC GRAVITY SEWER MAIN				
DWG. NO.	REVISIONS	DATE	REVISIONS	DATE
S-5	TO NOTES	3-1-87	D.W.C.	9-3-99
		7-2-82	RRH	3-30-00

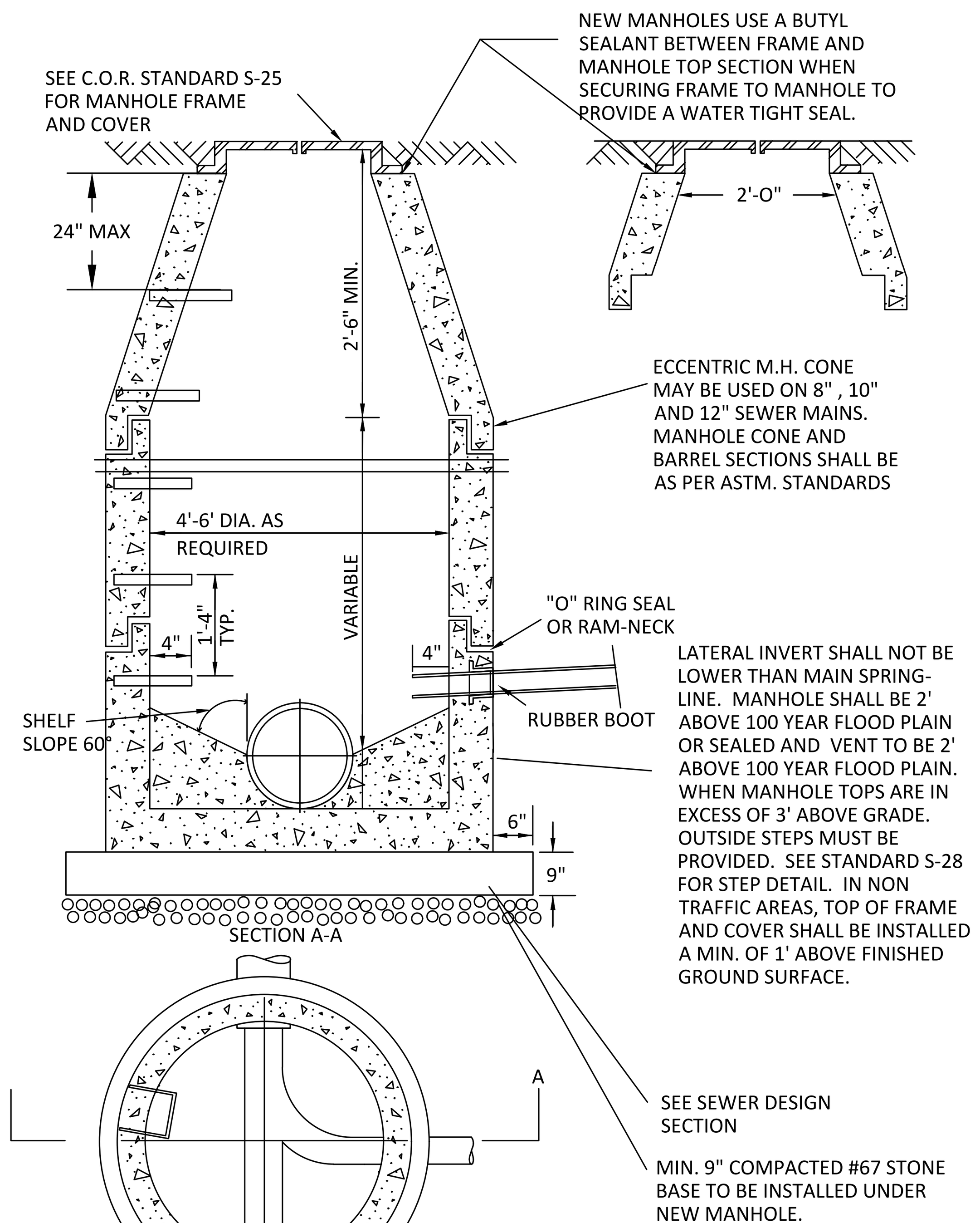

CITY OF RALEIGH				
DEPARTMENT OF PUBLIC UTILITIES				
STANDARD PRECAST SANITARY SEWER MANHOLE				
DWG. NO.	REVISIONS	DATE	REVISIONS	DATE
S-20	Y.C.A.	12-31-92	ABB	2-21-05
	RRH	3-30-00	D.H.L.	6-16-08

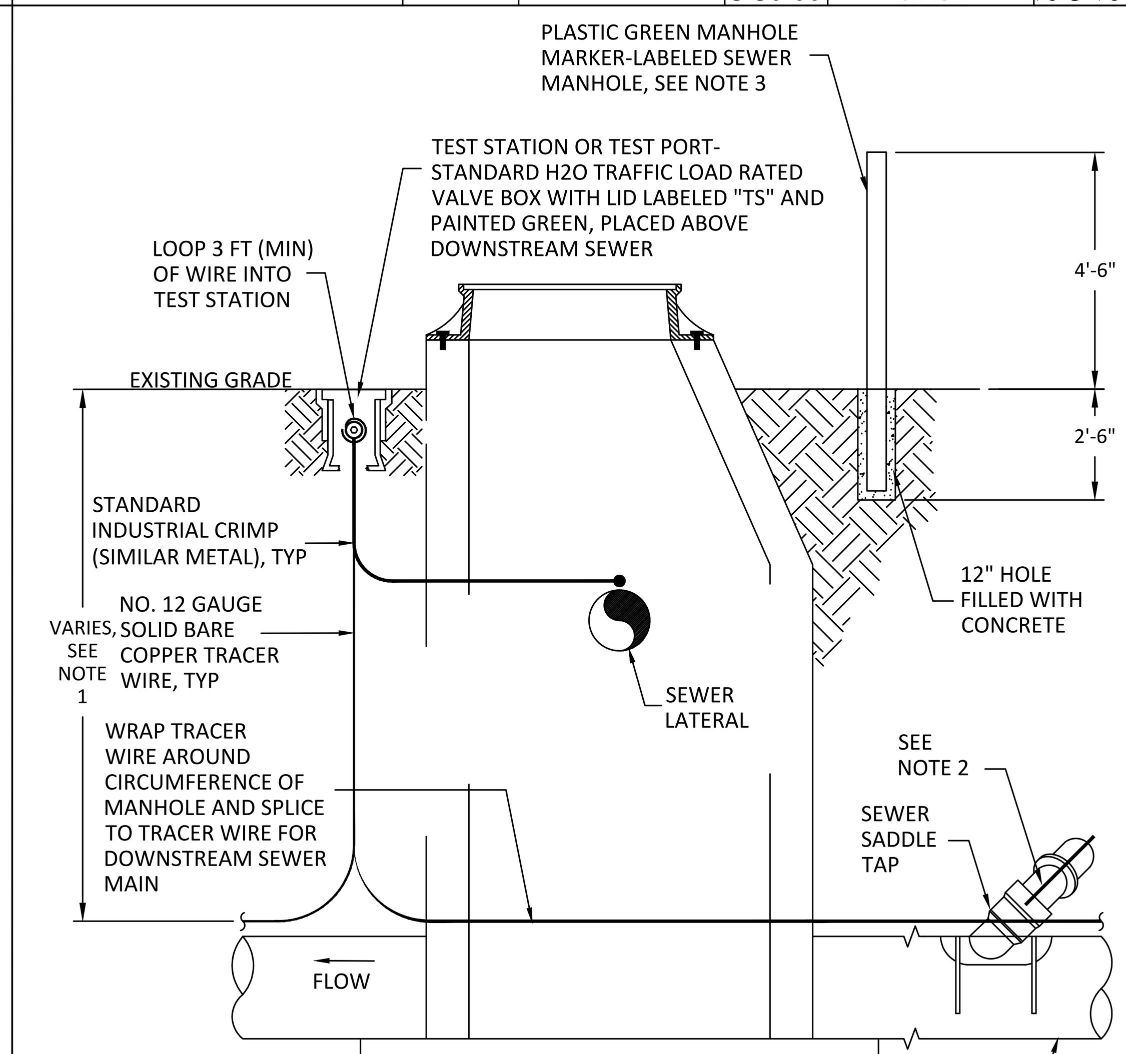

NOTES:
1. THE TRACER WIRE SHALL BE CONTINUOUS TO THE GREATEST EXTENT POSSIBLE. FOR GRAVITY MAIN AND OR LATERAL INSTALLATIONS LESS THAN 8 FT, THE TRACING WIRE SHALL BE ATTACHED TO THE PIPE. TRACER WIRE SHALL BE LAID FLAT AND SECURELY AFFIXED TO THE PIPE AT 10 FOOT INTERVALS. FOR GRAVITY MAIN AND OR LATERAL INSTALLATION DEEPER THAN 8 FT, THE TRACING WIRE SHALL BE INSTALLED AT A DEPTH OF 7-8 FT. THE WIRE SHALL BE PROTECTED FROM DAMAGE DURING THE EXECUTION OF THE WORK. NO BREAKS OF CUTS IN THE TRACER WIRE SHALL BE PERMITTED.
2. WHERE LATERAL TAPS ARE MADE BY SERVICE SADDLES, THE TRACER WIRE SHALL NOT BE ALLOWED TO TO BE PLACED BETWEEN THE SADDLE AND MAIN.
3. MANHOLE MARKERS SHALL BE PLACED ADJACENT TO MANHOLES AT THE DISCRETION OF OWNER OR OWNER'S REPRESENTATIVE.

CITY OF RALEIGH				
DEPARTMENT OF PUBLIC UTILITIES				
GRAVITY SEWER MAIN TRACER WIRE AND MANHOLE MARKER				
DWG. NO.	REVISIONS	DATE	REVISIONS	DATE
S-20A	WKD	09-14		

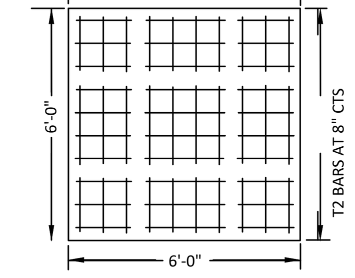

REINFORCED CONC. FOOTING FOR 4" PRECAST MANHOLE

BILL OF MATERIAL FOR 4' MANHOLE				
BAR	SIZE	LENGTH	NO.	WT. LBS.
T2	#5	5'-6"	18	103
CL. "A" CONCRETE TOTAL CU. YDS. 1,000				

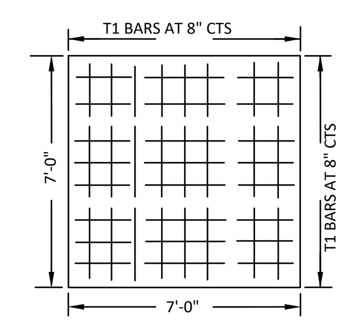

REINFORCED CONC. FOOTING FOR 5' PRECAST MANHOLE

BILL OF MATERIAL FOR 4' MANHOLE				
BAR	SIZE	LENGTH	NO.	WT. LBS.
T1	#5	6'-6"	20	136
CL. "A" CONCRETE TOTAL CU. YDS. 1,361				

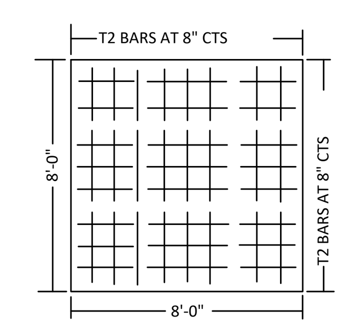

REINFORCED CONC. FOOTING FOR 6' PRECAST MANHOLE

BILL OF MATERIAL FOR 4' MANHOLE				
BAR	SIZE	LENGTH	NO.	WT. LBS.
T2	#5	7'-6"	24	165
CL. "A" CONCRETE TOTAL CU. YDS. 1,778				

* ALL BASES ARE MINIMUM 9" THICK

T1 OR T2 BAR

STRAIGHT BAR

CITY OF RALEIGH				
DEPARTMENT OF PUBLIC UTILITIES				
EXTENDED BASE OR CAST-IN-PLACE REINFORCED CONCRETE BASE				
DWG. NO.	REVISIONS	DATE	REVISIONS	DATE
S-21		3-1-87	ABB	2-9-05
	RRH	3-30-00		

CITY OF RALEIGH - PLANS AUTHORIZED FOR CONSTRUCTION

Electronic Approval: This approval is being issued electronically. This approval is valid only upon the signature of a City of Raleigh Review Officer below. The City will retain a copy of the approved plans. Any work authorized by this approval must proceed in accordance with the plans kept on file with the City. This electronic approval may not be edited once issued. Any modification to this approval once issued will invalidate this approval.

City of Raleigh Development Approval ______________________

Raleigh Water Review Officer

North Carolina 811
www.nc811.org
*** 3 Days Before Digging ***
North Carolina 811
811 or 1-800-632-4949
Remote Ticket Entry
http://nc811.org/remoteticketentry.htm

AMERICAN Engineering
American Engineering Associates - Southeast, P.A.
4020 Westchase Boulevard, Suite 450
Raleigh, NC 27607
919-469-1101

NORTH CAROLINA AMERICAN ENGINEERING ASSOCIATES SOUTHEAST C-3881 CERTIFICATE OF AUTHORIZATION

PRELIMINARY - DO NOT USE FOR CONSTRUCTION
NORTH CAROLINA PROFESSIONAL SEAL 56528 ENGINEER JAKOB P. KLEIN
Digitally signed by Jakob Klein Date: 2024.12.02 16:11:12-05'00'

NO.	DATE	REVISION:

STIPULATION FOR REUSE

THIS DRAWING WAS PREPARED FOR USE ON THE SPECIFIC SITE, NAMED HEREON, CONTEMPORANEOUSLY WITH ITS ISSUE DATE AS LISTED, HEREON. AND IT IS NOT SUITABLE FOR USE ON A DIFFERENT PROJECT SITE OR AT A LATER TIME. USE OF THIS DRAWING FOR REFERENCE OR EXAMPLE ON ANOTHER PROJECT REQUIRES THE SERVICES OF PROPERLY LICENSED ARCHITECTS AND ENGINEERS. REPRODUCTION OF THIS DRAWING FOR REUSE ON ANOTHER PROJECT IS NOT AUTHORIZED AND MAY BE CONTRARY TO THE LAW.

THE PRESERVE AT MOODY FARM

ROLESVILLE ROAD WAKE COUNTY, NC

JOB NUMBER: 21-002
CHECKED BY: JK
DRAWN BY: RC & SM
DATE: 12/02/2024

SHEET TITLE:

UTILITY DETAILS

SHEET NO.:

CD9

Z:\Jobs\21-002 Moody Development Tract (R210002)\dwg_Working Dwgs\Construction Set\CD1 Project Details.dwg December 2, 2024

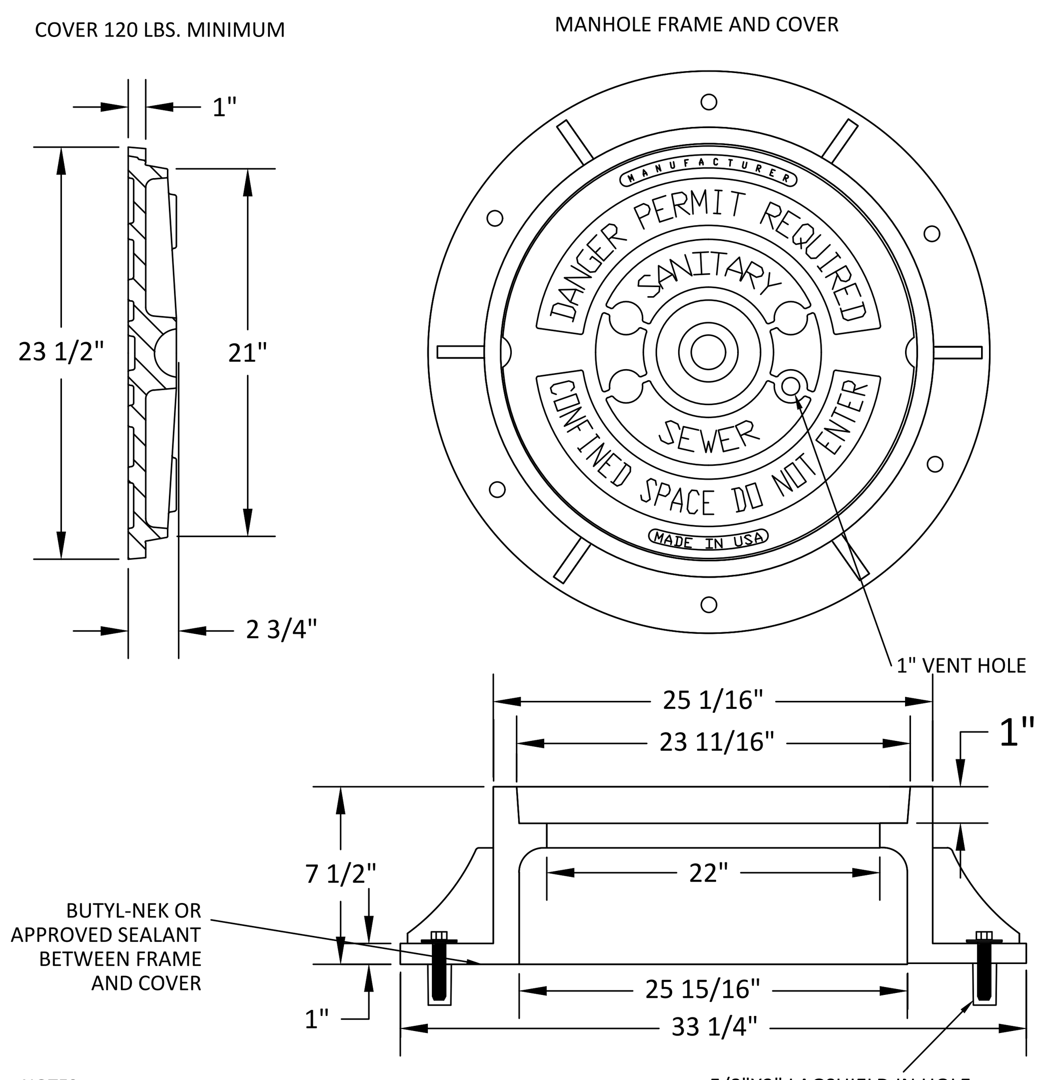

NOTES:
1) ALL MANHOLE FRAMES SHALL BE DOMESTICALLY CAST.
2) FRAME SHALL BE A MINIMUM WEIGHT OF 182 LBS. WITHIN PUBLIC ROW AND 160 LBS. WITHIN EASEMENTS.
3) COVER SHALL WEIGH A MIN. OF 120 LBS.
4) ALL MANHOLE FRAMES OUTSIDE OF PAVED SURFACES SHALL BE BOLTED TO THE CONE SECTION OR RING WITH A MINIMUM OF 4 BOLTS PER FRAME.

CITY OF RALEIGH
DEPARTMENT OF PUBLIC UTILITIES
STANDARD MANHOLE COVER

DWG. NO.	REVISIONS	DATE	REVISIONS	DATE
S-25	3-1-87	3-1-87	A.B.B.	2-9-05
	RRH	3-30-00	D.H.L.	6-18-08

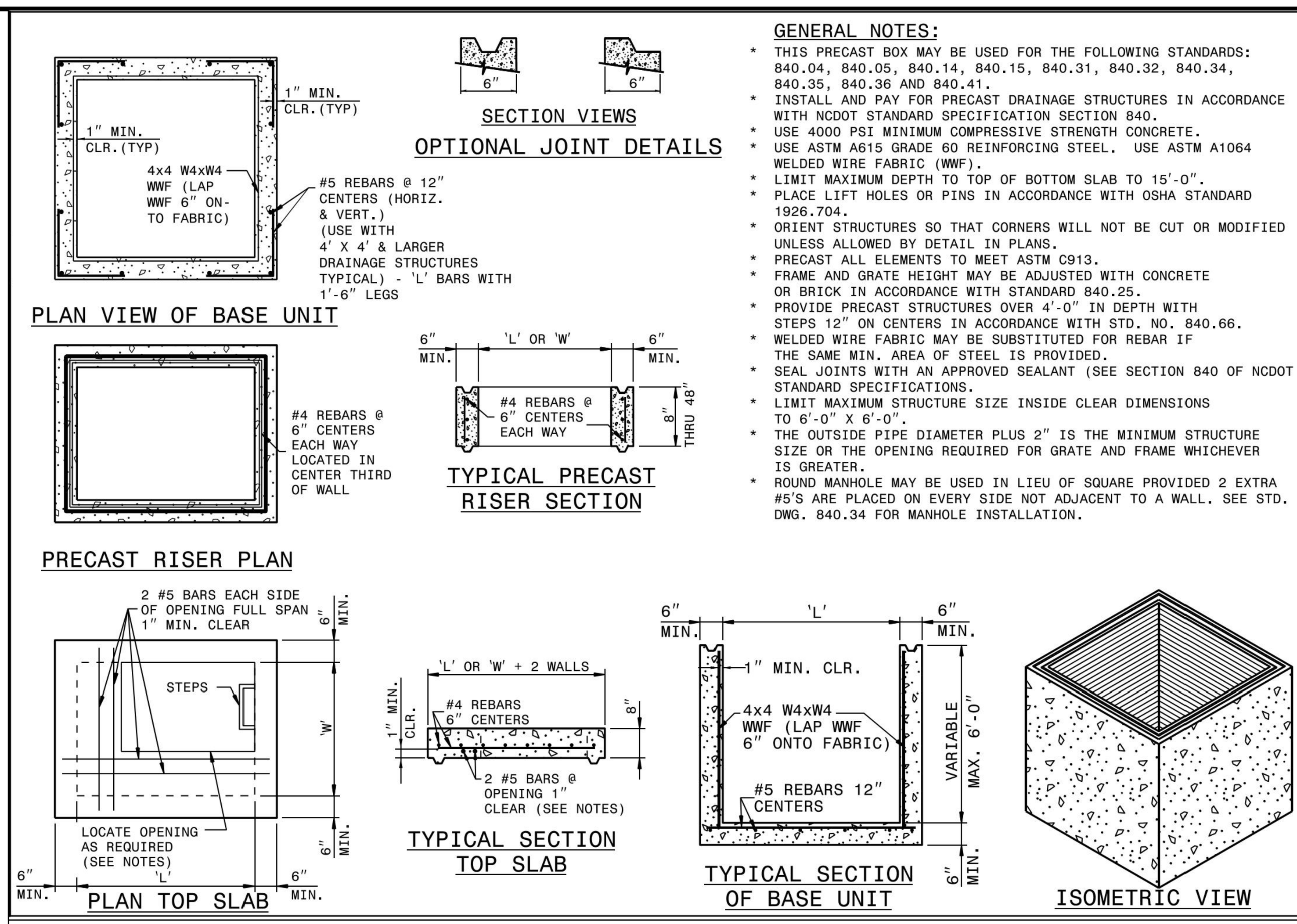

GENERAL NOTES:
- THIS PRECAST BOX MAY BE USED FOR THE FOLLOWING STANDARDS: 840.04, 840.05, 840.14, 840.15, 840.31, 840.32, 840.34, 840.35, 840.36 AND 840.41.
- INSTALL AND PAY FOR PRECAST DRAINAGE STRUCTURES IN ACCORDANCE WITH NCDOT STANDARD SPECIFICATION SECTION 840.
- USE 4000 PSI MINIMUM COMPRESSIVE STRENGTH CONCRETE.
- USE ASTM A615 GRADE 60 REINFORCING STEEL. USE ASTM A1064 WELDED WIRE FABRIC (WWF).
- LIMIT MAXIMUM DEPTH TO TOP OF BOTTOM SLAB TO 15'-0".
- PLACE LIFT HOLES OR PINS IN ACCORDANCE WITH OSHA STANDARD 1926.704.
- ORIENT STRUCTURES SO THAT CORNERS WILL NOT BE CUT OR MODIFIED UNLESS ALLOWED BY DETAIL IN PLANS.
- PRECAST ALL ELEMENTS TO MEET ASTM C913.
- FRAME AND GRATE HEIGHT MAY BE ADJUSTED WITH CONCRETE OR BRICK IN ACCORDANCE WITH STANDARD 840.25.
- PROVIDE PRECAST STRUCTURES OVER 4'-0" IN DEPTH WITH STEPS 12" ON CENTERS IN ACCORDANCE WITH STD. NO. 840.66.
- WELDED WIRE FABRIC MAY BE SUBSTITUTED FOR REBAR IF THE SAME MIN. AREA OF STEEL IS PROVIDED.
- SEAL JOINTS WITH AN APPROVED SEALANT (SEE SECTION 840 OF NCDOT STANDARD SPECIFICATIONS.
- LIMIT MAXIMUM STRUCTURE SIZE INSIDE CLEAR DIMENSIONS TO 6'-0" X 6'-0".
- THE OUTSIDE PIPE DIAMETER PLUS 2" IS THE MINIMUM STRUCTURE SIZE OR THE OPENING REQUIRED FOR GRATE AND FRAME WHICHEVER IS GREATER.
- ROUND MANHOLE MAY BE USED IN LIEU OF SQUARE PROVIDED 2 EXTRA #5'S ARE PLACED ON EVERY SIDE NOT ADJACENT TO A WALL. SEE STD. DWG. 840.34 FOR MANHOLE INSTALLATION.

STATE OF NORTH CAROLINA
DEPT. OF TRANSPORTATION
DIVISION OF HIGHWAYS
RALEIGH, N.C.
1-18
ROADWAY STANDARD DRAWING FOR
TRAFFIC BEARING PRECAST DRAINAGE STRUCTURE
SHEET 1 OF 1
840.46

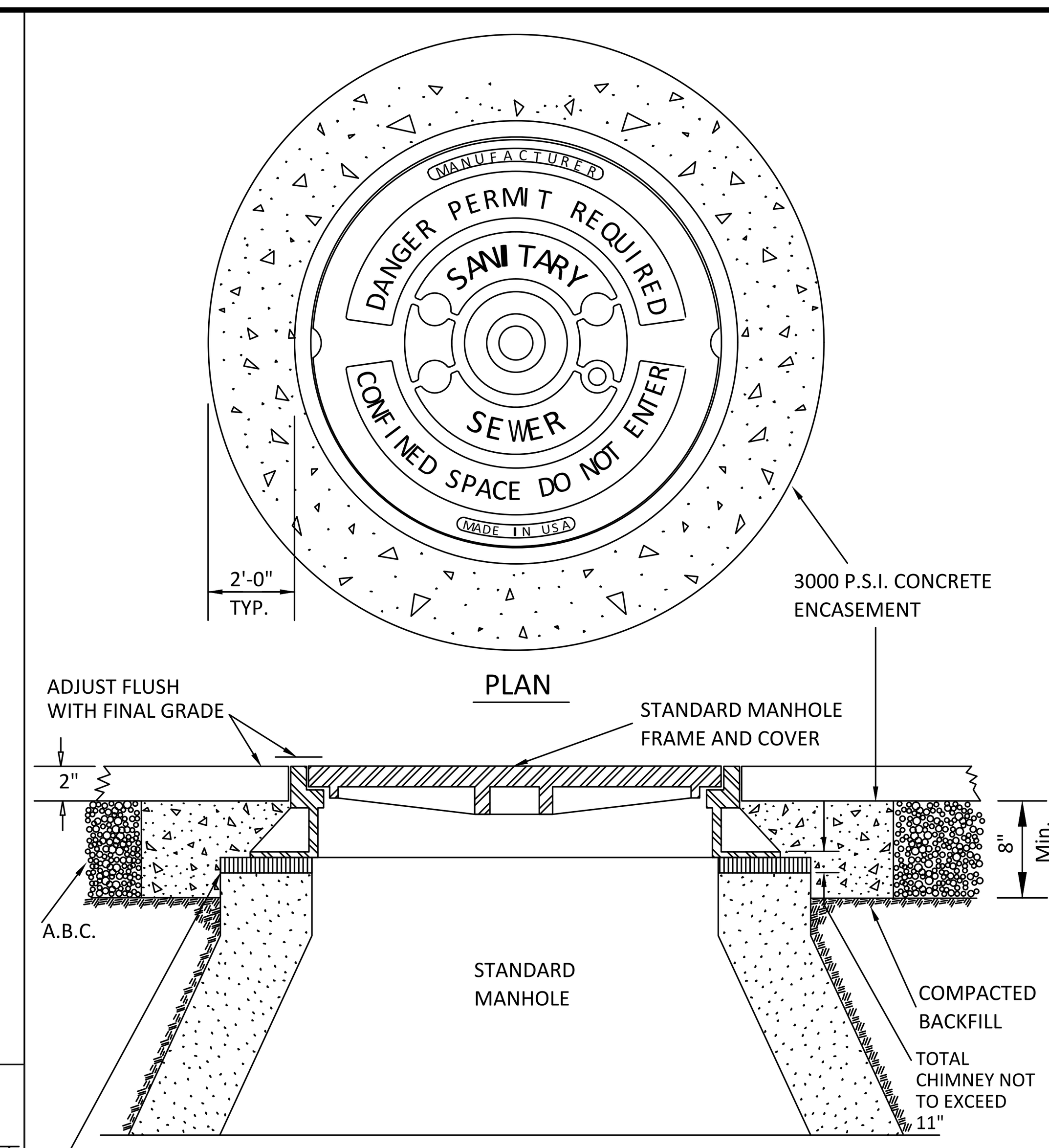

CITY OF RALEIGH
DEPARTMENT OF PUBLIC UTILITIES
STANDARD MANHOLE FRAME AND COVER DETAIL WITHIN PAVED SURFACES

DWG. NO.	REVISIONS	DATE	REVISIONS	DATE
S-29	Y.C.A.	12-31-91	ABB	9-20-04
	RRH	3-30-00	DHL	11-29-07

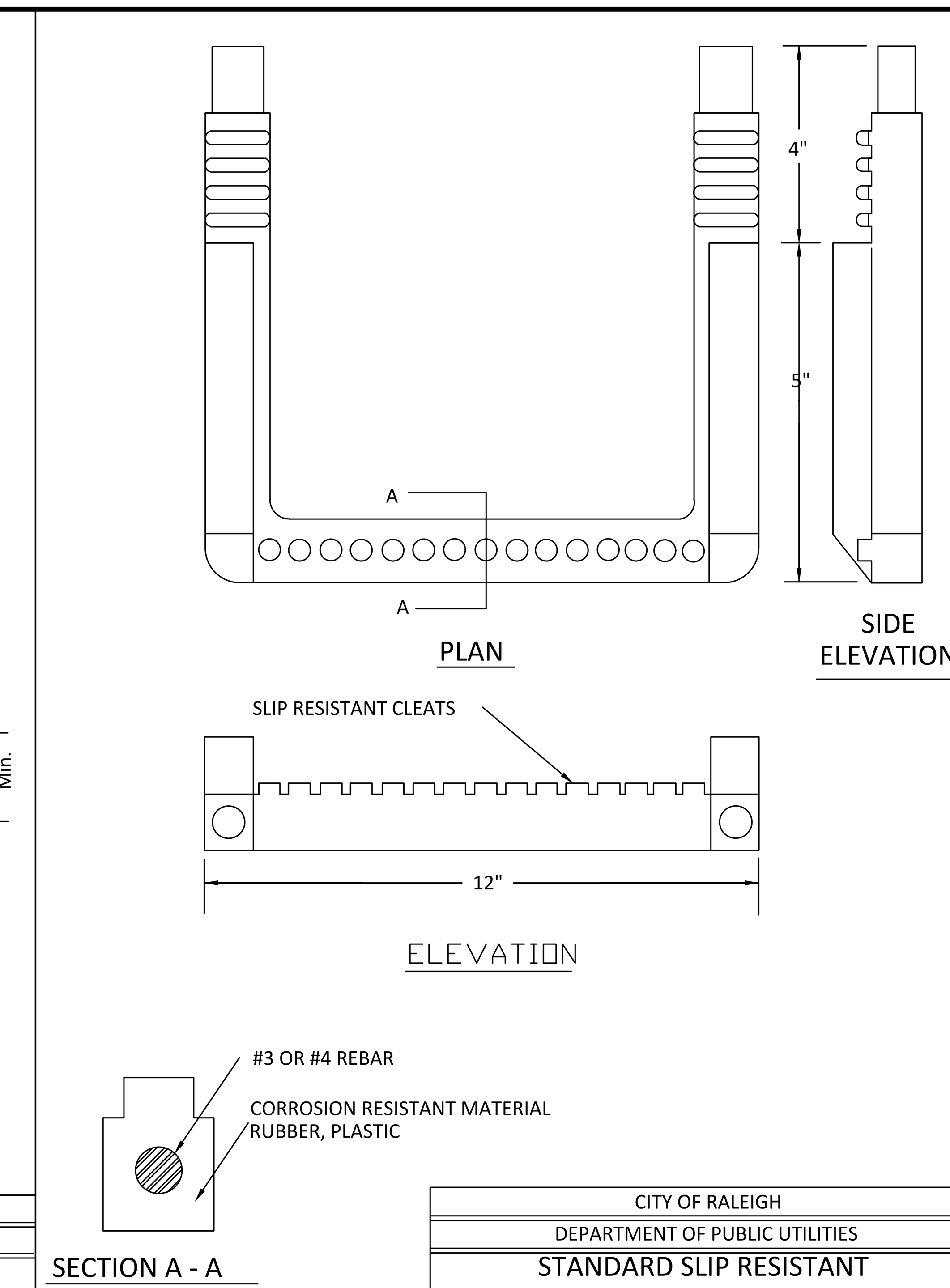

CITY OF RALEIGH
DEPARTMENT OF PUBLIC UTILITIES
STANDARD SLIP RESISTANT MANHOLE STEP DETAIL

DWG. NO.	REVISIONS	DATE	REVISIONS	DATE
S-28	RRH	3-30-00		

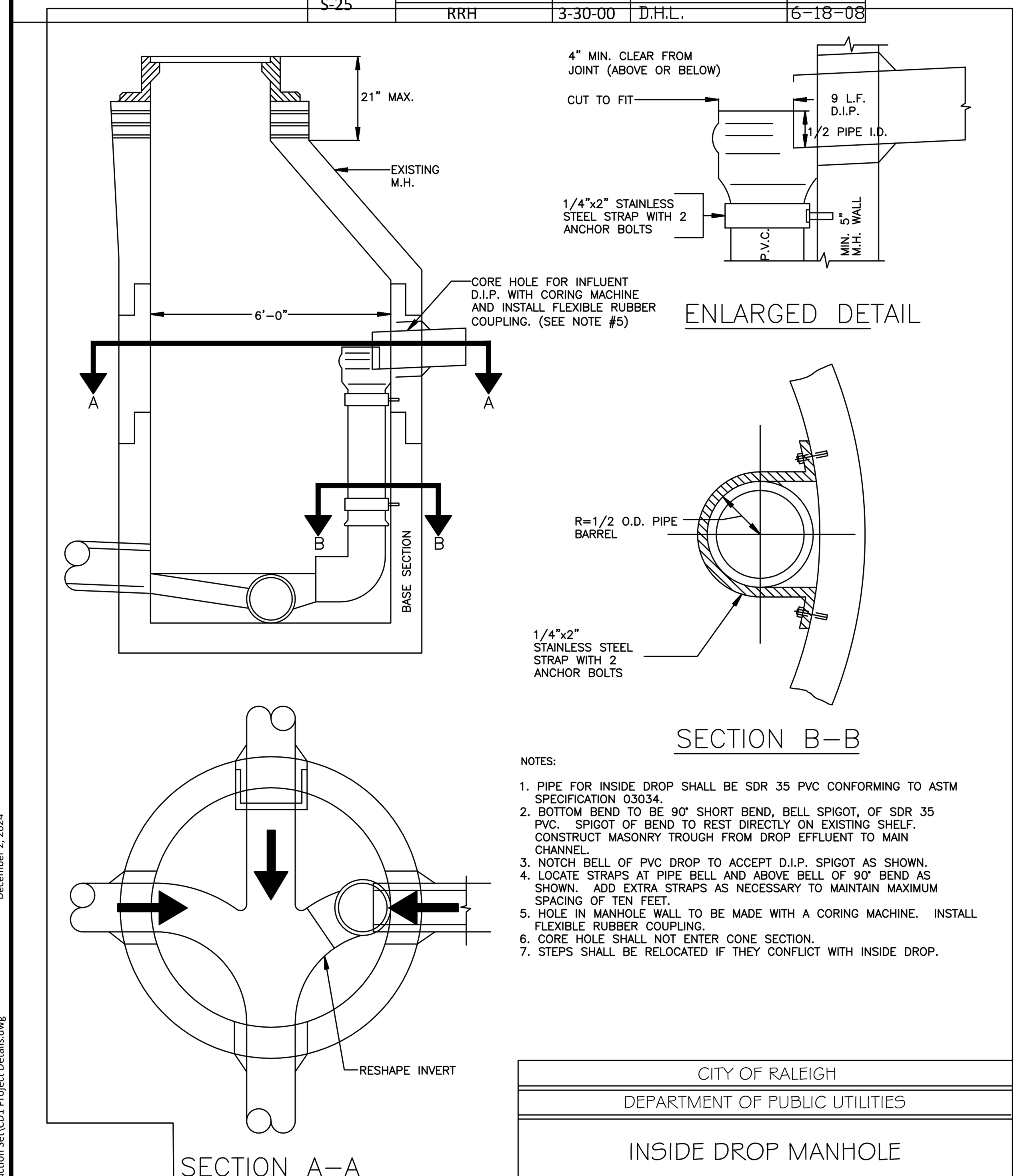

NOTES:
1. PIPE FOR INSIDE DROP SHALL BE SDR 35 PVC CONFORMING TO ASTM SPECIFICATION 03034.
2. BOTTOM BEND TO BE 90° SHORT BEND, BELL SPIGOT, OF SDR 35 PVC. SPIGOT OF BEND TO REST DIRECTLY ON EXISTING SHELF. CONSTRUCT MASONRY TROUGH FROM DROP EFFLUENT TO MAIN CHANNEL.
3. NOTCH BELL OF PVC DROP TO ACCEPT D.I.P. SPIGOT AS SHOWN.
4. LOCATE STRAPS AT PIPE BELL AND ABOVE BELL OF 90° BEND AS SHOWN. ADD EXTRA STRAPS AS NECESSARY TO MAINTAIN MAXIMUM SPACING OF TEN FEET.
5. HOLE IN MANHOLE WALL TO BE MADE WITH A CORING MACHINE. INSTALL FLEXIBLE RUBBER COUPLING.
6. CORE HOLE SHALL NOT ENTER CONE SECTION.
7. STEPS SHALL BE RELOCATED IF THEY CONFLICT WITH INSIDE DROP.

CITY OF RALEIGH
DEPARTMENT OF PUBLIC UTILITIES
INSIDE DROP MANHOLE

DWG. NO.	REVISIONS	DATE	REVISIONS	DATE
S-53	MAB	11-6-13		

NOTE: NO ENCASEMENT REQUIRED FOR SPACE GREATER THAN 24" FOR SEWER LINES

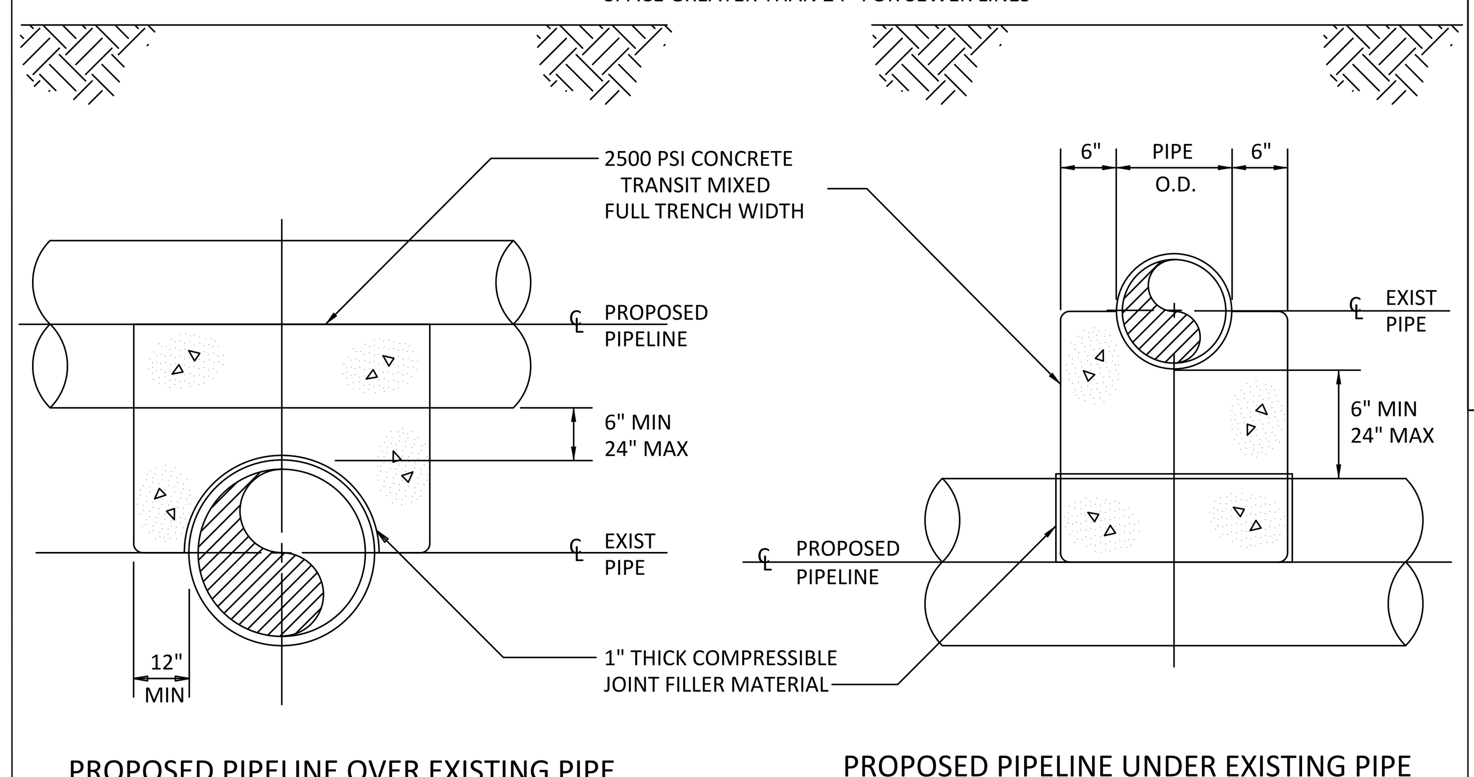

PROPOSED PIPELINE OVER EXISTING PIPE

PROPOSED PIPELINE UNDER EXISTING PIPE

CITY OF RALEIGH
DEPARTMENT OF PUBLIC UTILITIES
CONCRETE CRADLE PROTECTION FOR SEWER LINE CROSSINGS

DWG. NO.	REVISIONS	DATE	REVISIONS	DATE
S-49	DHL	2-20-08		

Note: solid cover required when water tight manhole specified.

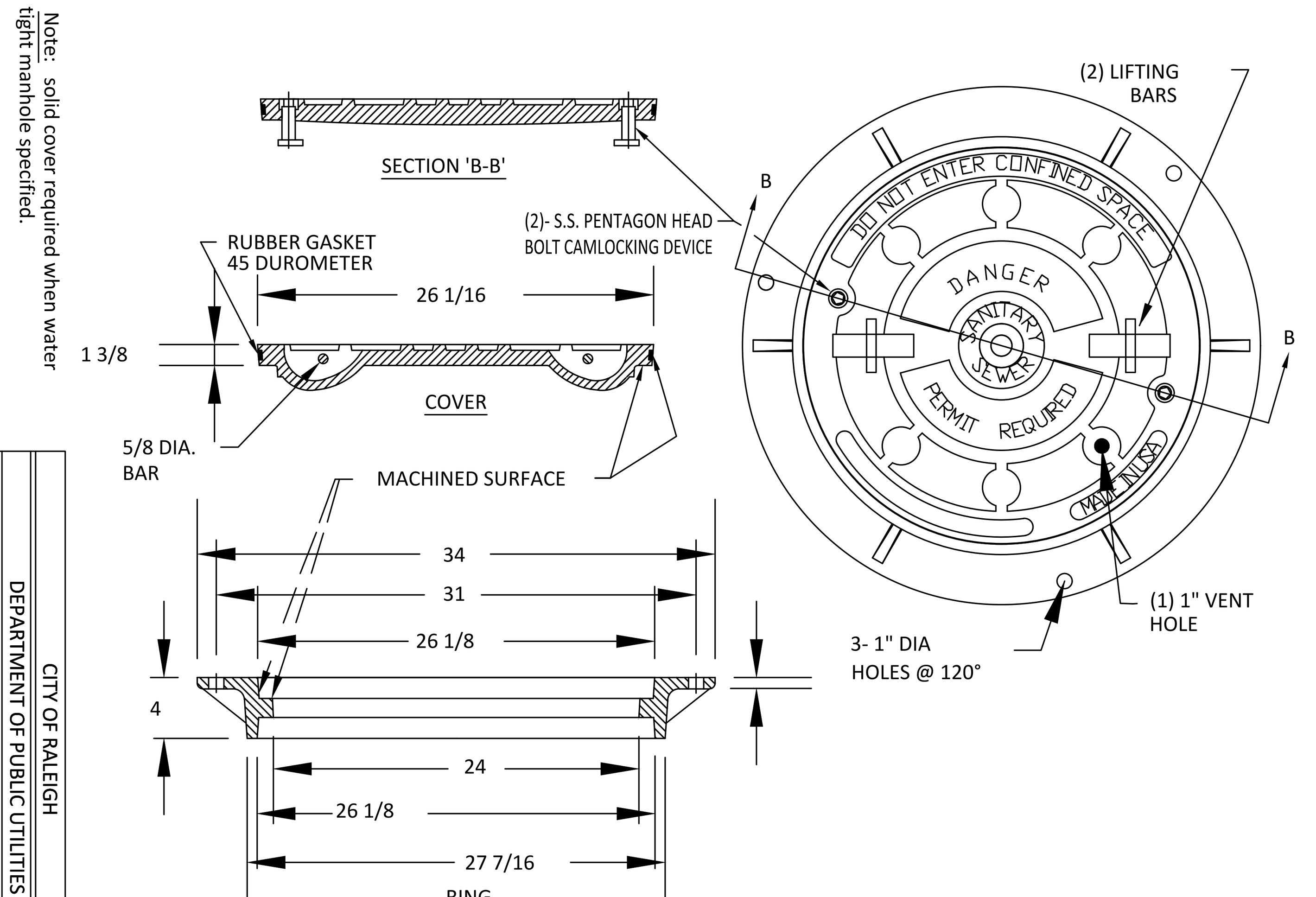

CITY OF RALEIGH
DEPARTMENT OF PUBLIC UTILITIES
FLAT TOP MANHOLE COVER

DWG. NO.	REVISIONS	DATE	REVISIONS	DATE
S-25a	3-1-87	3-1-87	A.B.B.	2-9-05
	RRH	3-30-00	D.H.L.	6-18-08

*SERVICE LATERAL MATERIAL AS REQUIRED

PAVEMENT OPTION

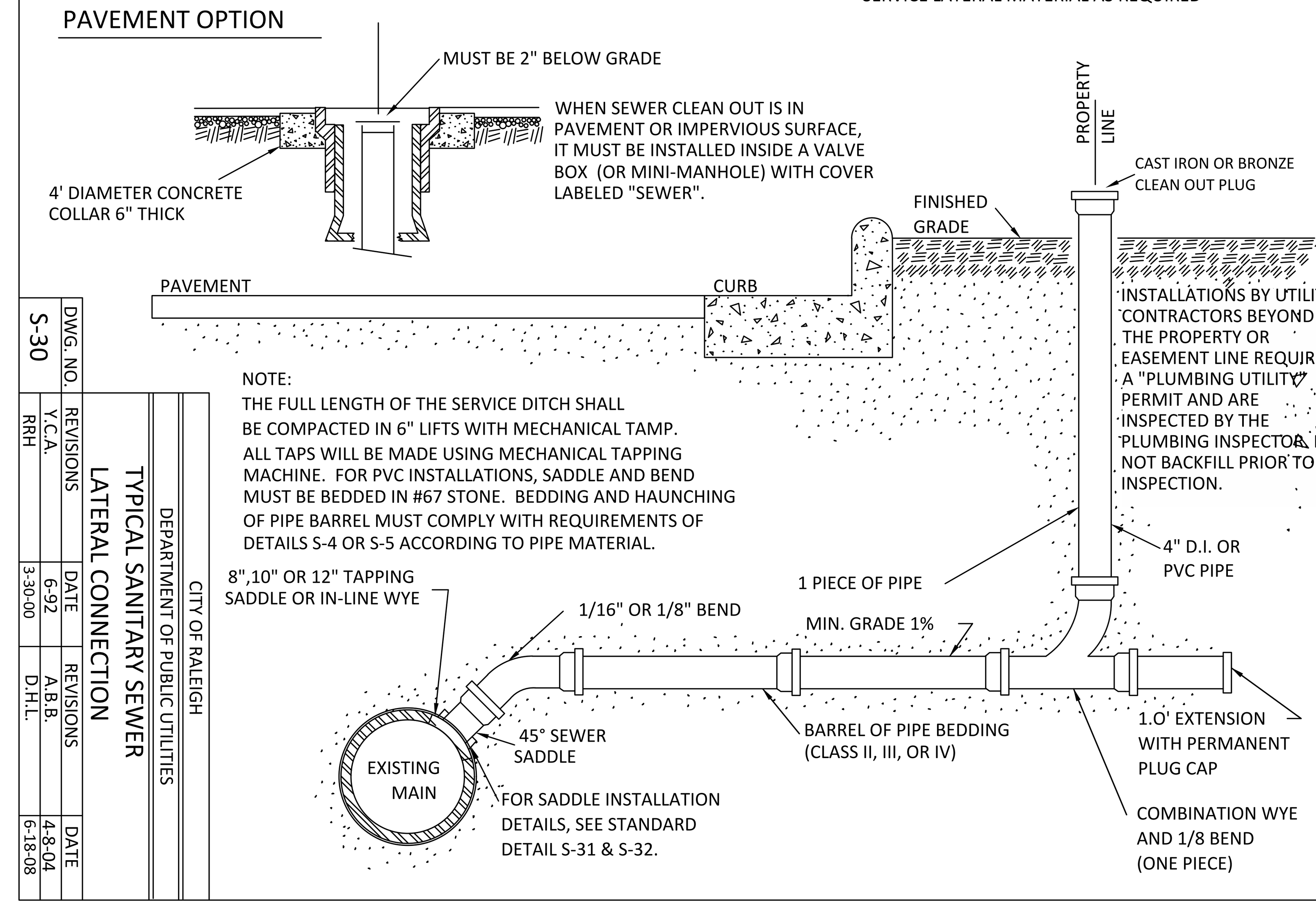

NOTE:
THE FULL LENGTH OF THE SERVICE DITCH SHALL BE COMPACTED IN 6" LIFTS WITH MECHANICAL TAMP.
ALL TAPS WILL BE MADE USING MECHANICAL TAPPING MACHINE. FOR PVC INSTALLATIONS, SADDLE AND BEND MUST BE BEDDED IN #67 STONE. BEDDING AND HAUNCHING OF PIPE BARREL MUST COMPLY WITH REQUIREMENTS OF DETAILS S-4 OR S-5 ACCORDING TO PIPE MATERIAL.

CITY OF RALEIGH
DEPARTMENT OF PUBLIC UTILITIES
TYPICAL SANITARY SEWER LATERAL CONNECTION

DWG. NO.	REVISIONS	DATE	REVISIONS	DATE
S-30	Y.C.A.	6-92	A.B.B.	4-8-04
	RRH	3-30-00	D.H.L.	6-18-08

CITY OF RALEIGH - PLANS AUTHORIZED FOR CONSTRUCTION

Electronic Approval: This approval is being issued electronically. This approval is valid only upon the signature of a City of Raleigh Review Officer below. The City will retain a copy of the approved plans. Any work authorized by this approval must proceed in accordance with the plans kept on file with the City. This electronic approval may not be edited once issued. Any modification to this approval once issued will invalidate this approval.

City of Raleigh Development Approval ______________________

Raleigh Water Review Officer

North Carolina 811
www.nc811.org
*** 3 Days Before Digging ***
North Carolina 811
811 or 1-800-632-4949
Remote Ticket Entry
http://nc811.org/remoteticketentry.htm

AMERICAN Engineering
American Engineering Associates - Southeast, P.A.
4020 Westchase Boulevard, Suite 450
Raleigh, NC 27607
919-469-1101

NORTH CAROLINA AMERICAN ENGINEERING ASSOCIATES SOUTHEAST C-3881 CERTIFICATE OF AUTHORIZATION

PRELIMINARY - DO NOT USE FOR CONSTRUCTION
NORTH CAROLINA PROFESSIONAL SEAL 56528 ENGINEER JAKOB P. KLEIN
Digitally signed by Jakob Klein Date: 2024.12.02 16:11:13 -05'00'

NO.	DATE	REVISION:

STIPULATION FOR REUSE

THIS DRAWING WAS PREPARED FOR USE ON THE SPECIFIC SITE, NAMED HEREON, CONTEMPORANEOUSLY WITH ITS ISSUE DATE AS LISTED, HEREON. AND IT IS NOT SUITABLE FOR USE ON A DIFFERENT PROJECT SITE OR AT A LATER TIME. USE OF THIS DRAWING FOR REFERENCE OR EXAMPLE ON ANOTHER PROJECT REQUIRES THE SERVICES OF PROPERLY LICENSED ARCHITECTS AND ENGINEERS. REPRODUCTION OF THIS DRAWING FOR REUSE ON ANOTHER PROJECT IS NOT AUTHORIZED AND MAY BE CONTRARY TO THE LAW.

THE PRESERVE AT MOODY FARM
ROLESVILLE ROAD
WAKE COUNTY, NC

JOB NUMBER: 21-002
CHECKED BY: JK
DRAWN BY: RC & SM
DATE: 12/02/2024

SHEET TITLE:
UTILITY DETAILS

SHEET NO.:
CD10

Z:\Jobs\21-002 Moody Development Tract (R210002)\dwg_Working Dwgs\Construction Set\CD1 Project Details.dwg December 2, 2024

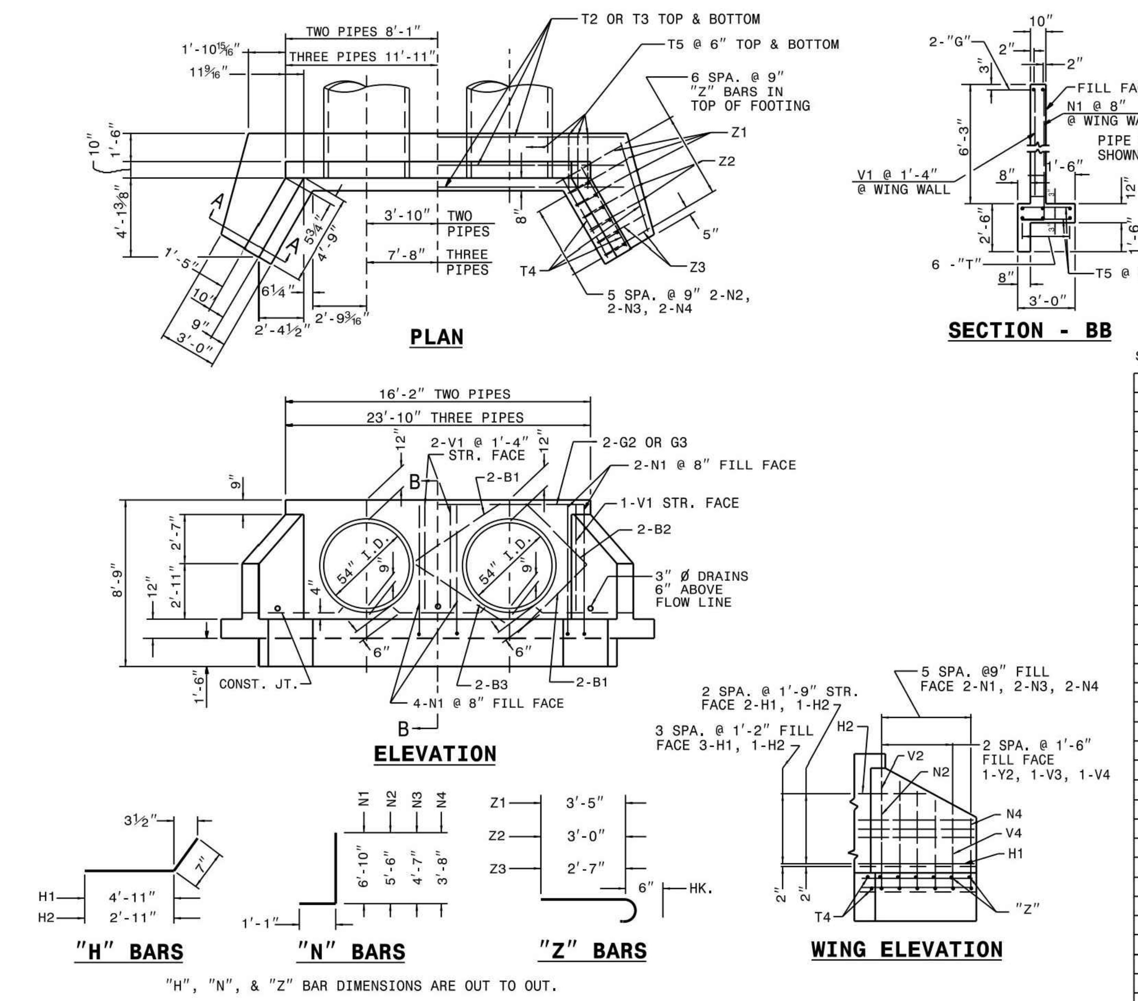

SEE STD. # 838.45 FOR GENERAL NOTES.

BILL OF MATERIAL FOR ENDWALL						
REINF. STEEL			2 PIPES		3 PIPES	
BAR	SIZE	LENGTH	NO.	WEIGHT	NO.	WEIGHT
B1	#4	5'-6"	8	29	12	44
B2	#4	4'-6"	4	12	4	12
B3	#4	6'-0"	4	16	8	32
G1	#7	8'-2"	-	-	-	-
G2	#7	15'-10"	2	65	-	-
G3	#7	23'-6"	-	-	2	96
H1	#4	5'-6"	10	37	10	37
H2	#4	3'-6"	4	9	4	9
N1	#4	7'-11"	8	42	12	63
N2	#4	6'-7"	4	18	4	18
N3	#4	5'-8"	4	15	4	15
N4	#4	4'-9"	4	13	4	13
T1	#4	11'-10"	-	-	-	-
T2	#4	19'-6"	6	78	-	-
T3	#4	27'-2"	-	-	6	109
T4	#4	5'-3"	6	21	6	21
T5	#4	2'-6"	64	107	96	160
V1	#4	5'-9"	12	46	18	69
V2	#4	4'-10"	6	19	6	19
V3	#4	3'-11"	6	16	6	16
V4	#4	3'-1"	6	12	6	12
Z1	#4	3'-11"	6	16	6	16
Z2	#4	3'-6"	4	9	4	9
Z3	#4	3'-1"	4	8	4	8
REINF. STEEL LBS.				588		778
CON./R.C. CU. YDS			6.9		8.8	

STATE OF NORTH CAROLINA DEPT. OF TRANSPORTATION DIVISION OF HIGHWAYS RALEIGH, N.C. 1-18

ROADWAY STANDARD DRAWING FOR **REINFORCED CONCRETE ENDWALL** FOR DOUBLE & TRIPLE 54" PIPE - 90° SKEW

SHEET 1 OF 2 **838.22**

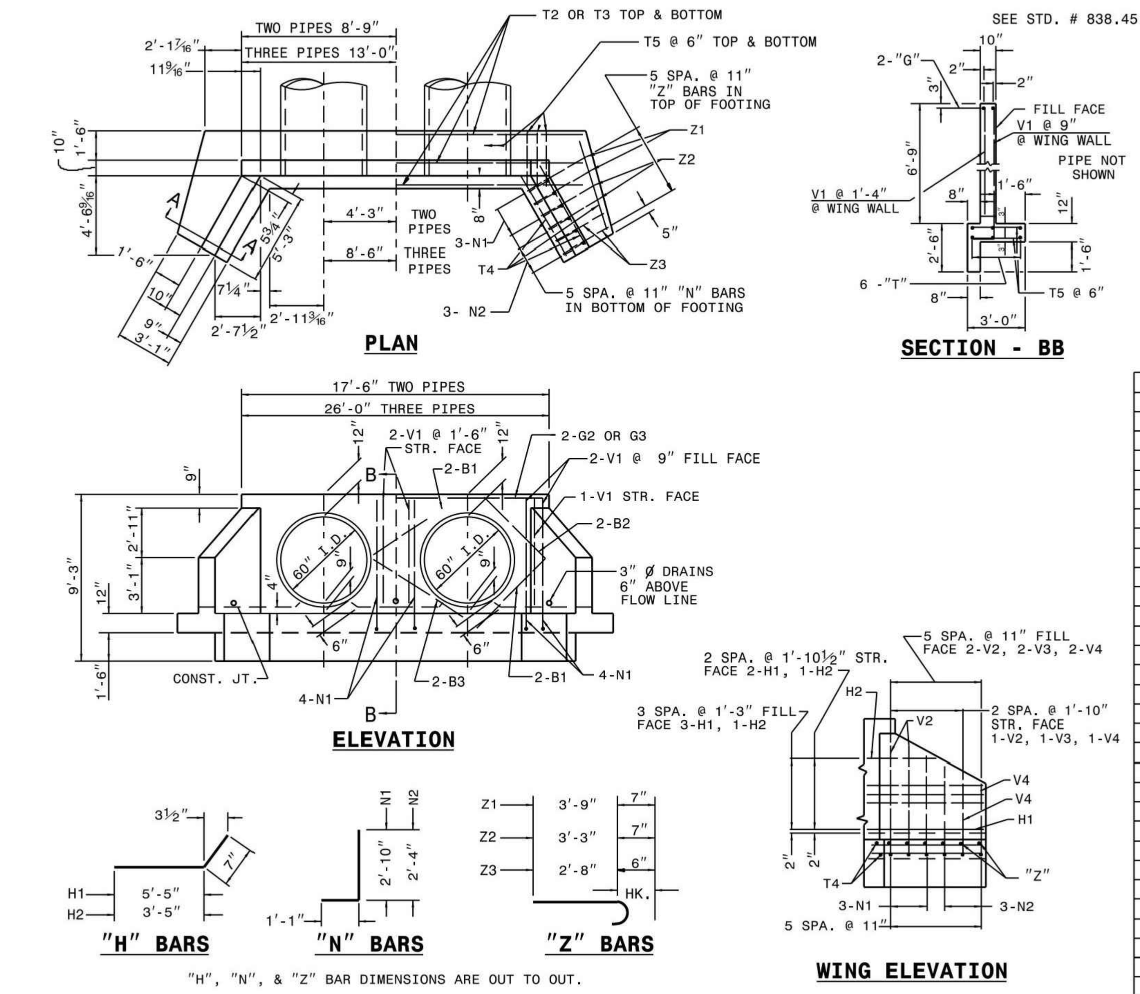

SEE STD. # 838.45 FOR GENERAL NOTES.

BILL OF MATERIAL FOR ENDWALL						
REINF. STEEL			2 PIPES		3 PIPES	
BAR	SIZE	LENGTH	NO.	WEIGHT	NO.	WEIGHT
B1	#4	5'-6"	8	29	12	44
B2	#4	4'-6"	4	12	4	12
B3	#4	6'-6"	4	17	8	35
G2	#7	17'-2"	2	70	-	-
G3	#7	25'-8"	-	-	2	105
H1	#4	6'-0"	10	40	10	40
H2	#4	4'-0"	4	11	4	11
N1	#4	3'-11"	14	57	18	74
N2	#4	3'-5"	6	14	6	14
T1	#4	21'-2"	6	85	-	-
T2	#4	29'-8"			6	119
T4	#4	5'-6"	6	22	6	22
T5	#4	2'-6"	70	117	104	174
V1	#4	6'-3"	12	50	18	75
V2	#4	5'-1"	6	20	6	20
V3	#4	3'-11"	6	16	6	16
V4	#4	2'-9"	6	11	6	11
Z1	#5	4'-4"	4	18	4	18
Z2	#4	3'-10"	4	10	4	10
Z3	#4	3'-2"	4	8	4	8
REINF. STEEL LBS.				607		808
CON./R.C. CU. YDS			7.9		9.9	

STATE OF NORTH CAROLINA DEPT. OF TRANSPORTATION DIVISION OF HIGHWAYS RALEIGH, N.C. 1-18

ROADWAY STANDARD DRAWING FOR **REINFORCED CONCRETE ENDWALL** FOR DOUBLE & TRIPLE 60" PIPE - 90° SKEW

SHEET 1 OF 2 **838.28**

GENERAL NOTES:

CHAMFER ALL CORNERS 1" OR HAVE A RADIUS OF 1".

PLACE 2 #6 "Y" BARS IN THE TOP OF ALL ENDWALL FOR PIPE CULVERTS 42" AND OVER WITH A MINIMUM OF 3" COVER AND A LENGTH OF 6" LESS THAN ENDWALL LENGTH.

CONSTRUCT BOTTOM SLAB WITH FORMS.

DO NOT INTERPRET WALL THICKNESS (T) SHOWN FOR THE THICKNESS ACCEPTABLE, BUT IS USED IN COMPUTING ENDWALL QUANTITIES.

WHEN THE CONTRACTOR ELECTS TO USE A CONSTRUCTION JOINT AT THE BOTTOM OF THE PIPE, PLACE BAR "X" DOWELS IN THE BASE AS SHOWN ON PLANS. SPACE BARS APPROXIMATELY ON 12" CENTERS UNLESS OTHERWISE DIRECTED BY THE ENGINEER.

WHEN THE CONTRACTOR ELECTS TO USE A CONSTRUCTION JOINT AT THE BOTTOM OF THE PIPE AND POUR THE BASE SEPARATELY LEAVE THE POUR ROUGH.

USE CLASS "B" CONCRETE.

STATE OF NORTH CAROLINA DEPT. OF TRANSPORTATION DIVISION OF HIGHWAYS RALEIGH, N.C. 1-18

ROADWAY STANDARD DRAWING FOR **CONCRETE ENDWALL FOR SINGLE AND DOUBLE PIPE CULVERTS** 15" THRU 48" PIPE - 90° SKEW

SHEET 3 OF 3 **838.01**

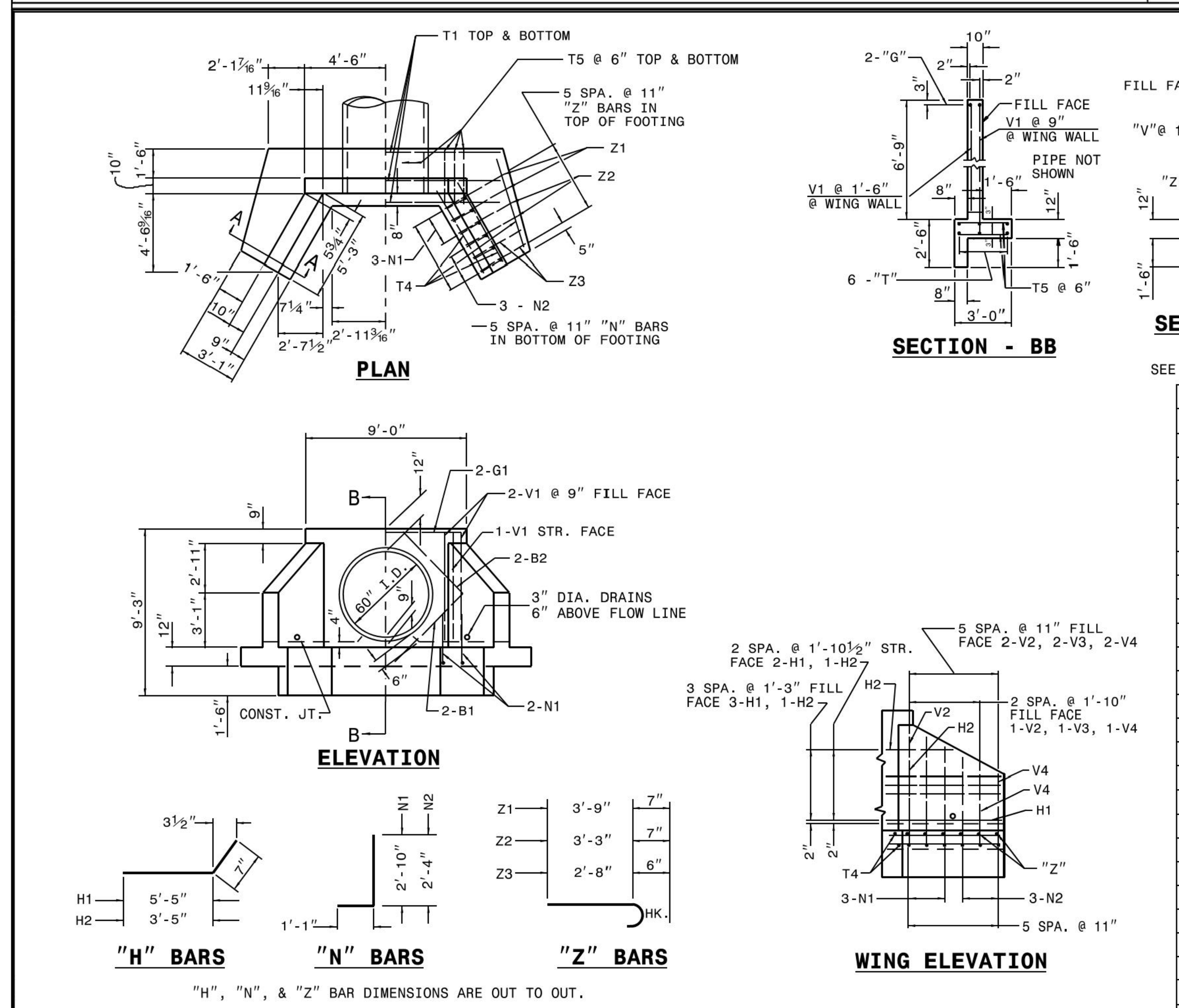

SEE STD. # 838.45 FOR GENERAL NOTES.

BILL OF MATERIAL FOR ENDWALL				
REINF. STEEL			1 PIPE	
BAR	SIZE	LENGTH	NO.	WEIGHT
B1	#4	5'-6"	4	15
B2	#4	4'-6"	4	12
G1	#7	8'-8"	2	35
H1	#4	6'-0"	10	40
H2	#4	4'-0"	4	11
N1	#5	3'-11"	10	41
N2	#4	3'-5"	6	14
T1	#4	12'-8"	6	51
T4	#4	5'-6"	6	22
T5	#4	2'-6"	36	60
V1	#4	6'-3"	6	25
V2	#4	5'-1"	6	20
V3	#4	3'-11"	6	16
V4	#4	2'-9"	6	11
Z1	#5	4'-4"	4	18
Z2	#4	3'-10"	4	10
Z3	#4	3'-2"	4	8
REINF. STEEL LBS.				409
CON./R.C. CU. YDS			5.6	

STATE OF NORTH CAROLINA DEPT. OF TRANSPORTATION DIVISION OF HIGHWAYS RALEIGH, N.C. 1-18

ROADWAY STANDARD DRAWING FOR **REINFORCED CONCRETE ENDWALL** FOR SINGLE 60" PIPE - 90° SKEW

SHEET 1 OF 2 **838.27**

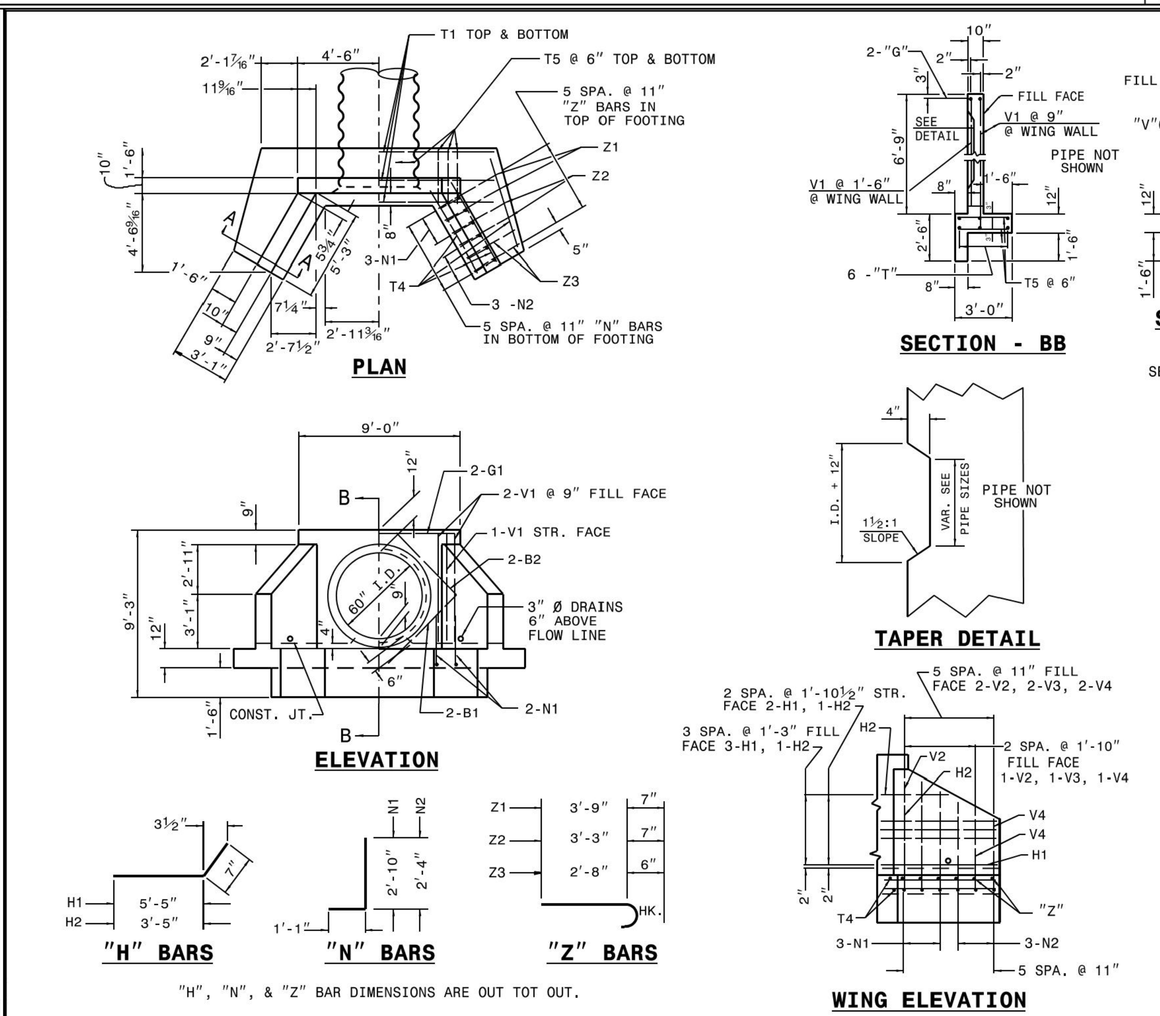

SEE STD. # 838.45 FOR GENERAL NOTES.

BILL OF MATERIAL FOR ENDWALL				
REINF. STEEL			1 PIPE	
BAR	SIZE	LENGTH	NO.	WEIGHT
B1	#4	5'-6"	4	15
B2	#4	4'-6"	4	12
G1	#7	8'-8"	2	35
H1	#4	6'-0"	10	40
H2	#4	4'-0"	4	11
N1	#5	3'-11"	10	41
N2	#4	3'-5"	6	14
T1	#4	12'-8"	6	51
T4	#4	5'-6"	6	22
T5	#4	2'-6"	36	60
V1	#4	6'-3"	6	25
V2	#4	5'-1"	6	20
V3	#4	3'-11"	6	16
V4	#4	2'-9"	6	11
Z1	#5	4'-4"	4	18
Z2	#4	3'-10"	4	10
Z3	#4	3'-2"	4	8
REINF. STEEL LBS.				409
CON./C.S. CU. YDS			5.9	

STATE OF NORTH CAROLINA DEPT. OF TRANSPORTATION DIVISION OF HIGHWAYS RALEIGH, N.C. 1-18

ROADWAY STANDARD DRAWING FOR **REINFORCED CONCRETE ENDWALL** FOR SINGLE 60" PIPE - 90° SKEW

SHEET 2 OF 2 **838.27**

GENERAL NOTES:

USE CLASS "A" CONCRETE.

CHAMFER ALL EXPOSED CORNERS 1".

ALL DIMENSIONS RELATIVE TO PLACEMENT OF REINFORCING STEEL ARE TO CENTERS OF BARS.

PLACE A STONE DRAIN CONSISTING OF ONE (1) CUBIC FOOT OF NUMBER 78M STONE CONTAINED IN A POROUS FABRIC AT EACH WEEP HOLE. PLACE SUBDRAIN FINE AGGREGATE BENEATH, AROUND AND OVER THE STONE DRAIN SO THE STONE DRAIN IS COMPLETELY COVERED BY A LAYER OF SUBDRAIN FINE AGGREGATE AT LEAST ONE (1) FOOT THICK. WHERE THERE IS MORE THAN ONE WEEP HOLE IN A WING WALL, PLACE A HORIZONTAL DRAIN OF SUBDRAIN FINE AGGREGATE AT LEAST ONE (1) FOOT SQUARE IN CROSS SECTION TO CONNECT ALL STONE DRAINS. PLACE A VERTICAL DRAIN OF SUBDRAIN FINE AGGREGATE AT LEAST ONE (1) FOOT SQUARE IN CROSS SECTION AT EACH WEEP HOLE TO AN ELEVATION OF TWO (2) FEET BELOW THE SURFACE OF THE EMBANKMENT.

STATE OF NORTH CAROLINA DEPT. OF TRANSPORTATION DIVISION OF HIGHWAYS RALEIGH, N.C. 1-18

ROADWAY STANDARD DRAWING FOR **NOTES FOR REINFORCED CONCRETE ENDWALL** STANDARD DRAWINGS 838.21 THRU 838.40

SHEET 1 OF 1 **838.45**

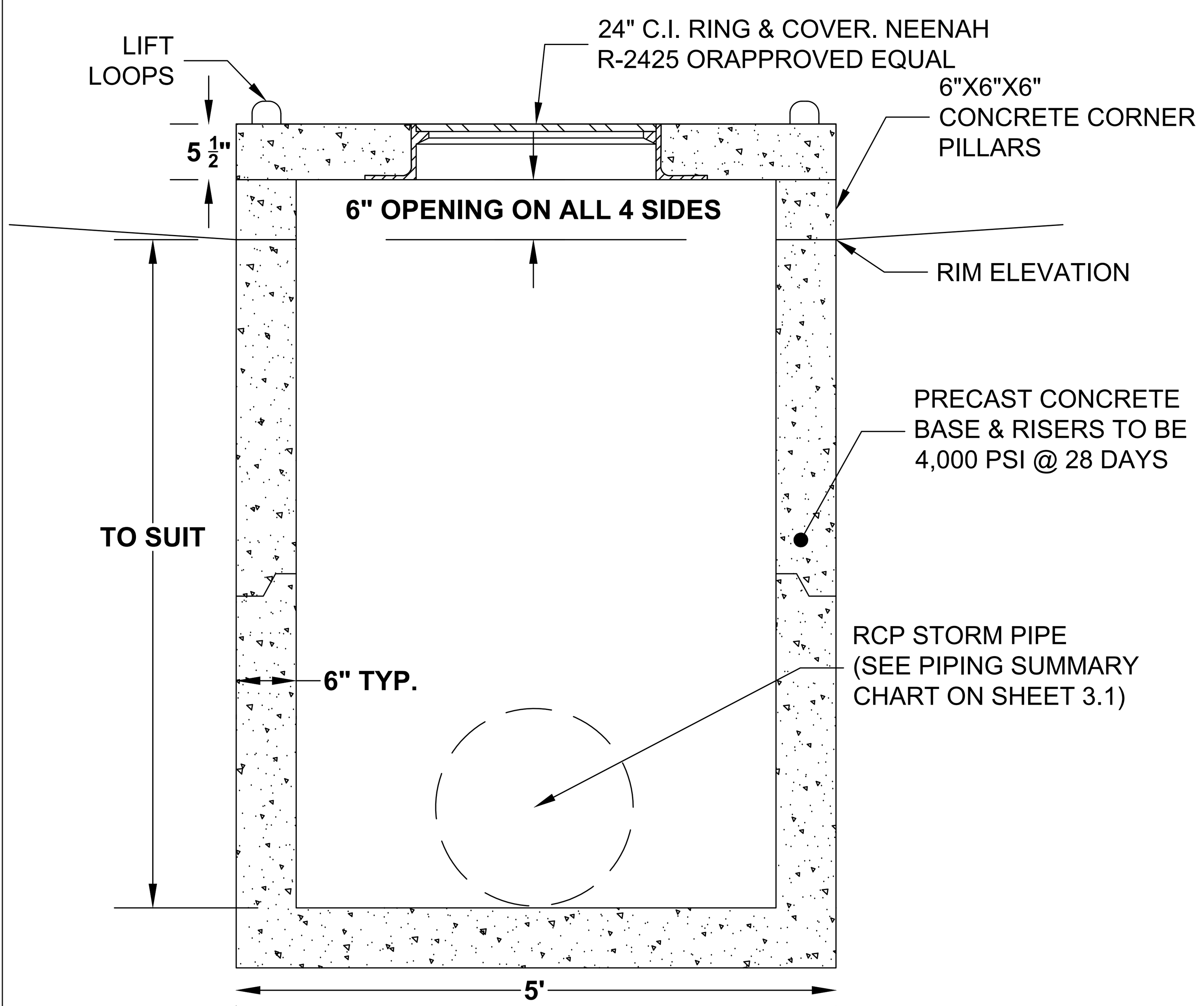

4' X 4' YARD INLET

SCALE: 1" = 1'

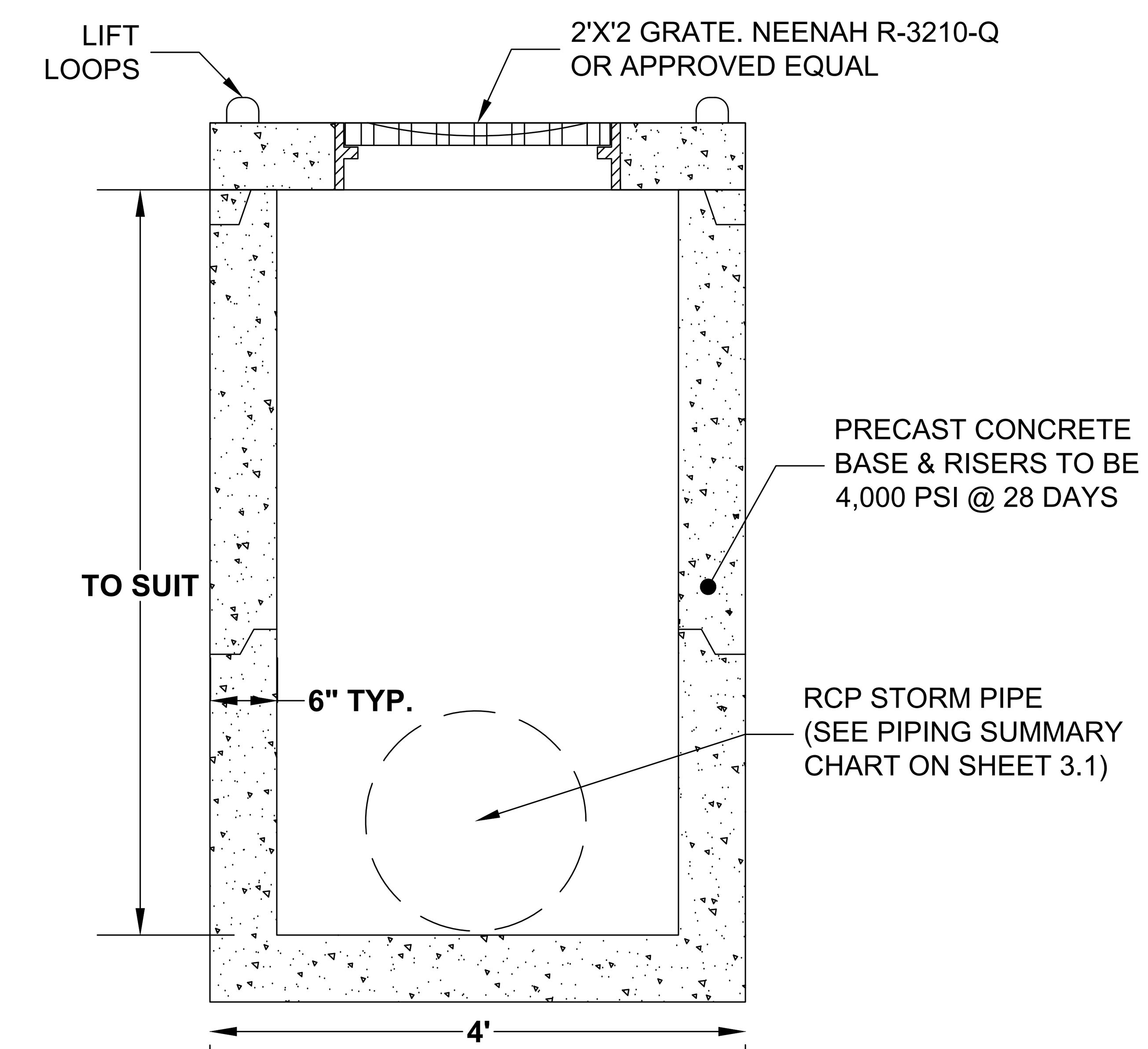

3' X 3' DROP INLET

SCALE: 1" = 1'

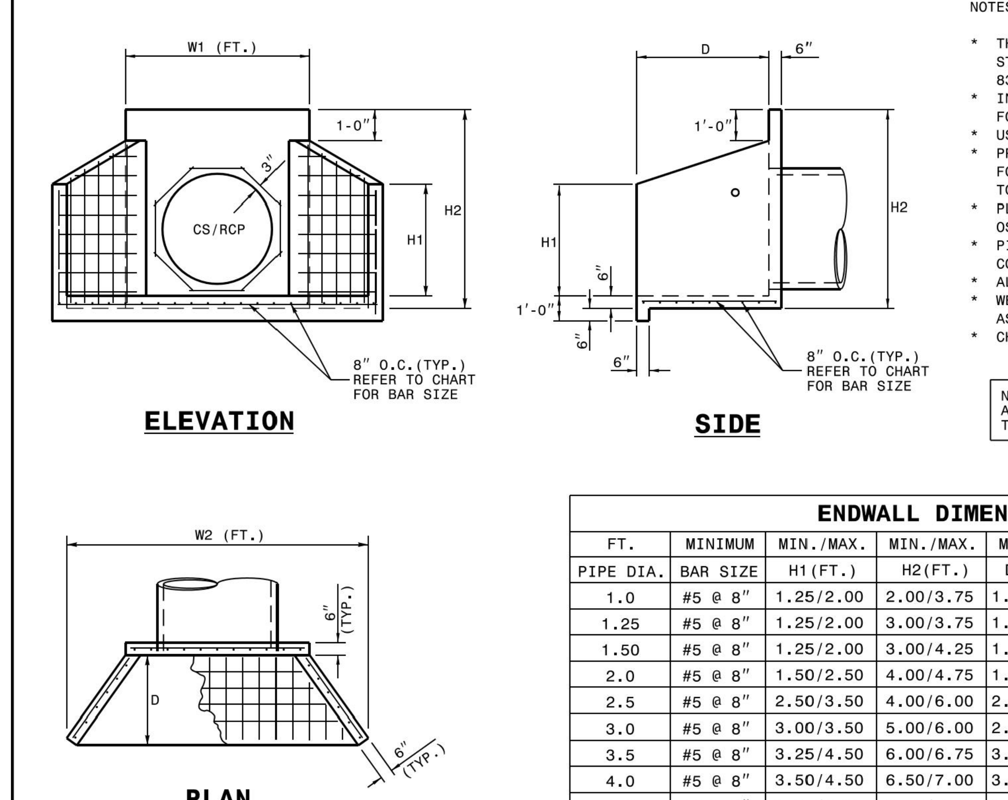

NOTES:

- * THIS PRECAST ENDWALL MAY BE USED FOR THE FOLLOWING STANDARDS: 838.01, 838.11, 838.21, 838.27, 838.33, 838.39, 838.51, 838.57, 838.63 AND 838.69.
- * INSTALL PRECAST ENDWALLS WITH WINGS AND PAY FOR IN ACCORDANCE WITH SPECIFICATION SECTION 838.
- * USE 4000 PSI CONCRETE.
- * PROVIDE ALL REINFORCING STEEL WHICH MEETS ASTM A615 FOR GRADE 60 AND WELDED WIRE FABRIC CONFORMING TO ASTM A185 WITH 2" MIN. CLEARANCE.
- * PLACE LIFT HOLES OR PINS IN ACCORDANCE WITH OSHA STANDARD 1926.704.
- * PIPE TO BE GROUTED INTO HEADWALL AT JOB SITE BY CONTRACTOR
- * ALL ELEMENTS PRECAST TO MEET ASTM C913.
- * WELDED WIRE FABRIC MAY BE SUBSTITUTED FOR REBAR AS LONG AS THE SAME AREA OF STEEL IS PROVIDED.
- * CHAMFER ALL CORNERS 1" OR HAVE A RADIUS OF 1".

NOTE: THE MINIMUM BAR SIZE SHALL BE #5 BARS AT 8" CTS.THE CONTRACTOR WILL HAVE THE OPTION TO INCREASE THIS BAR SIZE AS NEEDED.

ENDWALL DIMENSIONS

FT. PIPE DIA.	MINIMUM BAR SIZE	MIN./MAX. H1(FT.)	MIN./MAX. H2(FT.)	MIN./MAX. D (FT.)	MIN./MAX. W1	MIN./MAX. W2
1.0	#5 @ 8"	1.25/2.00	2.00/3.75	1.25/1.75	3.00/3.75	5.50/6.00
1.25	#5 @ 8"	1.25/2.00	3.00/3.75	1.25/2.00	3.50/3.75	6.50/6.75
1.50	#5 @ 8"	1.25/2.00	3.00/4.25	1.50/2.50	3.50/3.75	6.50/6.75
2.0	#5 @ 8"	1.50/2.50	4.00/4.75	1.75/2.50	4.00/4.25	7.50/8.25
2.5	#5 @ 8"	2.50/3.50	4.00/6.00	2.00/3.00	4.50/5.50	10.00/11.50
3.0	#5 @ 8"	3.00/3.50	5.00/6.00	2.75/3.50	5.25/5.75	11.50/11.75
3.5	#5 @ 8"	3.25/4.50	6.00/6.75	3.25/3.50	6.00/6.75	12.00/13.25
4.0	#5 @ 8"	3.50/4.50	6.50/7.00	3.25/3.50	6.50/6.75	13.00/13.25
4.5	#5 @ 8"	4.00/5.00	6.50/8.50	3.25/4.00	7.00/9.25	13.50/15.75
5.0	#5 @ 8"	4.50/5.00	7.00/8.50	3.25/4.00	7.25/9.25	13.75/15.75
5.5	#5 @ 8"	4.50/5.00	7.50/8.50	3.25/4.00	7.25/9.25	14.00/15.75
6.0	#5 @ 8"	4.50/5.00	7.50/8.50	3.25/4.00	7.75/9.25	14.75/16.75

STATE OF NORTH CAROLINA DEPT. OF TRANSPORTATION DIVISION OF HIGHWAYS RALEIGH, N.C. 1-18

ROADWAY STANDARD DRAWING FOR **PRECAST CONCRETE ENDWALL** FOR SINGLE 12" THRU 72" PIPE - 90° SKEW

SHEET 1 OF 1 **838.80**

CITY OF RALEIGH - PLANS AUTHORIZED FOR CONSTRUCTION

Electronic Approval: This approval is being issued electronically. This approval is valid only upon the signature of a City of Raleigh Review Officer below. The City will retain a copy of the approved plans. Any work authorized by this approval must proceed in accordance with the plans kept on file with the City. This electronic approval may not be edited once issued. Any modification to this approval once issued will invalidate this approval.

City of Raleigh Development Approval ______________________

Raleigh Water Review Officer

North Carolina 811 www.nc811.org

*** 3 Days Before Digging ***
North Carolina 811
811 or 1-800-632-4949
Remote Ticket Entry
http://nc811.org/remoteticketentry.htm

AMERICAN Engineering
American Engineering Associates - Southeast, P.A.
4020 Westchase Boulevard, Suite 450
Raleigh, NC 27607
919-469-1101

NORTH CAROLINA AMERICAN ENGINEERING ASSOCIATES SOUTHEAST C-3881 CERTIFICATE OF AUTHORIZATION

PRELIMINARY - DO NOT USE FOR CONSTRUCTION

NORTH CAROLINA PROFESSIONAL SEAL 56528 ENGINEER JAKOB P. KLEIN

Digitally signed by Jakob Klein Date: 2024.12.02 16:11:14-05'00'

NO.	DATE	REVISION:

STIPULATION FOR REUSE

THIS DRAWING WAS PREPARED FOR USE ON THE SPECIFIC SITE, NAMED HEREON, CONTEMPORANEOUSLY WITH ITS ISSUE DATE AS LISTED, HEREON. AND IT IS NOT SUITABLE FOR USE ON A DIFFERENT PROJECT SITE OR AT A LATER TIME. USE OF THIS DRAWING FOR REFERENCE OR EXAMPLE ON ANOTHER PROJECT REQUIRES THE SERVICES OF PROPERLY LICENSED ARCHITECTS AND ENGINEERS. REPRODUCTION OF THIS DRAWING FOR REUSE ON ANOTHER PROJECT IS NOT AUTHORIZED AND MAY BE CONTRARY TO THE LAW.

THE PRESERVE AT MOODY FARM

ROLESVILLE ROAD WAKE COUNTY, NC

JOB NUMBER: 21-002
CHECKED BY: JK
DRAWN BY: RC & SM
DATE: 12/02/2024

SHEET TITLE:

DRAINAGE DETAILS

SHEET NO.:

CD11

Z:\Jobs\21-002 Moody Development Tract (R210002)\dwg_Working Dwgs\Construction Set\CD1 Project Details.dwg December 2, 2024

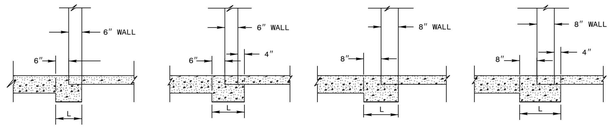

PART SECTION 6" WALL | PART SECTION 6" WALL WITH 4" LIP | PART SECTION 8" WALL | PART SECTION 8" WALL WITH 4" LIP

PART SECTION OF END ELEVATION

TABLES OF QUANTITIES FOR PIPE SET IN PAD						
PIPE	"W"	"W1"	"T"	C.Y. QUANTITIES WHEN L IS		
D	DIM	DIM	DIM	12"	16"	20"
12"	1'-1 7/8"	0'-7 7/8"	0'-2"	0.005	0.007	0.008
15"	1'-3 5/8"	0'-9 1/8"	0'-2"	0.006	0.008	0.010
18"	1'-5 1/4"	0'-10 3/8"	0'-2"	0.007	0.010	0.012
24"	1'-8 3/4"	1'-0 1/8"	0'-3"	0.011	0.014	0.018
30"	2'-0 1/4"	1'-2 3/4"	0'-3 1/2"	0.014	0.018	0.023
36"	2'-3 3/4"	1'-5 3/8"	0'-4"	0.017	0.023	0.025
42"	2'-7 1/8"	1'-7"	0'-5 1/4"	0.025	0.030	0.038
48"	2'-10 5/8"	1'-8 3/4"	0'-5 3/4"	0.028	0.038	0.047
54"	3'-2 1/8"	1'-10 1/2"	0'-6 1/4"	0.035	0.047	0.058
60"	3'-5 3/8"	2'-0 1/4"	0'-6 3/4"	0.042	0.056	0.071
66"	3'-9"	2'-2 1/4"	0'-7 1/4"	0.050	0.067	0.084
72"	4'-0 1/2"	2'-3 3/4"	0'-7 3/4"	0.059	0.078	0.098

GENERAL NOTES:
USE THIS STANDARD WITH ALL DRAINAGE STRUCTURES USING REINFORCED CONCRETE PIPE SET IN BASE SLAB.

STATE OF NORTH CAROLINA DEPT. OF TRANSPORTATION DIVISION OF HIGHWAYS RALEIGH, N.C.

1-18

ROADWAY STANDARD DRAWING FOR
CONCRETE BASE PAD FOR DRAINAGE STRUCTURES

SHEET 1 OF 1
840.00

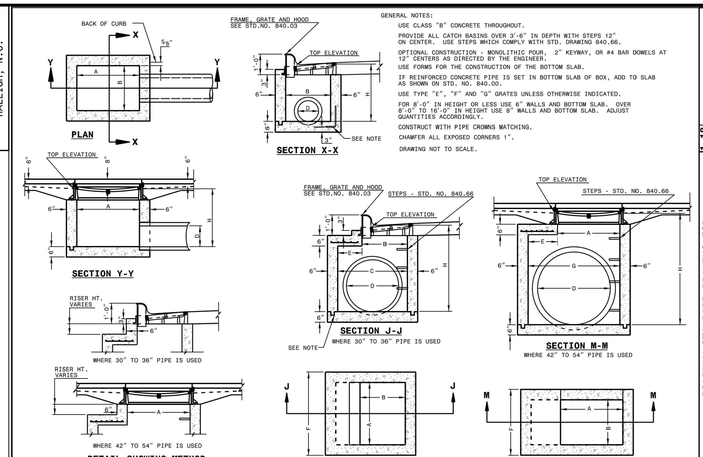

GENERAL NOTES:
USE CLASS "B" CONCRETE THROUGHOUT.
PROVIDE ALL CATCH BASINS OVER 3'-6" IN DEPTH WITH STEPS 12" ON CENTER. USE STEPS WHICH COMPLY WITH STD. DRAWING 840.66.
OPTIONAL CONSTRUCTION - MONOLITHIC POUR. 2" KEYWAY, OR #4 BAR DOWELS AT 12" CENTERS AS DIRECTED BY THE ENGINEER.
USE FORMS FOR THE CONSTRUCTION OF THE BOTTOM SLAB.
IF REINFORCED CONCRETE PIPE IS SET IN BOTTOM SLAB OF BOX, ADD TO SLAB AS SHOWN ON STD. NO. 840.00.
USE TYPE "E", "F" AND "G" GRATES UNLESS OTHERWISE INDICATED.
FOR 8'-0" IN HEIGHT OR LESS USE 6" WALLS AND BOTTOM SLAB. OVER 8'-0" TO 16'-0" IN HEIGHT USE 8" WALLS AND BOTTOM SLAB. ADJUST QUANTITIES ACCORDINGLY.
CONSTRUCT WITH PIPE CROWNS MATCHING.
CHAMFER ALL EXPOSED CORNERS 1".
DRAWING NOT TO SCALE.

STATE OF NORTH CAROLINA DEPT. OF TRANSPORTATION DIVISION OF HIGHWAYS RALEIGH, N.C.

1-18

ROADWAY STANDARD DRAWING FOR
CONCRETE CATCH BASIN
12" THRU 54" PIPE

SHEET 1 OF 2
840.02

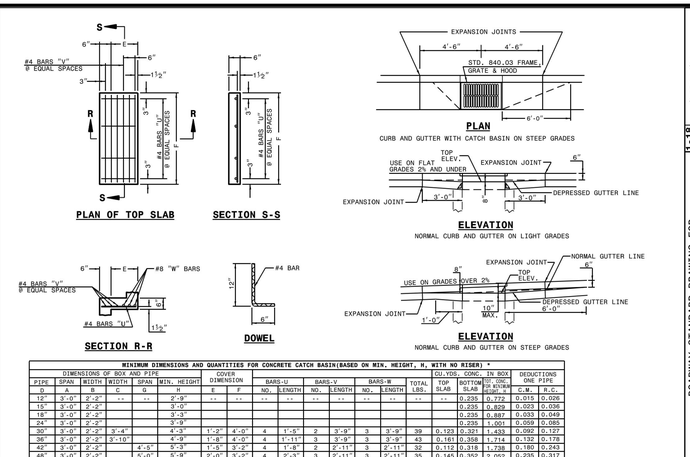

MINIMUM DIMENSIONS AND QUANTITIES FOR CONCRETE CATCH BASIN(BASED ON MIN. HEIGHT, H, WITH NO RISER) *

DIMENSIONS OF BOX AND PIPE									BARS-U		BARS-V		BARS-W		TOTAL LBS.	CU.YDS. CONC. IN BOX		DEDUCTIONS ONE PIPE	
PIPE	SPAN	WIDTH	WIDTH	SPAN	MIN. HEIGHT	COVER DIMENSION			NO.	LENGTH	NO.	LENGTH	NO.	LENGTH		TOP SLAB	BOTTOM SLAB	C.Y. WALL PER FT. OF HT.	C.Y.	R.C.
D	A	B	C	G	H	E	F												
12"	3'-0"	2'-2"	--	--	2'-9"	--	--		--	--	--	--	--	--	--	0.235	0.772	0.015	0.026
15"	3'-0"	2'-2"			3'-0"											0.235	0.829	0.033	0.036
18"	3'-0"	2'-2"			3'-3"											0.235	0.887	0.033	0.049
24"	3'-0"	2'-2"			3'-9"											0.235	1.001	0.059	0.085
30"	3'-0"	2'-2"	3'-4"		4'-3"	1'-2"	4'-0"	4	1'-5"	2	3'-9"	3	3'-9"	39	0.120	0.321	1.433	0.092	0.127
36"	3'-0"	2'-2"	3'-10"		4'-9"	1'-8"	4'-0"	4	1'-11"	3	3'-9"	3	3'-9"	43	0.161	0.358	1.714	0.132	0.178
42"	3'-0"	2'-2"		4'-5"	5'-3"	1'-5"	3'-2"	4	1'-8"	2	2'-11"	3	2'-11"	32	0.112	0.318	1.738	0.180	0.243
48"	3'-0"	2'-2"		5'-0"	5'-9"	2'-0"	3'-2"	4	2'-3"	3	2'-11"	3	2'-11"	35	0.145	0.352	2.052	0.235	0.317
54"	3'-0"	2'-2"		5'-7"	6'-3"	2'-7"	3'-2"	4	2'-10"	5	2'-11"	3	2'-11"	41	0.180	0.386	2.387	0.297	0.401

* RISER HAS .228 CUBIC YARDS OF CONCRETE PER FOOT HEIGHT

STATE OF NORTH CAROLINA DEPT. OF TRANSPORTATION DIVISION OF HIGHWAYS RALEIGH, N.C.

1-18

ROADWAY STANDARD DRAWING FOR
CONCRETE CATCH BASIN
12" THRU 54" PIPE

SHEET 2 OF 2
840.02

AMERICAN Engineering
American Engineering Associates - Southeast, P.A.
4020 Westchase Boulevard, Suite 450
Raleigh, NC 27607
919-469-1101

NORTH CAROLINA AMERICAN ENGINEERING ASSOCIATES SOUTHEAST C-3881 CERTIFICATE OF AUTHORIZATION

PRELIMINARY
NOT FOR CONSTRUCTION
Digitally signed by
DOUGLAS P. KLEE
365284
12/02/2024 10:52:02
-05'00'

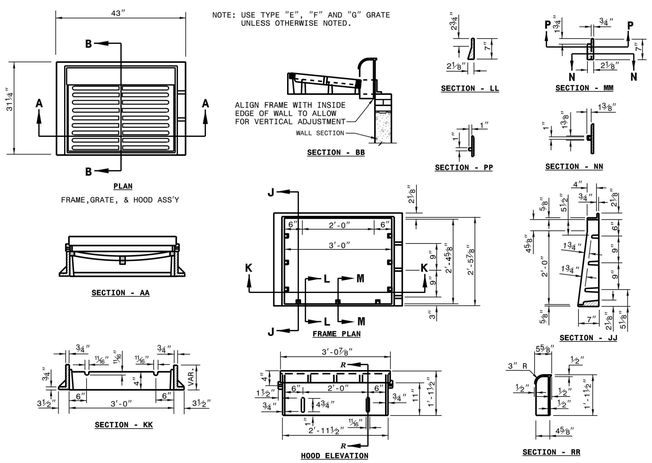

STATE OF NORTH CAROLINA DEPT. OF TRANSPORTATION DIVISION OF HIGHWAYS RALEIGH, N.C.

1-18

ROADWAY STANDARD DRAWING FOR
FRAME, GRATES, AND HOOD
FOR USE ON STANDARD CATCH BASIN

SHEET 1 OF 2
840.03

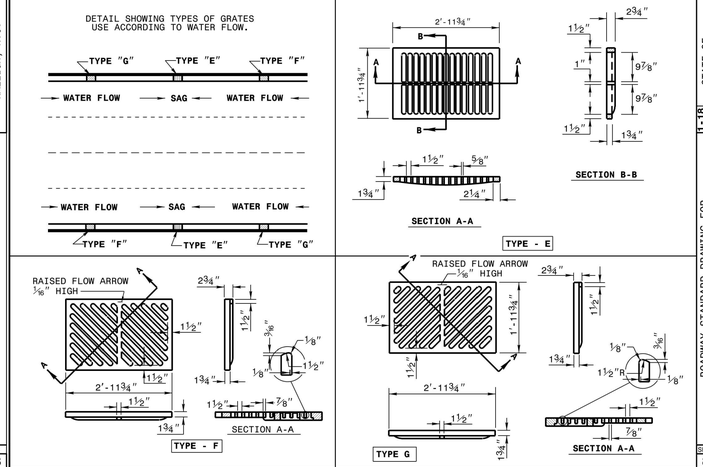

STATE OF NORTH CAROLINA DEPT. OF TRANSPORTATION DIVISION OF HIGHWAYS RALEIGH, N.C.

1-18

ROADWAY STANDARD DRAWING FOR
FRAME, GRATES, AND HOOD
FOR USE ON STANDARD CATCH BASIN

SHEET 2 OF 2
840.03

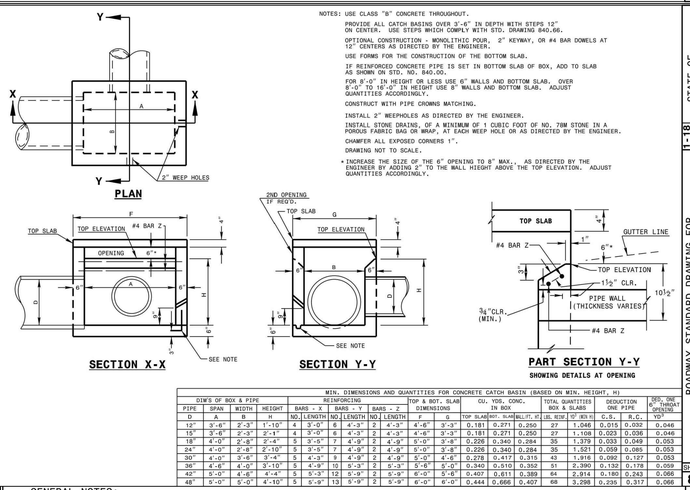

NOTES: USE CLASS "B" CONCRETE THROUGHOUT.
PROVIDE ALL CATCH BASINS OVER 3'-6" IN DEPTH WITH STEPS 12" ON CENTER. USE STEPS WHICH COMPLY WITH STD. DRAWING 840.66.
OPTIONAL CONSTRUCTION - MONOLITHIC POUR. 2" KEYWAY, OR #4 BAR DOWELS AT 12" CENTERS AS DIRECTED BY THE ENGINEER.
USE FORMS FOR THE CONSTRUCTION OF THE BOTTOM SLAB.
IF REINFORCED CONCRETE PIPE IS SET IN BOTTOM SLAB OF BOX, ADD TO SLAB AS SHOWN ON STD. NO. 840.00.
FOR 8'-0" IN HEIGHT OR LESS USE 6" WALLS AND BOTTOM SLAB. OVER 8'-0" TO 16'-0" IN HEIGHT USE 8" WALLS AND BOTTOM SLAB. ADJUST QUANTITIES ACCORDINGLY.
CONSTRUCT WITH PIPE CROWNS MATCHING.
INSTALL 2" WEEPHOLES AS DIRECTED BY THE ENGINEER.
INSTALL STONE DRAINS, OF A MINIMUM OF 1 CUBIC FOOT OF NO. 78M STONE IN A POROUS FABRIC BAG OR WRAP, AT EACH WEEP HOLE OR AS DIRECTED BY THE ENGINEER.
CHAMFER ALL EXPOSED CORNERS 1".
DRAWING NOT TO SCALE.
* INCREASE THE SIZE OF THE 6" OPENING TO 8" MAX., AS DIRECTED BY THE ENGINEER BY ADDING 2" TO THE WALL HEIGHT ABOVE THE TOP ELEVATION. ADJUST QUANTITIES ACCORDINGLY.

MIN. DIMENSIONS AND QUANTITIES FOR CONCRETE CATCH BASIN (BASED ON MIN. HEIGHT, H)

DIM'S OF BOX & PIPE				REINFORCING						TOP & BOT. SLAB DIMENSIONS		CU. YDS. CONC. IN BOX		TOTAL QUANTITIES BOX & SLABS			DEDUCTION ONE PIPE		C.Y. ONE PIPE 6" THROAT OPENING
PIPE	SPAN	WIDTH	HEIGHT	BARS - X		BARS - Y		BARS - Z											
D	A	B	H	NO.	LENGTH	NO.	LENGTH	NO.	LENGTH	F	G	TOP SLAB	BOT. SLAB	WALL (FT. OF HT.)	LBS. REINF	CU. YDS. REINF	C.S.	R.C.	YD³
12"	3'-6"	2'-3"	1'-10"	4	3'-0"	6	4'-3"	2	4'-3"	4'-6"	3'-3"	0.181	0.271	0.250	27	1.046	0.015	0.032	0.046
15"	3'-6"	2'-3"	2'-1"	4	3'-0"	6	4'-3"	2	4'-3"	4'-6"	3'-3"	0.181	0.271	0.250	27	1.108	0.023	0.036	0.046
18"	4'-0"	2'-8"	2'-4"	5	3'-5"	7	4'-9"	2	4'-9"	5'-0"	3'-8"	0.226	0.340	0.284	35	1.379	0.033	0.049	0.053
24"	4'-0"	2'-8"	2'-10"	5	3'-5"	7	4'-9"	2	4'-9"	5'-0"	3'-8"	0.226	0.340	0.284	35	1.521	0.059	0.085	0.053
30"	4'-0"	3'-6"	3'-4"	5	4'-3"	8	4'-9"	2	4'-9"	5'-0"	4'-6"	0.278	0.417	0.315	43	1.816	0.092	0.127	0.053
36"	4'-6"	4'-0"	3'-10"	5	4'-9"	10	5'-3"	2	5'-3"	5'-6"	5'-0"	0.340	0.510	0.352	51	2.390	0.132	0.178	0.059
42"	5'-0"	4'-6"	4'-4"	5	5'-3"	12	5'-9"	2	5'-9"	6'-0"	5'-6"	0.407	0.611	0.389	64	2.914	0.180	0.243	0.066
48"	5'-0"	5'-0"	4'-10"	5	5'-9"	13	5'-9"	2	5'-9"	6'-0"	6'-0"	0.444	0.666	0.407	68	3.298	0.235	0.317	0.066

STATE OF NORTH CAROLINA DEPT. OF TRANSPORTATION DIVISION OF HIGHWAYS RALEIGH, N.C.

1-18

ROADWAY STANDARD DRAWING FOR
CONCRETE OPEN THROAT CATCH BASIN
12" THRU 48" PIPE

SHEET 1 OF 2
840.04

NO.	DATE	REVISION:

STIPULATION FOR REUSE

THIS DRAWING WAS PREPARED FOR USE ON THE SPECIFIC SITE, NAMED HEREON, COMPORANEOUSLY WITH ITS ISSUE DATE AS LISTED, HEREON, AND IT IS NOT SUITABLE FOR USE ON A DIFFERENT PROJECT SITE OR AT A LATER TIME. USE OF THIS DRAWING FOR REFERENCE OR EXAMPLE ON ANOTHER PROJECT REQUIRES THE SERVICES OF PROPERLY LICENSED ARCHITECTS AND ENGINEERS. REPRODUCTION OF THIS DRAWING FOR REUSE ON ANOTHER PROJECT IS NOT AUTHORIZED AND MAY BE CONTRARY TO THE LAW.

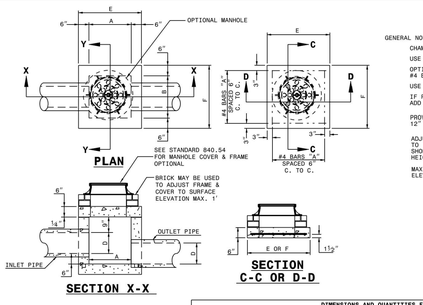

GENERAL NOTES:
CHAMFER ALL EXPOSED CORNERS 1".
USE CLASS "B" CONCRETE THROUGHOUT.
OPTIONAL CONSTRUCTION - MONOLITHIC POUR, 2" KEYWAY, OR #4 BAR DOWELS AT 12" CENTERS AS DIRECTED BY THE ENGINEER.
USE FORMS TO CONSTRUCT THE BOTTOM SLAB.
IF REINFORCED CONCRETE PIPE IS SET IN BASE SLAB OF BOX, ADD TO BASE AS SHOWN ON STANDARD NO. 840.00.
PROVIDE ALL JUNCTION BOXES OVER 3'-6" IN DEPTH WITH STEPS 12" ON CENTERS IN ACCORDANCE WITH STD. NO. 840.66.
ADJUST THE STEEL, CONCRETE AND BRICK MASONRY QUANTITIES TO INCLUDE THE ADDITION OF THE MANHOLE (I.E. DIAGONAL BARS SHORTENED AROUND OPENING IN TOP SLAB, ADDITIONAL VARIABLE HEIGHT BRICK MASONRY, OPENING IN TOP SLAB.)
MAX. DEPTH OF THIS STRUCTURE FROM TOP OF BOTTOM SLAB TO TOP ELEVATION IS 12 FEET.

DIMENSIONS AND QUANTITIES FOR CONCRETE JUNCTION BOXES

DIMENSIONS OF BOX AND PIPE				REINFORCEMENT BARS "A"		TOP SLAB DIMENSIONS		CUBIC YARDS IN BOX			TOTAL QUANTITIES BOX AND SLABS			DEDUCTIONS FOR ONE PIPE	
PIPE	SPAN	WIDTH	HEIGHT	NO.	LENGTH	E	F	TOP SLAB	BOTTOM SLAB	WALL/ FT. OF HT.	LBS. REINF	CU. YDS. MIN. "H"		C.S.	R.C.
D	A	B	H												
12"	2'-0"	2'-0"	2'-3"	12	2'-9"	3'-0"	3'-0"	0.167	0.167	0.185	22	0.750		0.015	0.024
15"	2'-3"	2'-3"	2'-6"	12	3'-0"	3'-3"	3'-3"	0.196	0.196	0.204	24	0.902		0.023	0.036
18"	2'-6"	2'-6"	2'-9"	14	3'-3"	3'-6"	3'-6"	0.227	0.227	0.222	30	1.065		0.033	0.049
24"	3'-0"	3'-0"	3'-3"	16	3'-9"	4'-0"	4'-0"	0.296	0.296	0.259	40	1.434		0.059	0.085
30"	3'-6"	3'-6"	3'-9"	18	4'-3"	4'-6"	4'-6"	0.375	0.375	0.296	51	1.860		0.092	0.127
36"	4'-0"	4'-0"	4'-3"	20	4'-9"	5'-0"	5'-0"	0.463	0.463	0.333	64	2.341		0.132	0.178
42"	4'-6"	4'-6"	4'-9"	22	5'-3"	5'-6"	5'-6"	0.560	0.560	0.370	77	2.878		0.180	0.243
48"	5'-4"	5'-4"	5'-3"	26	6'-3"	6'-4"	6'-4"	0.743	0.743	0.407	111	3.623		0.235	0.317
54"	5'-10"	5'-10"	5'-9"	28	6'-7"	6'-10"	6'-10"	0.865	0.865	0.444	126	4.283		0.297	0.401
60"	6'-6"	6'-6"	6'-3"	30	7'-3"	7'-6"	7'-6"	1.042	1.042	0.481	145	5.090		0.367	0.495
66"	7'-1"	7'-1"	6'-9"	32	7'-10"	8'-1"	8'-1"	1.210	1.210	0.518	169	5.917		0.444	0.589

STATE OF NORTH CAROLINA DEPT. OF TRANSPORTATION DIVISION OF HIGHWAYS RALEIGH, N.C.

1-18

ROADWAY STANDARD DRAWING FOR
CONCRETE JUNCTION BOX
(WITH OPTIONAL MANHOLE)
12" THRU 66" PIPE

SHEET 1 OF 1
840.31

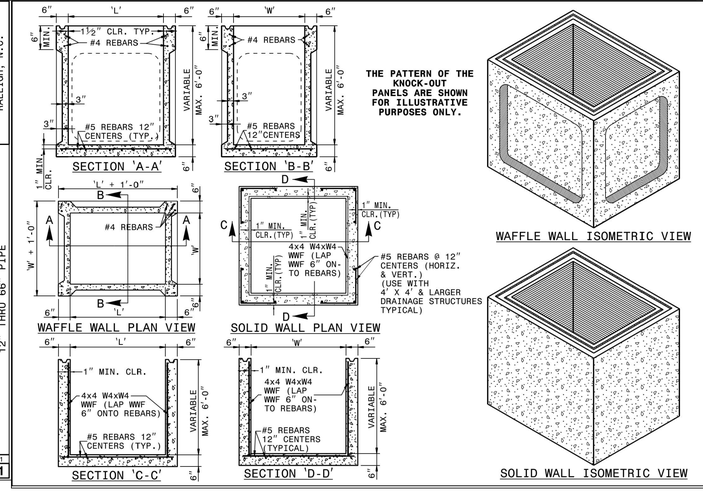

STATE OF NORTH CAROLINA DEPT. OF TRANSPORTATION DIVISION OF HIGHWAYS RALEIGH, N.C.

1-18

ROADWAY STANDARD DRAWING FOR
PRECAST DRAINAGE STRUCTURE
(SOLID AND WAFFLE WALL)

SHEET 1 OF 2
840.45

GENERAL NOTES:
* THIS PRECAST BOX MAY BE USED FOR THE FOLLOWING STANDARDS: 840.01, 840.02, 840.04, 840.05, 840.13, 840.14, 840.15, 840.17, 840.18, 840.19, 840.26, 840.27, 840.28, 840.31, 840.32 AND 840.41.
* INSTALL PRECAST DRAINAGE STRUCTURES AND PAY FOR IN ACCORDANCE WITH SPECIFICATION SECTION 840.
* DO NOT PLACE PRECAST DRAINAGE STRUCTURES UNDER TRAFFIC OR WHERE TRAFFIC WILL BE DETOURED.
* USE 4000 PSI CONCRETE.
* PROVIDE ALL REINFORCING STEEL WHICH MEETS ASTM A615 FOR GRADE 60 AND WELDED WIRE FABRIC CONFORMING TO ASTM A1064.
* LIMIT MAXIMUM DEPTH TO TOP OF BOTTOM SLAB FOR WAFFLE WALL STRUCTURE TO 10'-0"; LIMIT SOLID WALL STRUCTURE TO 15'-0".
* PLACE LIFT HOLES OR PINS IN ACCORDANCE WITH OSHA STANDARD 1926.704.
* CUT OR FORM OPENINGS FOR PIPE TO PROVIDE REQUIRED SIZE AND LOCATION. ORIENT WAFFLE WALL STRUCTURES SO THAT PIPES ENTER THROUGH THE KNOCKOUT/WAFFLE PANELS ONLY. PIPES MAY ENTER THROUGH THE CORNERS OF SOLID WALL BOXES IF A MINIMUM OF 6" OF WALL IS PROVIDED ABOVE THE HOLE.
* ALL ELEMENTS PRECAST TO MEET ASTM C913.
* FRAME AND GRATE HEIGHT MAY BE ADJUSTED WITH CONCRETE OR BRICK IN ACCORDANCE WITH STANDARD 840.25.
* PROVIDE PRECAST STRUCTURES OVER 4'-0" IN DEPTH WITH STEPS AS DIRECTED BY THE ENGINEER.
* WELDED WIRE FABRIC MAY BE SUBSTITUTED FOR REBAR AS LONG AS THE SAME AREA OF STEEL IS PROVIDED.
* SEAL JOINTS WITH A FLEXIBLE BUTYL RUBBER BASE CONFORMING TO FEDERAL SPECIFICATION SS-S-21A, AASHTO M-198, TYPE B - BUTYL RUBBER.
* LIMIT MAXIMUM STRUCTURE SIZE TO INSIDE CLEAR DIMENSIONS OF 5'-0" X 5'-0".
* THE OUTSIDE PIPE DIAMETER PLUS 2" OR THE OPENING REQUIRED FOR FRAME AND GRATE IS THE MINIMUM STRUCTURE SIZE WHICHEVER IS GREATER.
* USE MANHOLE FRAME AND COVER AS INDICATED ON THE PLANS. REINFORCE OPENING AS SHOWN ON THIS SHEET.

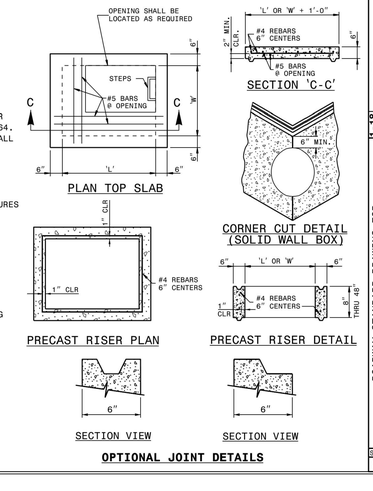

STATE OF NORTH CAROLINA DEPT. OF TRANSPORTATION DIVISION OF HIGHWAYS RALEIGH, N.C.

1-18

ROADWAY STANDARD DRAWING FOR
PRECAST DRAINAGE STRUCTURE
(GENERAL NOTES AND DETAILS)

SHEET 2 OF 2
840.45

THE PRESERVE AT MOODY FARM
ROLESVILLE ROAD
WAKE COUNTY, NC

JOB NUMBER: 21-002
CHECKED BY: JK
DRAWN BY: RC & SM
DATE: 12/02/2024
SHEET TITLE:
DRAINAGE DETAILS
SHEET NO.:
CD12

CITY OF RALEIGH - PLANS AUTHORIZED FOR CONSTRUCTION
Electronic Approval: This approval is being issued electronically. This approval is valid only upon the signature of a City of Raleigh Review Officer below. The City will retain a copy of the approved plans. Any work authorized by this approval must proceed in accordance with the plans kept on file with the City. This electronic approval may not be edited once issued. Any modification to this approval once issued will invalidate this approval.
City of Raleigh Development Approval _____
Raleigh Water Review Officer

North Carolina 811
*** 3 Days Before Digging ***
North Carolina 811
811 or 1-800-632-4949
Remote Ticket Entry
http://nc811.org/remoteticketentry.htm

December 2, 2024
Z:\2021\21-002 Moody Development Trust (R21002D)\Engr_Working\Dwgs\Construction Set\CD3 Project Details.dwg

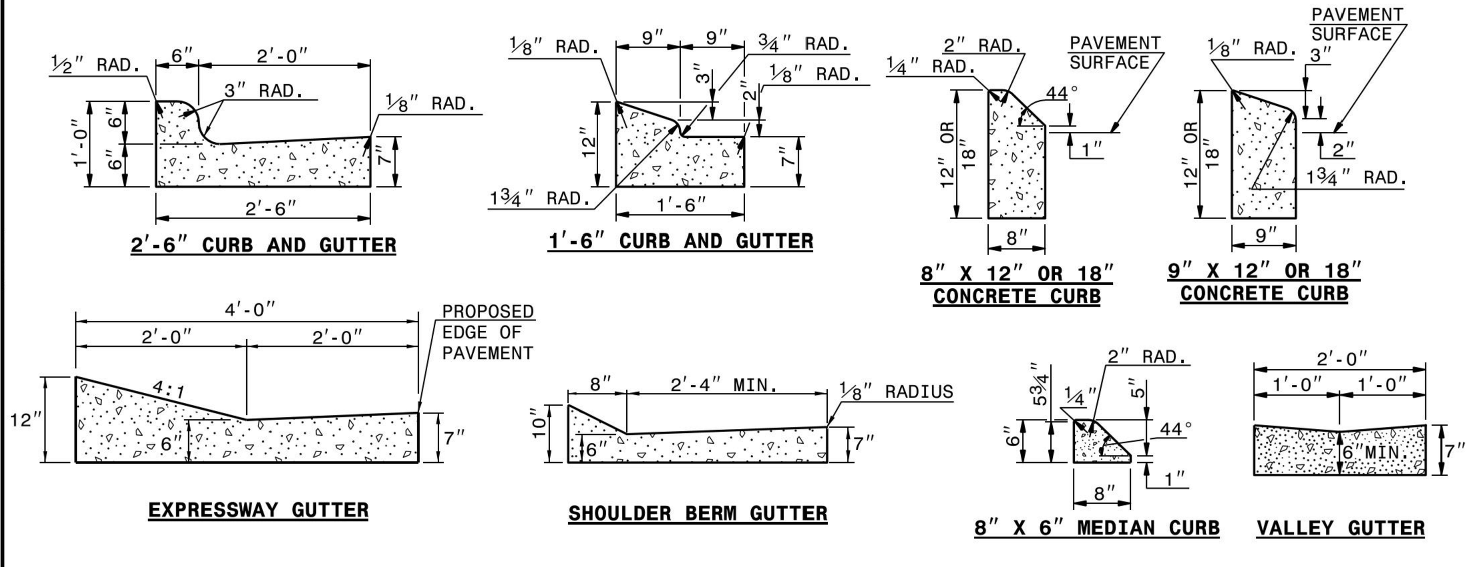

SECTION VIEW OF CURBS OR CURBS AND GUTTERS

GENERAL NOTES:
- PLACE CONTRACTION JOINTS AT 10' INTERVALS, EXCEPT THAT A 15' SPACING MAY BE USED WHEN A MACHINE IS USED OR WHEN SATISFACTORY SUPPORT FOR THE FACE FORM CAN BE OBTAINED WITHOUT THE USE OF TEMPLATES AT 10' INTERVALS.
- JOINT SPACING MAY BE ALTERED IF REQUIRED BY THE ENGINEER.
- CONTRACTION JOINTS MAY BE INSTALLED WITH THE USE OF TEMPLATES OR FORMED BY OTHER APPROVED METHODS. CONSTRUCT NON-TEMPLATE FORMED JOINTS A MIN. OF 1½" DEEP.
- FILL ALL CONSTRUCTION JOINTS, EXCEPT IN 8"x6" MEDIAN CURB, WITH JOINT FILLER AND SEALER.
- SPACE EXPANSION JOINTS AT 90' INTERVALS AND ADJACENT TO ALL RIGID OBJECTS.

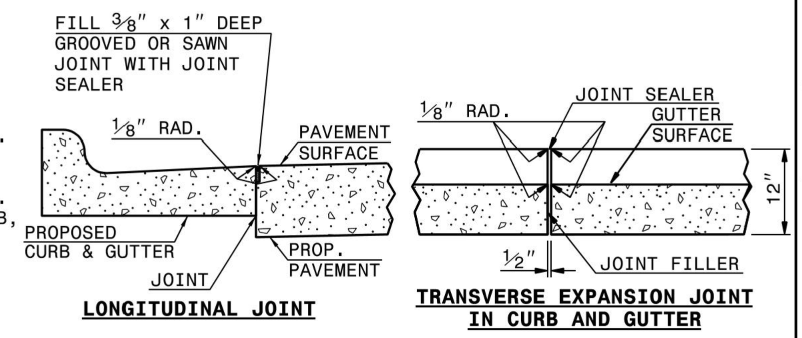

SECTION VIEW OF JOINTS

1-18 STATE OF NORTH CAROLINA DEPT. OF TRANSPORTATION DIVISION OF HIGHWAYS RALEIGH, N.C.

ROADWAY STANDARD DRAWING FOR **CONCRETE CURB, GUTTER AND CURB & GUTTER**

SHEET 1 OF 3 **846.01**

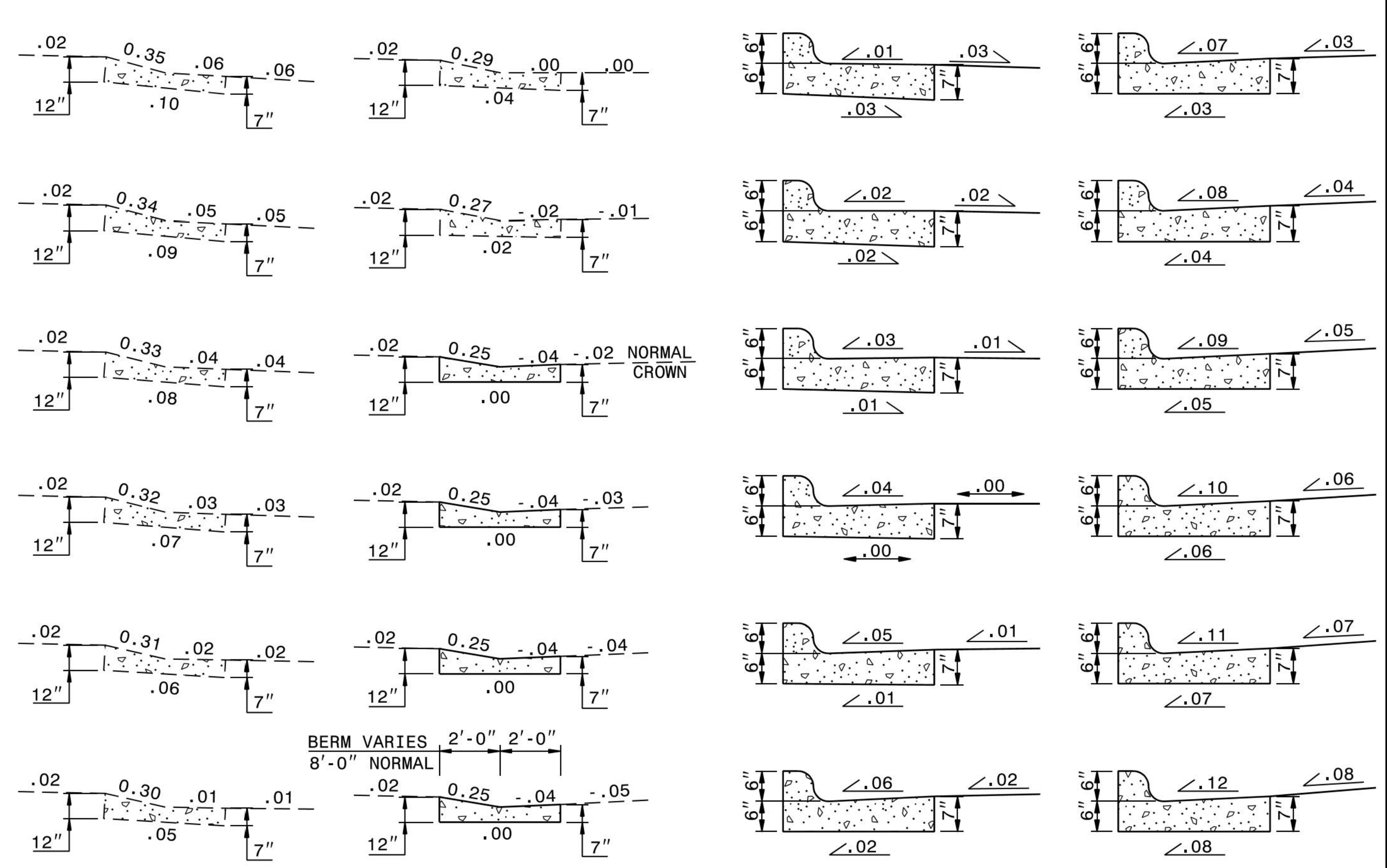

SECTION VIEWS OF EXPRESSWAY GUTTER IN SUPER ELEVATION

SECTION VIEWS OF 2'-6" CURB AND GUTTER SUPERELEVATION RATES

1-18 STATE OF NORTH CAROLINA DEPT. OF TRANSPORTATION DIVISION OF HIGHWAYS RALEIGH, N.C.

ROADWAY STANDARD DRAWING FOR **CONCRETE CURB, GUTTER AND CURB & GUTTER**

SHEET 2 OF 3 **846.01**

TYPE III BARRICADE **TYPE III BARRICADE** END-OF-ROADWAY APPLICATIONS

GENERAL NOTES

1-HORIZONTAL RAILS FOR TYPE-III BARRICADES MAY BE HOLLOW/CORRUGATED EXTRUDED RIGID POLYOLEFIN, HIGH DENSITY POLYETHYLENE, OR OTHER NCDOT APPROVED RAILS. PLASTIC TYPE RAILS MUST BE FLAME TREATED BY THE MANUFACTURER SO THAT REFLECTIVE SHEETING MAY ADHERE PROPERLY.

2-BARRICADE SHALL BE LIMITED TO A MAXIMUM LENGTH OF 2.4m UNLESS NCHRP 350 CRASH TESTED AND NCDOT APPROVED.

3-ONLY NCDOT APPROVED COMPOSITE AND ROLL-UP SIGNS MAY BE MOUNTED ON THE BARRICADE RAILS. MOUNT SIGNS TO BARRICADED RAILS USING MINIMUM SIZES BOLT TO ENSURE SIGN WILL NOT BECOME DETACHED UNDER NORMAL WIND AND TRAFFIC CONDITIONS.

4-SIGNS MOUNTED ON BARRICADES SHOULD NOT COVER MORE THAN 50 PERCENT OF THE TOP TWO RAILS OR 33 PERCENT OF THE TOTAL AREA OF THE THREE RAILS.

5-USE TYPE VII, VIII OR IX RETROREFLECTIVE SHEETING ON BOTH SIDES OF THE BARRICADE RAILS.

6-BARRICADE MUST BE NCHRP 350 AND NCDOT APPROVED WITH STABILIZER BAR OR ADEQUATE LATERAL BRACING.

7-ASSEMBLY OF THE GENERIC BARRICADES MUST BE SELF CERTIFIED BY THE ASSEMBLER.

8-BARRICADES USED TO CLOSE A ROADWAY SHALL EXTEND ACROSS THE ENTIRE ROADWAY. WHERE LOCAL TRAFFIC MUST BE MAINTAINED, THEY MAY BE PLACED IN A STAGGERED PATTERN.

9-STRIPES ON WORK ZONE BARRICADE RAILS SHALL BE ALTERNATE ORANGE AND WHITE RETROREFLECTIVE STRIPES, SLOPED DOWNWARD TOWARDS THE SIDE WHICH TRAFFIC IS TO PASS OR TURN IN DETOURING. WHERE NO TURNS ARE INTENDED, THE STRIPES SHOULD SLOPE DOWNWARD TOWARD THE CENTER OF THE BARRICADE OR BARRICADES. USE RED AND WHITE STRIPES FOR PERMANENT BARRICADES.

10-SEE NCDOT APPROVED PRODUCTS LIST FOR MANUFACTURERS OF APPROVED BARRICADES.

11-PLACE MANUFACTURER'S NAME AND FEDERAL HIGHWAY ADMINISTRATION'S NCHRP 350 APPROVAL LETTER NUMBER ON BARRICADE FRAME.

12-PLACE SANDBAGS ON FEET OF THE FRAME FOR BALLASTING. DO NOT PLACE SANDBAGS ON TOP OF A STRIPED RAIL OR STABILIZER BAR. DO NOT BALLAST BARRICADES BY HEAVY OBJECTS SUCH AS ROCKS, CHUNKS OF CONCRETE OR OTHER ITEMS THAT WOULD CAUSE DAMAGE IF THE BARRICADE IS STRUCK BY A VEHICLE.

NOTE:
THIS DRAWING IS DIMENSIONED IN MILLIMETERS UNLESS OTHERWISE DEPICTED WITHIN THE DRAWING.

7-06 STATE OF NORTH CAROLINA DEPT. OF TRANSPORTATION DIVISION OF HIGHWAYS RALEIGH, N.C.

METRIC STANDARD DRAWING FOR **BARRICADES** TYPE-III

SHEET 1 OF 1 **1145.01**

7-06 STATE OF NORTH CAROLINA DEPT. OF TRANSPORTATION DIVISION OF HIGHWAYS RALEIGH, N.C.

METRIC STANDARD DRAWING FOR **BARRICADES** TYPE-III

SHEET 1 OF 1 **1145.01**

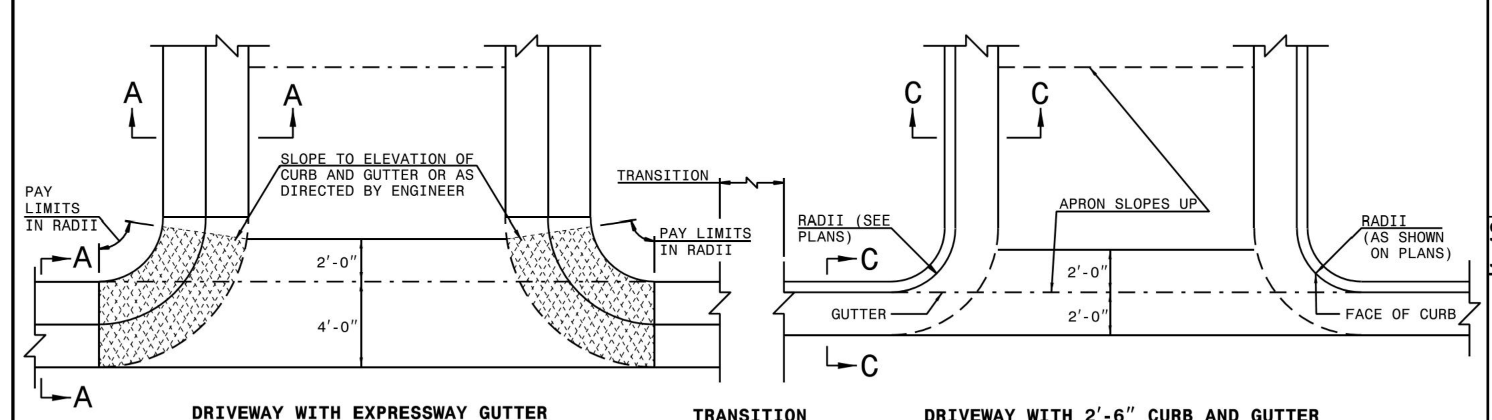

PLAN VIEW OF TYPICAL CURB AND GUTTER OCCURENCES

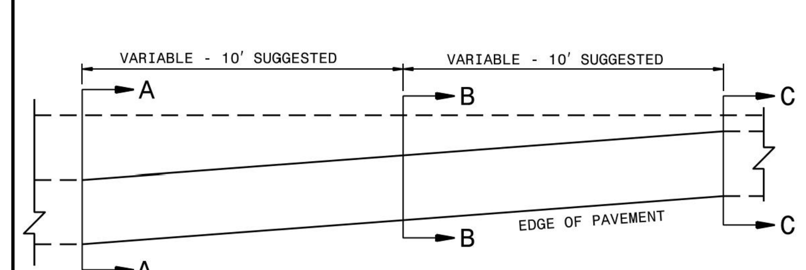

PLAN VIEW OF TRANSITION
EXPRESSWAY GUTTER TO 2'-6" CURB AND GUTTER

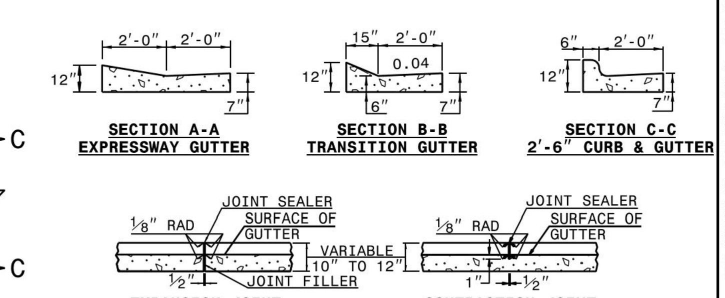

NOTES:
- IN THE TRANSITION FROM 4'-0" CONCRETE EXPRESSWAY GUTTER TO 2'-6" CONCRETE CURB AND GUTTER, PLACE ½" EXPANSION JOINTS AT 25' INTERVALS.
- PLACE GROOVE JOINTS 1" DEEP AT 12'-6" INTERVALS BETWEEN EXPANSION JOINTS.
- FILL AND SEAL THE TOP ½" OF THE EXPANSION JOINTS AND 1" OF CONTRACTION JOINTS WITH APPROVED JOINT SEALING COMPOUND.

1-18 STATE OF NORTH CAROLINA DEPT. OF TRANSPORTATION DIVISION OF HIGHWAYS RALEIGH, N.C.

ROADWAY STANDARD DRAWING FOR **CONCRETE CURB, GUTTER AND CURB & GUTTER**

SHEET 3 OF 3 **846.01**

NOTES:
1. CONSTRUCT THE RAMP SURFACE TO BE STABLE, FIRM, AND SLIP RESISTANT. CONSTRUCT THE CURB RAMP TYPE AS SHOWN IN THE PAVEMENT MARKING PLANS OR AS DIRECTED BY THE ENGINEER.
2. LOCATE CURB RAMPS AND PLACE PEDESTRIAN CROSSWALK MARKINGS AS SHOWN IN THE PAVEMENT MARKING PLANS. WHEN FIELD ADJUSTMENTS REQUIRE MOVING CURB RAMPS OR MARKINGS AS SHOWN, CONTACT THE SIGNING AND DELINEATION UNIT OR LOCATE AS DIRECTED BY THE ENGINEER.
3. COORDINATE THE CURB RAMP AND THE PEDESTRIAN CROSSWALK MARKINGS SO A 4'x4' CLEAR SPACE AT THE BASE OF THE CURB RAMP WILL FALL WITHIN THE PEDESTRIAN CROSSWALK LINES.
4. SET BACK DISTANCE FROM INSIDE CROSSWALK MARKING TO NEAREST EDGE OF TRAVEL LANE IS 4' MINIMUM.
5. REFER TO THE PAVEMENT MARKING PLANS FOR STOP BAR LOCATIONS AT SIGNALIZED INTERSECTIONS. IF A PAVEMENT MARKING PLAN IS NOT PROVIDED, CONTACT THE SIGNAL DESIGN SECTION FOR THE STOP BAR LOCATIONS OR LOCATE AS DIRECTED BY THE ENGINEER.
6. TERMINATE PARKING A MINIMUM OF 20' BACK OF A PEDESTRIAN CROSSWALK.
7. CONSTRUCT CURB RAMPS A MINIMUM OF 4' WIDE.
8. CONSTRUCT THE RUNNING SLOPE OF THE RAMP 8.33% MAXIMUM.
9. ALLOWABLE CROSS SLOPE ON SIDEWALKS AND CURB RAMPS WILL BE 2% MAXIMUM.
10. CONSTRUCT THE SIDE FLARE SLOPE A MAXIMUM OF 10% MEASURED ALONG THE CURB LINE.
11. CONSTRUCT THE COUNTER SLOPE OF THE GUTTER OR STREET AT THE BASE OF THE CURB RAMP A MAXIMUM OF 5% AND MAINTAIN A SMOOTH TRANSITION.
12. CONSTRUCT LANDINGS FOR SIDEWALK A MINIMUM OF 4'x4' WITH A MAXIMUM SLOPE OF 2% IN ANY DIRECTION. CONSTRUCT LANDINGS FOR MEDIAN ISLANDS A MINIMUM OF 5'x5' WITH A MAXIMUM SLOPE OF 2% IN ANY DIRECTION.
13. TO USE A MEDIAN ISLAND AS A PEDESTRIAN REFUGE AREA, MEDIAN ISLANDS WILL BE A MINIMUM OF 6' WIDE. CONSTRUCT MEDIAN ISLANDS TO PROVIDE PASSAGE OVER OR THROUGHT THE ISLAND.
14. SMALL CHANNELIZATION ISLANDS THAT CAN NOT PROVIDE A 5'X5' LANDING AT THE TOP OF A RAMPS, WILL BE CUT THROUGH LEVEL WITH THE SURFACE STREET.
15. CURB RAMPS WITH RETURNED CURBS MAY BE USED ONLY WHERE PEDESTRIANS WOULD NOT NORMALLY WALK ACROSS THE RAMP. THE ADJACENT SURFACE IS PLANTING OR OTHER NON-WALKING SURFACE OR THE SIDE APPROACH IS SUBSTANTIALLY OBSTRUCTED.
16. PLACE A ½" EXPANSION JOINT WHERE THE CONCRETE CURB RAMP JOINS THE CURB AS SHOWN IN ROADWAY STANDARD DRAWING 848.01
17. PLACE ALL PEDESTRIAN PUSH BUTTON ACTUATORS AND CROSSING SIGNALS AS SHOWN IN THE PLANS OR AS SHOWN IN THE MUTCD.
18. CURB RAMPS THROUGH MEDIAN ISLANDS, SINGLE RAMPS AT DUAL CROSSWALKS OR LIMITED R/W SITUATIONS, WILL BE HANDLED BY SPECIAL DETAILS. CONTACT THE CONTRACT STANDARDS AND DEVELOPMENT UNIT FOR THE DETAILS OR FOR A SPECIAL DESIGN.

1-18 STATE OF NORTH CAROLINA DEPT. OF TRANSPORTATION DIVISION OF HIGHWAYS RALEIGH, N.C.

ROADWAY STANDARD DRAWING FOR **CURB RAMPS** NOTES

SHEET 3 OF 3 **848.05**

CURB RAMP AND EXISTING SIDEWALK

NOTES:
1. CONSTRUCT THE RAMP SURFACE TO BE STABLE, FIRM, AND SLIP RESISTANT. CONSTRUCT THE CURB RAMP TYPE AS SHOWN IN THE PAVEMENT MARKING PLANS OR AS DIRECTED BY THE ENGINEER.
2. LOCATE CURB RAMPS AND PLACE PEDESTRIAN CROSSWALK MARKINGS AS SHOWN IN THE PAVEMENT MARKING PLANS. WHEN FIELD ADJUSTMENTS REQUIRE MOVING CURB RAMPS OR MARKINGS AS SHOWN, CONTACT THE SIGNING AND DELINEATION UNIT OR LOCATE AS DIRECTED BY THE ENGINEER.
3. COORDINATE THE CURB RAMP AND THE PEDESTRIAN CROSSWALK MARKINGS SO A 4'x4' CLEAR SPACE AT THE BASE OF THE CURB RAMP WILL FALL WITHIN THE PEDESTRIAN CROSSWALK LINES.
4. SET BACK DISTANCE FROM INSIDE CROSSWALK MARKING TO NEAREST EDGE OF TRAVEL LANE IS 4' MINIMUM.
5. REFER TO THE PAVEMENT MARKING PLANS FOR STOP BAR LOCATIONS AT SIGNALIZED INTERSECTIONS. IF A PAVEMENT MARKING PLAN IS NOT PROVIDED, CONTACT THE SIGNAL DESIGN SECTION FOR THE STOP BAR LOCATIONS OR LOCATE AS DIRECTED BY THE ENGINEER.
6. TERMINATE PARKING A MINIMUM OF 20' BACK OF A PEDESTRIAN CROSSWALK.
7. CONSTRUCT CURB RAMPS A MINIMUM OF 4' WIDE.
8. CONSTRUCT THE RUNNING SLOPE OF THE RAMP 8.33% MAXIMUM.
9. ALLOWABLE CROSS SLOPE ON SIDEWALKS AND CURB RAMPS WILL BE 2% MAXIMUM.
10. CONSTRUCT THE SIDE FLARE SLOPE A MAXIMUM OF 10% MEASURED ALONG THE CURB LINE.
11. CONSTRUCT THE COUNTER SLOPE OF THE GUTTER OR STREET AT THE BASE OF THE CURB RAMP A MAXIMUM OF 5% AND MAINTAIN A SMOOTH TRANSITION.
12. CONSTRUCT LANDINGS FOR SIDEWALK A MINIMUM OF 4'x4' WITH A MAXIMUM SLOPE OF 2% IN ANY DIRECTION. CONSTRUCT LANDINGS FOR MEDIAN ISLANDS A MINIMUM OF 5'x5' WITH A MAXIMUM SLOPE OF 2% IN ANY DIRECTION.
13. TO USE A MEDIAN ISLAND AS A PEDESTRIAN REFUGE AREA, MEDIAN ISLANDS WILL BE A MINIMUM OF 6' WIDE. CONSTRUCT MEDIAN ISLANDS TO PROVIDE PASSAGE OVER OR THROUGHT THE ISLAND.
14. SMALL CHANNELIZATION ISLANDS THAT CAN NOT PROVIDE A 5'X5' LANDING AT THE TOP OF A RAMPS, WILL BE CUT THROUGH LEVEL WITH THE SURFACE STREET.
15. CURB RAMPS WITH RETURNED CURBS MAY BE USED ONLY WHERE PEDESTRIANS WOULD NOT NORMALLY WALK ACROSS THE RAMP. THE ADJACENT SURFACE IS PLANTING OR OTHER NON-WALKING SURFACE OR THE SIDE APPROACH IS SUBSTANTIALLY OBSTRUCTED.
16. PLACE A ½" EXPANSION JOINT WHERE THE CONCRETE CURB RAMP JOINS THE CURB AS SHOWN IN ROADWAY STANDARD DRAWING 848.01
17. PLACE ALL PEDESTRIAN PUSH BUTTON ACTUATORS AND CROSSING SIGNALS AS SHOWN IN THE PLANS OR AS SHOWN IN THE MUTCD.
18. CURB RAMPS THROUGH MEDIAN ISLANDS, SINGLE RAMPS AT DUAL CROSSWALKS OR LIMITED R/W SITUATIONS, WILL BE HANDLED BY SPECIAL DETAILS. CONTACT THE CONTRACT STANDARDS AND DEVELOPMENT UNIT FOR THE DETAILS OR FOR A SPECIAL DESIGN.

1-18 STATE OF NORTH CAROLINA DEPT. OF TRANSPORTATION DIVISION OF HIGHWAYS RALEIGH, N.C.

ROADWAY STANDARD DRAWING FOR **CURB RAMP** EXISTING CURB AND GUTTER

SHEET 5 OF 5 **848.06**

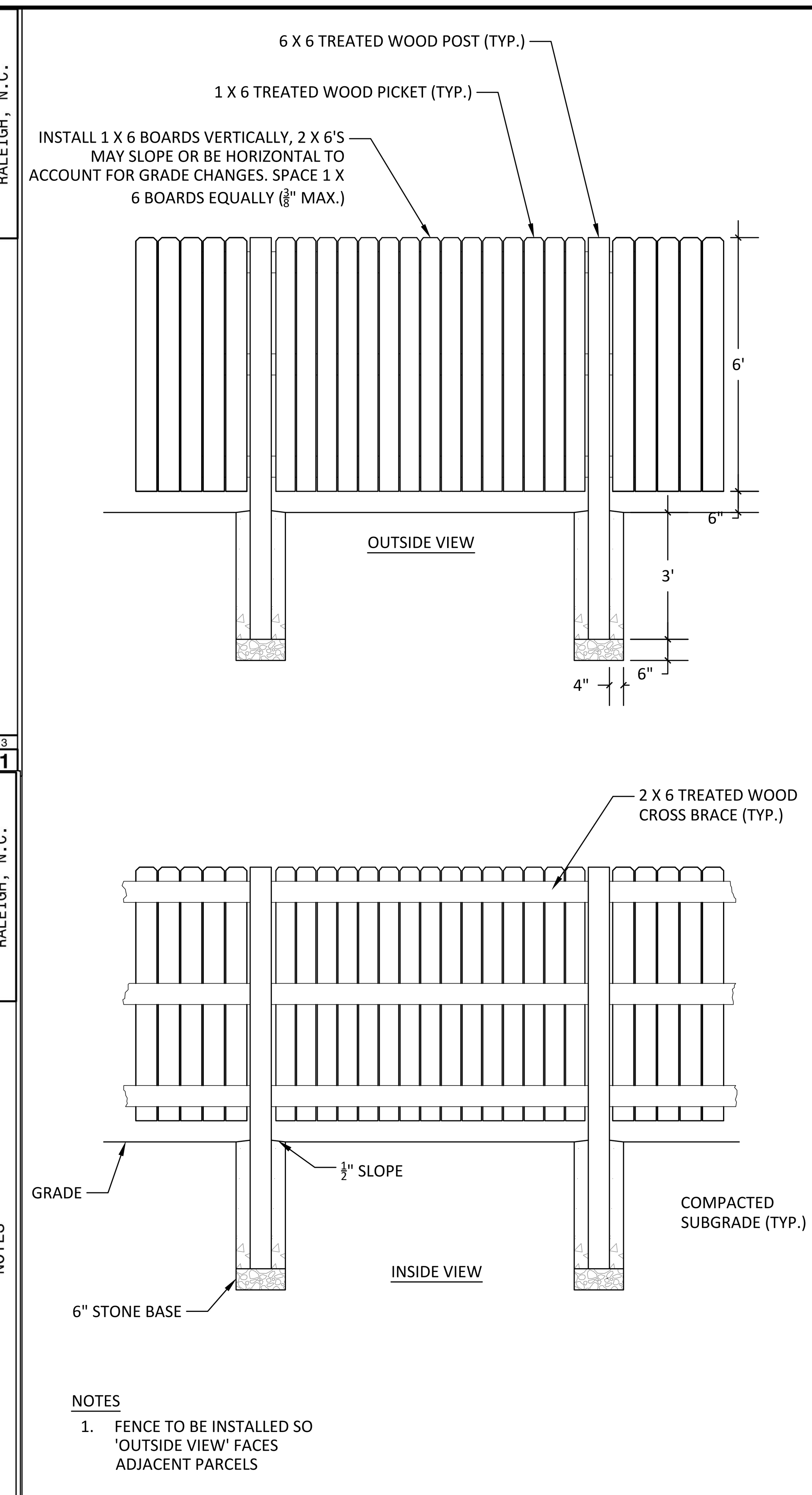

NOTES
1. FENCE TO BE INSTALLED SO 'OUTSIDE VIEW' FACES ADJACENT PARCELS

1 WOOD PICKET FENCE
NOT TO SCALE

CITY OF RALEIGH - PLANS AUTHORIZED FOR CONSTRUCTION

Electronic Approval: This approval is being issued electronically. This approval is valid only upon the signature of a City of Raleigh Review Officer below. The City will retain a copy of the approved plans. Any work authorized by this approval must proceed in accordance with the plans kept on file with the City. This electronic approval may not be edited once issued. Any modification to this approval once issued will invalidate this approval.

City of Raleigh Development Approval ______________________

Raleigh Water Review Officer

North Carolina 811 www.nc811.org
*** 3 Days Before Digging ***
North Carolina 811
811 or 1-800-632-4949
Remote Ticket Entry
http://nc811.org/remoteticketentry.htm

AMERICAN Engineering
American Engineering Associates - Southeast, P.A.
4020 Westchase Boulevard, Suite 450
Raleigh, NC 27607
919-469-1101

NORTH CAROLINA AMERICAN ENGINEERING ASSOCIATES SOUTHEAST C-3881 CERTIFICATE OF AUTHORIZATION

PRELIMINARY - DO NOT USE FOR CONSTRUCTION
NORTH CAROLINA PROFESSIONAL SEAL 56528 ENGINEER JAKOB P. KLEIN
Digitally signed by Jakob Klein Date: 2024.12.02 16:11:17 -05'00'

NO.	DATE	REVISION:

STIPULATION FOR REUSE

THIS DRAWING WAS PREPARED FOR USE ON THE SPECIFIC SITE, NAMED HEREON, CONTEMPORANEOUSLY WITH ITS ISSUE DATE AS LISTED, HEREON. AND IT IS NOT SUITABLE FOR USE ON A DIFFERENT PROJECT SITE OR AT A LATER TIME. USE OF THIS DRAWING FOR REFERENCE OR EXAMPLE ON ANOTHER PROJECT REQUIRES THE SERVICES OF PROPERLY LICENSED ARCHITECTS AND ENGINEERS. REPRODUCTION OF THIS DRAWING FOR REUSE ON ANOTHER PROJECT IS NOT AUTHORIZED AND MAY BE CONTRARY TO THE LAW.

THE PRESERVE
AT
MOODY FARM

ROLESVILLE ROAD
WAKE COUNTY, NC

JOB NUMBER: 21-002
CHECKED BY: JK
DRAWN BY: RC & SM
DATE: 12/02/2024

SHEET TITLE:
SITE DETAILS

SHEET NO.:
CD13

Z:\Jobs\21-002 Moody Development Tract (R210002)\dwg_Working Dwgs\Construction Set\CD1 Project Details.dwg December 2, 2024

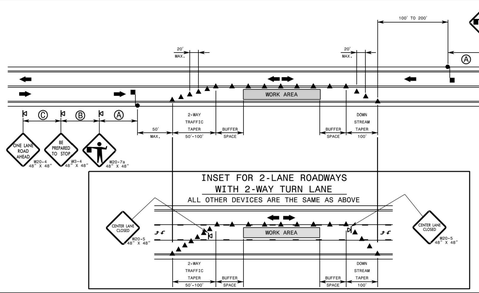

STATE OF NORTH CAROLINA
DEPT. OF TRANSPORTATION
DIVISION OF HIGHWAYS
RALEIGH, N.C.

1-18

ROADWAY STANDARD DRAWING FOR
TEMPORARY LANE CLOSURES
2-LANE, 2-WAY ROADWAY-1 LANE CLOSED

GENERAL NOTES FOR FLAGGING OPERATIONS

1- REFER TO RSD. 1101.11, SHEETS 1 & 4, FOR "L" DISTANCE AND SIGN SPACING.

2- INSTALL LANE CLOSURES WITH THE TRAFFIC FLOW, BEGINNING WITH DEVICES ON THE UPSTREAM SIDE OF TRAFFIC.

3- REMOVE LANE CLOSURES AGAINST THE TRAFFIC FLOW, BEGINNING WITH DEVICES ON THE DOWNSTREAM SIDE OF TRAFFIC.

4- PLACE CONES THRU THE WORK AREA AT THE MAXIMUM SPACING EQUAL IN FEET TO 2 TIMES THE POSTED SPEED LIMIT.

5- EXTEND LANE CLOSURES AT THE BUFFER SPACE SUCH THAT STOPPING SIGHT DISTANCE IS PROVIDED TO THE FLAGGER (REFER TO RSD. 1101.11, SHEET 2).

6- DO NOT STOP TRAFFIC IN ANY ONE DIRECTION FOR MORE THAN 5 MINUTES AT A TIME.

7- DRUMS OR SKINNY DRUMS MAY BE USED IN LIEU OF CONES. REFER TO RSD. 1180.01 FOR SKINNY DRUM REQUIREMENTS.

8- USE FLAGGERS TO CONTROL TRAFFIC AT INTERSECTIONS AFFECTED BY THE LANE CLOSURE. SUPPLEMENT FLAGGERS LOCATED AT INTERSECTIONS WITH FLASHER AHEAD SIGNS (W20-7A) WITH FLASHING ARROW SIGNS (W37-5) OR STOP/SLOW PADDLES (R1-7/R1-8). AT INTERSECTIONS PLACE SIGNALS IN THE FLASH MODE AND USE LAW ENFORCEMENT.

9- REFER TO THE CURRENT MUTCD FOR FLAGGER CONTROL, REQUIREMENTS, AND PROCEDURES.

10- DO NOT EXCEED A 1 MILE LANE CLOSURE LENGTH UNLESS OTHERWISE SHOWN IN THE TMP OR AS DIRECTED BY THE ENGINEER.

11- IF VEHICLE QUEUES WILL REACH WITHIN 15' OF EITHER SIDE OF ACTIVE RAILROAD TRACKS, PROVIDE A UNIFORMED LAW ENFORCEMENT OFFICER OR FLAGGER TO PREVENT VEHICLES FROM STOPPING WITHIN THE GRADE CROSSING. PROVIDE OFFICER OR FLAGGER EVEN IF AUTOMATIC WARNING MEASURES ALREADY EXIST.

GENERAL NOTES FOR PILOT CAR OPERATIONS

1- USE PILOT CARS WHEN DIRECTED BY THE ENGINEER.

2- IF ROADWAY WIDTH IS LESS THAN 22 FEET (EOP TO EOP), CONES MAY NOT BE REQUIRED. PLACE CONES AS DIRECTED BY THE ENGINEER. IF CONES ARE USED, CONES MAY BE OMITTED ALONG THE WORK AREA TO DENO A PILOT CAR.

3- CONES ARE ALWAYS REQUIRED IN THE UPSTREAM AND DOWNSTREAM TAPERS.

4- MOUNT SIGN G20-4 "PILOT CAR FOLLOW ME" AT A CONSPICUOUS POSITION ON THE REAR OF THE PILOT VEHICLE.

5- DO NOT INSTALL MORE THAN ONE (1) MILE OF LANE CLOSURE, MEASURED FROM THE BEGINNING OF THE MERGE TAPER TO THE END OF THE LANE CLOSURE.

6- ADVISE RESIDENTS AND BUSINESSES WITHIN THE LANE CLOSURE LIMITS ABOUT METHODS OF SAFE EGRESS AND INGRESS FROM DRIVEWAYS DURING FLAGGING AND PILOT CAR OPERATIONS.

LEGEND

- FLAGGER
- CONE
- PORTABLE SIGN
- DIRECTION OF TRAFFIC FLOW

SHEET 1 OF 14

1101.02

TWO-WAY UNDIVIDED (L-LINES)

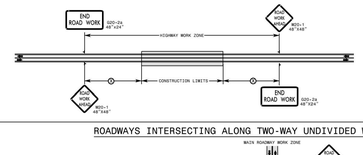

POSTED SPEED LIMIT (MPH)	RECOMMENDED MINIMUM SIGN SPACING X
≤ 50	500'
55	1000'

ROADWAYS INTERSECTING ALONG TWO-WAY UNDIVIDED WORK ZONE (Y-LINES)

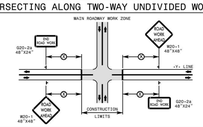

NO STATIONARY +Y- LINE ADVANCE WARNING SIGNAGE IS REQUIRED UNLESS THERE IS MORE THAN 1000' OF CONSTRUCTION ALONG THE +Y- LINE.

GENERAL NOTES

1- DO NOT INSTALL ADVANCE WARNING SIGNS MORE THAN 3 DAYS PRIOR TO BEGINNING OF WORK UNLESS COVERED.

2- SIGNS SHOWN ARE REQUIRED FOR WORK ZONES THAT WILL REMAIN IN EFFECT LONGER THAN 3 CONSECUTIVE DAYS.

3- ALL SIGN SPACING DIMENSIONS ARE APPROXIMATE, FIELD ADJUST AS NECESSARY OR AS DIRECTED.

4- ERECT SIGNS PER RSD 1110.01. PAYMENT FOR WOOD POSTS, 3LB STEEL U-CHANNEL AND SQUARE STEEL TUBING POSTS WITH SIGNS WILL BE MADE ACCORDING TO STANDARD SPECIFICATIONS FOR WORK ZONE SIGNS.

5- WHEN NECESSARY, USE SPLICING IN ACCORDANCE WITH RSD. 1110.01.

6- DO NOT BACK BRACE SIGN SUPPORTS.

LEGEND

- STATIONARY SIGN
- DIRECTION OF TRAFFIC FLOW

STATE OF NORTH CAROLINA
DEPT. OF TRANSPORTATION
DIVISION OF HIGHWAYS
RALEIGH, N.C.

1-18

ROADWAY STANDARD DRAWING FOR
WORK ZONE ADVANCE WARNING SIGNS FOR TWO-WAY UNDIVIDED FACILITIES

SHEET 3 OF 3

1101.01

28 INCH CONE

(MINIMUM SIZE CONE FOR ALL CLASSES OF ROADS EXCEPT FREEWAYS AND INTERSTATES)

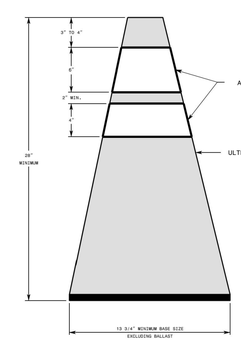

36 INCH CONE

(REQUIRED FOR FREEWAYS AND INTERSTATES)

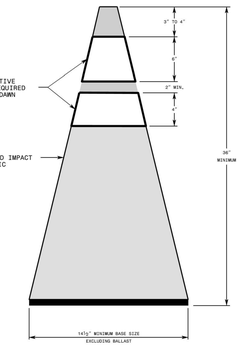

WHITE RETROREFLECTIVE ADHESIVE SHEETING REQUIRED BETWEEN DUSK AND DAWN

ORANGE ULTRA-VIOLET STABILIZED IMPACT RESISTANT PLASTIC

GENERAL NOTES

1- ACHIEVE BALLASTING BY USING SPECIAL WEIGHTED BASES SUCH AS SAND BAG RINGS, DOUBLING CONES, OR BASES THAT CAN BE FILLED WITH BALLAST. SEVENTY PERCENT OF THE WEIGHT OF THE CONE MUST BE IN THE BASE. USE BALLASTS THAT DO NOT PRESENT A HAZARD WHEN STRUCK.

2- ALL CONES MUST BE LISTED ON THE DEPARTMENT'S APPROVED PRODUCTS LIST.

STATE OF NORTH CAROLINA
DEPT. OF TRANSPORTATION
DIVISION OF HIGHWAYS
RALEIGH, N.C.

1-18

ROADWAY STANDARD DRAWING FOR
CONES

SHEET 1 OF 1

1135.01

CONTINUOUS LINES

- EDGE LINE — YELLOW OR WHITE — 4"/6"
- LANE LINE — WHITE — 4"/6"
- CENTER LINE — YELLOW — 4"/6"
- GORE LINE — WHITE — 8"/12"
- DIAGONAL LINE — YELLOW OR WHITE — 12" 45 MPH OR HIGHER; 8" LESS THAN 45 MPH
- CROSSWALK LINE — WHITE — 8" TRANSVERSE; 24" LONGITUDINAL
- RxR LINE — WHITE — 16"
- STOP OR TRANSVERSE BAR — WHITE — 24"

10'-30'/SP SKIP LINE

UNLESS OTHERWISED SHOWN, USE 10'-30'/SP SKIPS FOR SKIP LANE LINES AND SKIP CENTER LINES.

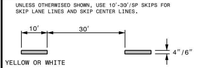

2'-6'/SP MINI-SKIP LINE

UNLESS OTHERWISED SHOWN, USE 2'-6'/SP MINI-SKIPS FOR LANE LINE EXTENSIONS THROUGH INTERSECTIONS, EDGE LINE EXTENSIONS THROUGH INTERSECTIONS AND MINI-SKIPS USED FOR BICYCLE LANE LINES.

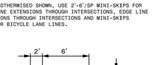

3'-3'/SP MINI-SKIP LINE

UNLESS OTHERWISED SHOWN, USE 3'-3'/SP MINI-SKIPS FOR THE WHITE EDGE LINE EXTENSIONS AT ROUNDABOUTS.

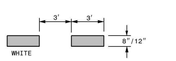

3'-9'/SP MINI-SKIP LINE

UNLESS OTHERWISED SHOWN, USE 3'-9'/SP MINI-SKIPS FOR MINI-SKIP LANE LINES AND LINE EXTENSIONS THROUGH TAPERS.

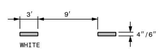

GENERAL NOTES:

1- USE 6" LANE, EDGE, AND CENTER LINES ON ALL FULL CONTROL OF ACCESS FACILITIES AND OTHER ROUTES AS DIRECTED BY THE ENGINEER.

2- LANE LINES INDICATED AS "WIDE" ON THE ROADWAY STANDARD DRAWINGS SHALL BE AT LEAST TWICE THE WIDTH OF THE NORMAL LINE.

3- GORE LINES SHALL BE TWICE THE WIDTH OF THE NORMAL LINE.

STATE OF NORTH CAROLINA
DEPT. OF TRANSPORTATION
DIVISION OF HIGHWAYS
RALEIGH, N.C.

1-18

ROADWAY STANDARD DRAWING FOR
PAVEMENT MARKINGS
LINE TYPES AND OFFSETS

SHEET 1 OF 2

1205.01

TWO-LANE, TWO-WAY ROADWAY

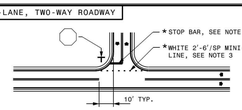

TWO-LANE, TWO-WAY ROADWAY WITH TWO-WAY LEFT TURN LANE

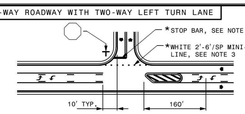

UNDIVIDED MULTI-LANE ROADWAY

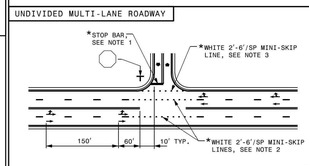

DIVIDED MULTI-LANE ROADWAY WITH TURN BAY

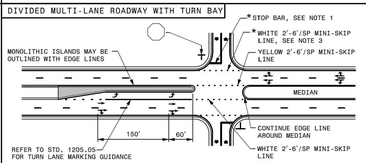

DIVIDED MULTI-LANE ROADWAY WITH WIDE MEDIAN CROSSOVER

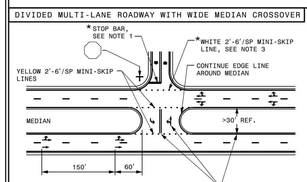

USE DOUBLE YELLOW CENTER LINE AND ARROW SYMBOLS IN MEDIAN CROSSOVER WHEN WIDTH OF MEDIAN EXCEEDS 30 FT, OTHERWISE THEY ARE NOT REQUIRED.

GENERAL NOTES:

1- PLACEMENT OF STOP BARS AT NON-SIGNALIZED INTERSECTIONS IS OPTIONAL AND USED WHERE IT IS IMPORTANT TO INDICATE THE POINT WHICH VEHICLES ARE REQUIRED TO STOP. PLACE STOP BARS NO LESS THAN 4 FEET AND NO MORE THAN 30 FEET FROM THE NEAREST EDGE OF THE INTERSECTING ROADWAY. USE 10 FEET AS THE TYPICAL SETBACK DISTANCE OR AS DIRECTED BY THE ENGINEER.

2- MINI-SKIP LANE LINE EXTENSIONS SHOULD BE USED AT INTERSECTIONS THAT HAVE REDUCED VISIBILITY CONDITIONS SUCH AS OFFSET, SKEWED, OR CURVED ROADWAYS.

3- MINI-SKIP EDGE LINE EXTENSIONS MAY BE PLACED THROUGH INTERSECTIONS AND MAJOR DRIVEWAYS.

4- REFER TO ROADWAY STANDARD DRAWINGS 1205.01, 1205.02, 1205.05, 1205.08 AND 1205.09 FOR ADDITIONAL PAVEMENT MARKING GUIDANCE.

LEGEND

- STOP SIGN
- STATIONARY SIGN
- DIRECTION OF TRAFFIC FLOW
- PAVEMENT MARKING SYMBOLS
- OPTIONAL

STATE OF NORTH CAROLINA
DEPT. OF TRANSPORTATION
DIVISION OF HIGHWAYS
RALEIGH, N.C.

1-18

ROADWAY STANDARD DRAWING FOR
PAVEMENT MARKINGS
INTERSECTIONS

SHEET 2 OF 2

1205.04

AMERICAN Engineering
American Engineering Associates - Southeast, P.A.
4020 Westchase Boulevard, Suite 450
Raleigh, NC 27607
919-469-1101

NORTH CAROLINA AMERICAN ENGINEERING ASSOCIATES SOUTHEAST C-3881 CERTIFICATE OF AUTHORIZATION

PRELIMINARY NOT FOR CONSTRUCTION
Digitally signed by JOSHUA P. KLEE
Date: 2025.02.05 08:52:02 -05'00'

NO.	DATE	REVISION:

STIPULATION FOR REUSE

THIS DRAWING WAS PREPARED FOR USE ON THE SPECIFIC SITE, NAMED HEREON, CONTEMPORANEOUSLY WITH ITS ISSUE DATE AS LISTED, HEREON, AND IT IS NOT SUITABLE FOR USE ON A DIFFERENT PROJECT SITE OR AT A LATER TIME. USE OF THIS DRAWING FOR REFERENCE OR EXAMPLE ON ANOTHER PROJECT REQUIRES THE SERVICES OF PROPERLY LICENSED ARCHITECTS AND ENGINEERS. REPRODUCTION OF THIS DRAWING FOR REUSE ON ANOTHER PROJECT IS NOT AUTHORIZED AND MAY BE CONTRARY TO THE LAW.

THE PRESERVE AT MOODY FARM

ROLESVILLE ROAD
WAKE COUNTY, NC

JOB NUMBER: 21-002
CHECKED BY: JK
DRAWN BY: RC & SM
DATE: 12/02/2024

SHEET TITLE:

SITE DETAILS

SHEET NO.:

CD14

CITY OF RALEIGH - PLANS AUTHORIZED FOR CONSTRUCTION

Electronic Approval: This approval is being issued electronically. This approval is valid only upon the signature of a City of Raleigh Review Officer below. The City will retain a copy of the approved plans. Any work authorized by this approval must proceed in accordance with the plans kept on file with the City. This electronic approval may not be edited once issued. Any modification to this approval once issued will invalidate this approval.

City of Raleigh Development Approval _____

Raleigh Water Review Officer

North Carolina 811 Call Before You Dig

*** 3 Days Before Digging ***
North Carolina 811
811 or 1-800-632-4949
Remote Ticket Entry
http://nc811.org/remoteticketentry.htm

December 2, 2024

Z:\Jobs\21-002 Moody Development Trust (R212002)\Dwg_Working Dwgs\Construction Set\D01 Project Details.dwg

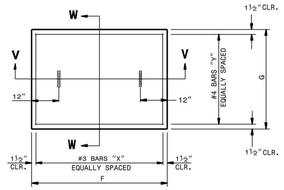

PLAN

PRECAST OR CAST IN PLACE TOP SLAB

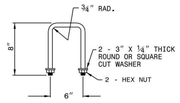

DETAIL OF HANDLE

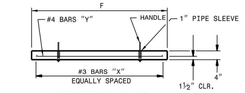

SECTION V-V

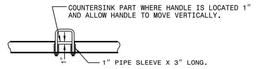

PART SECTION

THRU COVER SHOWING HANDLE

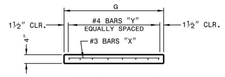

SECTION W-W

DOWEL

STATE OF NORTH CAROLINA
DEPT. OF TRANSPORTATION
DIVISION OF HIGHWAYS
RALEIGH, N.C.

1-18

ROADWAY STANDARD DRAWING FOR
CONCRETE OPEN THROAT CATCH BASIN
12" THRU 48" PIPE

SHEET 2 OF 2

840.04

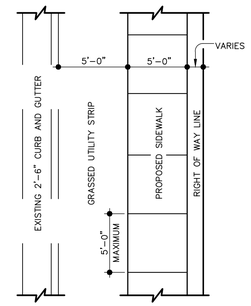

PLAN VIEW

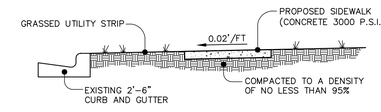

TYPICAL SECTION

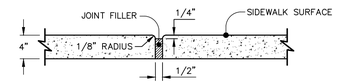

TRANSVERSE EXPANSION JOINT

NOTES:

1. TRANSVERSE EXPANSION JOINTS TO BE A MAXIMUM OF 50 FEET.
2. ALL CONCRETE TO BE FINISHED WITH CURING COMPOUND.
3. A 6 INCH DEPTH IS REQUIRED AT LOCATIONS OF DRIVEWAY CROSSINGS, AT STREET INTERSECTIONS (ALONG THE LENGTH OF RADIUS CURB RETURNS), AND IN THE HANDICAP RAMPS.

STANDARD CONCRETE SIDEWALK

DETAIL No. 03000.07
SHEET 1 OF 2

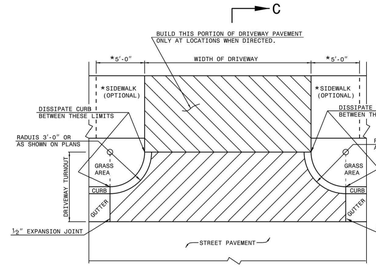

PLAN
DETAIL OF DRIVEWAY

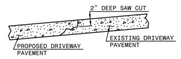

METHOD OF TIE IN

WHEN EXISTING DRIVEWAY PAVEMENT IS CONCRETE, SAW CUT 2" DEEP JOINT AT THE POINT OF TIE-IN. SAW JOINT PERPENDICULAR TO EDGE OF EXISTING DRIVEWAY PAVEMENT.

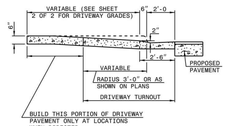

SECTION C-C

STATE OF NORTH CAROLINA
DEPT. OF TRANSPORTATION
DIVISION OF HIGHWAYS
RALEIGH, N.C.

1-18

ROADWAY STANDARD DRAWING FOR
DRIVEWAY TURNOUT
RADIUS TYPE

SHEET 1 OF 2

848.02

DESIRABLE DRIVEWAY GRADES

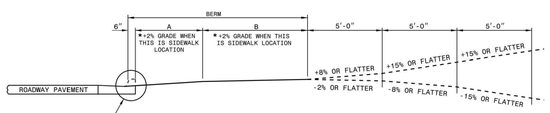

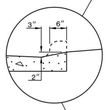

*SIDEWALK LOCATION (DO NOT PLACE SIDEWALK ON BERMS LESS THAN 6' WIDE.)

DESIRABLE OR MAXIMUM DRIVEWAY GRADES				
BERM WIDTH	A DIST.	A GRADE	B DIST.	B GRADE
8' OR LESS	5'-0"	+2%*	2'-6"	+5%
8' OR LESS	2'-0"	+6%	5'-6"	+2%*
10'	4'-0"	+4%	5'-6"	+2%*
12' & OVER	4'-6"	+4%	7'-0"	+2%*

MAXIMUM DRIVEWAY GRADES

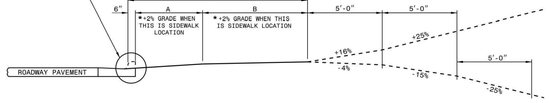

STATE OF NORTH CAROLINA
DEPT. OF TRANSPORTATION
DIVISION OF HIGHWAYS
RALEIGH, N.C.

1-18

ROADWAY STANDARD DRAWING FOR
DRIVEWAY TURNOUT
DRIVEWAY GRADES

SHEET 2 OF 2

848.02

STATE OF NORTH CAROLINA
DEPT. OF TRANSPORTATION
DIVISION OF HIGHWAYS
RALEIGH, N.C.

1-12

ENGLISH STANDARD DRAWING FOR
PAVEMENT MARKINGS
PEDESTRIAN CROSSWALKS

HI-VISIBILITY CROSSWALK

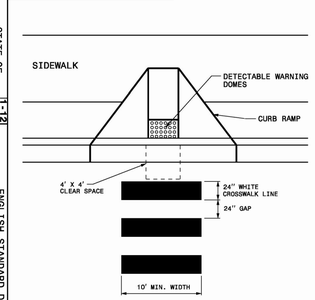

STANDARD CROSSWALK

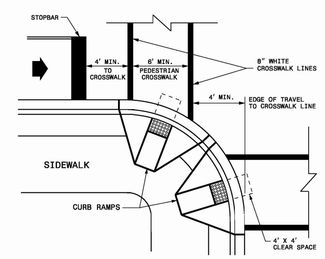

1- THE MINIMUM WIDTH OF STANDARD CROSSWALKS IS 6 FEET. THE MINIMUM WIDTH OF HI-VISIBILITY CROSSWALKS IS 10 FEET.

2- SET BACK DISTANCE FROM INSIDE CROSSWALK MARKING TO NEAREST EDGE OF TRAVEL IS 4' MIN.

3- BEYOND THE CURB FACE, A CLEAR SPACE OF 4' X 4' FEET MINIMUM SHALL BE PROVIDED WITHIN THE WIDTH OF THE CROSSWALK.

4- PLACE STOP BARS A MINIMUM OF 4 FEET FROM NEAREST CROSSWALK LINE. STOP BARS AT SIGNALIZED INTERSECTIONS SHOULD BE COORDINATED WITH THE SIGNAL DESIGN SECTION OR AS DIRECTED BY THE ENGINEER.

5- CURB RAMPS SHALL BE CONSTRUCTED IN ACCORDANCE TO THE LATEST NCDOT ROADWAY STANDARD DRAWINGS.

LEGEND

- DIRECTION OF TRAFFIC FLOW
- CURB RAMP WITH DETECTABLE WARNING DOMES

SHEET 1 OF 1

1205.07

ENGLISH STANDARD DRAWING FOR
PAVEMENT MARKINGS
PEDESTRIAN CROSSWALKS

SHEET 1 OF 1

1205.07

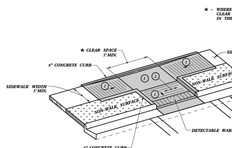

TYPE 3

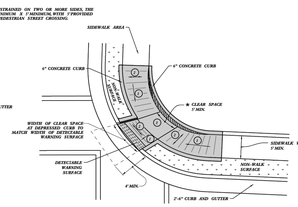

TYPE 3 MODIFIED
INSTALLATION IN A RADIUS

* - WHERE CLEAR SPACE IS CONSTRAINED ON TWO OR MORE SIDES, THE CLEAR SPACE SHALL BE 4'MINIMUM X 7'MINIMUM WITH 7'PROVIDED IN THE DIRECTION OF THE PEDESTRIAN STREET CROSSING.

NOTES:
DETECTABLE WARNING SURFACE SHALL COVER 2'-0" LENGTH AND FULL WIDTH OF THE RAMP FLOOR AS SHOWN ON THE DETAILS.
DETECTABLE WARNING SURFACE SHALL CONTRAST VISIBLY WITH ADJOINING SURFACE, EITHER LIGHT-ON-DARK, OR DARK-ON-LIGHT SEQUENCE COVERING THE ENTIRE RAMP.

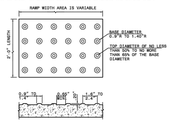

DETECTABLE WARNING SURFACE

8.33% (12:1) MAX RAMP SLOPE
CROSS SLOPE: 2.0%
MAXIMUM CROSS SLOPE AND LONGITUDINAL SLOPE OF 2.0%.

PAY LIMITS FOR 1 CURB RAMP

STATE OF NORTH CAROLINA
DEPT. OF TRANSPORTATION
DIVISION OF HIGHWAYS
RALEIGH, N.C.

1-23

ROADWAY STANDARD DRAWING FOR
CURB RAMP
PARALLEL RAMP

SHEET 9 OF 13

848.06

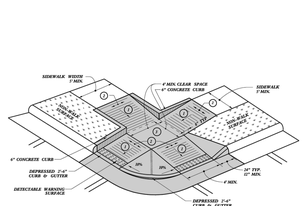

TYPE 5

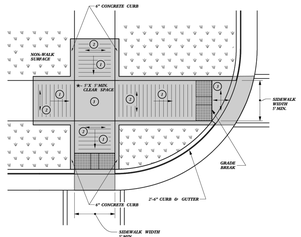

* - WHERE CLEAR SPACE IS CONSTRAINED ON TWO OR MORE SIDES, THE CLEAR SPACE SHALL BE 4'MINIMUM X 7'MINIMUM WITH 7'PROVIDED IN THE DIRECTION OF THE PEDESTRIAN STREET CROSSING.

TYPE 5A

8.33% (12:1) MAX RAMP SLOPE
CROSS SLOPE: 2.0%
MAXIMUM CROSS SLOPE AND LONGITUDINAL SLOPE OF 2.0%.

PAY LIMITS FOR 1 OR 2 CURB RAMPS (CALCULATE BASED ON NUMBER OF SETS OF DETECTABLE WARNING SURFACES)

NOTES:
DETECTABLE WARNING SURFACE SHALL COVER 2'-0" LENGTH AND FULL WIDTH OF THE RAMP FLOOR AS SHOWN ON THE DETAILS.
DETECTABLE WARNING SURFACE SHALL CONTRAST VISIBLY WITH ADJOINING SURFACE, EITHER LIGHT-ON-DARK, OR DARK-ON-LIGHT SEQUENCE COVERING THE ENTIRE RAMP.

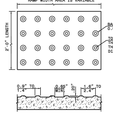

DETECTABLE WARNING SURFACE

STATE OF NORTH CAROLINA
DEPT. OF TRANSPORTATION
DIVISION OF HIGHWAYS
RALEIGH, N.C.

1-23

ROADWAY STANDARD DRAWING FOR
CURB RAMP
SHARED LANDING

SHEET 11 OF 13

848.06

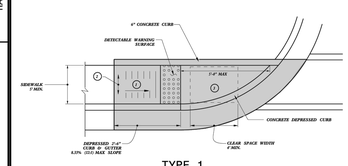

TYPE 1

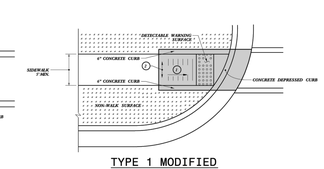

TYPE 1 MODIFIED

8.33% (12:1) MAX RAMP SLOPE
CROSS SLOPE: 2.0%
MAXIMUM CROSS SLOPE AND LONGITUDINAL SLOPE OF 2.0%.

NOTES:
DETECTABLE WARNING SURFACE SHALL COVER 2'-0" LENGTH AND FULL WIDTH OF THE RAMP FLOOR AS SHOWN ON THE DETAILS.
DETECTABLE WARNING SURFACE SHALL CONTRAST VISIBLY WITH ADJOINING SURFACE, EITHER LIGHT-ON-DARK, OR DARK-ON-LIGHT SEQUENCE COVERING THE ENTIRE RAMP.

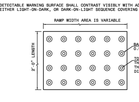

DETECTABLE WARNING SURFACE

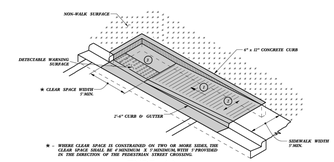

* - WHERE CLEAR SPACE IS CONSTRAINED ON TWO OR MORE SIDES, THE CLEAR SPACE SHALL BE 4'MINIMUM X 7'MINIMUM WITH 7'PROVIDED IN THE DIRECTION OF THE PEDESTRIAN STREET CROSSING.

TYPE 1A

PAY LIMITS FOR 1 CURB RAMP

STATE OF NORTH CAROLINA
DEPT. OF TRANSPORTATION
DIVISION OF HIGHWAYS
RALEIGH, N.C.

1-23

ROADWAY STANDARD DRAWING FOR
CURB RAMP
DIRECTIONAL RAMP

SHEET 6 OF 13

848.06

CITY OF RALEIGH - PLANS AUTHORIZED FOR CONSTRUCTION

Electronic Approval: This approval is being issued electronically. This approval is valid only upon the signature of a City of Raleigh Review Officer below. The City will retain a copy of the approved plans. Any work authorized by this approval must proceed in accordance with the plans kept on file with the City. This electronic approval may not be edited once issued. Any modification to this approval once issued will invalidate this approval.

City of Raleigh Development Approval _____

Raleigh Water Review Officer

North Carolina 811
*** 3 Days Before Digging ***
North Carolina 811
811 or 1-800-632-4949
Remote Ticket Entry
http://nc811.org/remoteticketentry.htm

AMERICAN Engineering
American Engineering Associates - Southeast, P.A.
4020 Westchase Boulevard, Suite 450
Raleigh, NC 27607
919-469-1101

NORTH CAROLINA
AMERICAN ENGINEERING ASSOCIATES SOUTHEAST
C-3881
CERTIFICATE OF AUTHORIZATION

PRELIMINARY
NOT FOR CONSTRUCTION
Digitally signed by JOSHUA P. KLEE
Date: 2025.02.05 16:52:02 -05'00'

NO.	DATE	REVISION:

STIPULATION FOR REUSE

THIS DRAWING WAS PREPARED FOR USE ON THE SPECIFIC SITE, NAMED HEREON, CONTEMPORANEOUSLY WITH ITS ISSUE DATE AS LISTED, HEREON, AND IT IS NOT SUITABLE FOR USE ON A DIFFERENT PROJECT SITE OR AT A LATER TIME. USE OF THIS DRAWING FOR REFERENCE OR EXAMPLE ON ANOTHER PROJECT REQUIRES THE SERVICES OF PROPERLY LICENSED ARCHITECTS AND ENGINEERS. REPRODUCTION OF THIS DRAWING FOR REUSE ON ANOTHER PROJECT IS NOT AUTHORIZED AND MAY BE CONTRARY TO THE LAW.

THE PRESERVE AT MOODY FARM

ROLESVILLE ROAD
WAKE COUNTY, NC

JOB NUMBER: 21-002
CHECKED BY: JK
DRAWN BY: RC & SM
DATE: 12/02/2024

SHEET TITLE:
SITE DETAILS

SHEET NO.:
CD15

Z:\Jobs\21-002 Moody Development Trust P2210003\dwg_Working Dwgs\Construction Set\CD1 Project Details.dwg
December 2, 2024

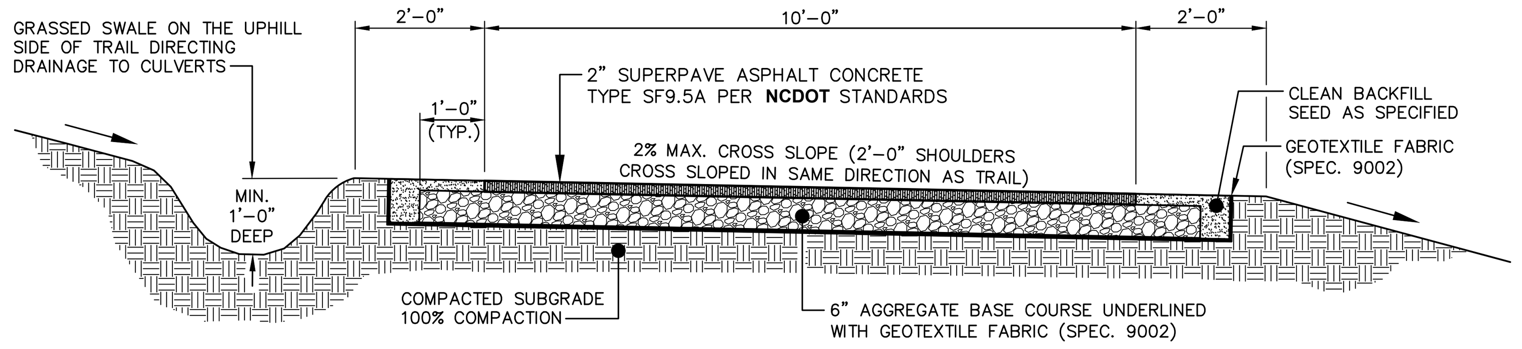

NOTES:
1. CONTRACTOR IS RESPONSIBLE FOR RE-ESTABLISHING ALL SLOPES DISTURBED BY CONSTRUCTION.
2. NO ABOVE GROUND UTILITIES OR UTILITY SURFACE COVERS/PLATES/MANHOLES SHALL BE LOCATED WITHIN TRAIL AND SHALL BE MINIMUM 2 FEET FROM THE EDGE OF TRAIL. RAISED MANHOLES SHALL BE MINIMUM 4 FEET FROM TRAIL EDGE.
3. ALL TRAILS SHALL BE LOCATED MINIMUM 5 FEET FROM THE BACK OF CURB.
4. SIDE SLOPES SHALL NOT EXCEED 3:1. CUT & FILL SLOPES SHALL TIE INTO EXISTING SLOPES TO CREATE AN EVEN TRANSITION.
5. CROSS SLOPE TYPICALLY TO LOW SIDE BUT CROSS SLOPE TO INSIDE OF DOWNHILL CURVES, WITH GRADUAL TRANSITIONS BETWEEN ANY CROSS SLOPE DIRECTION CHANGES.

STANDARD 10-FT/STREET-SIDE TRAIL ASPHALT GREENWAY TRAIL

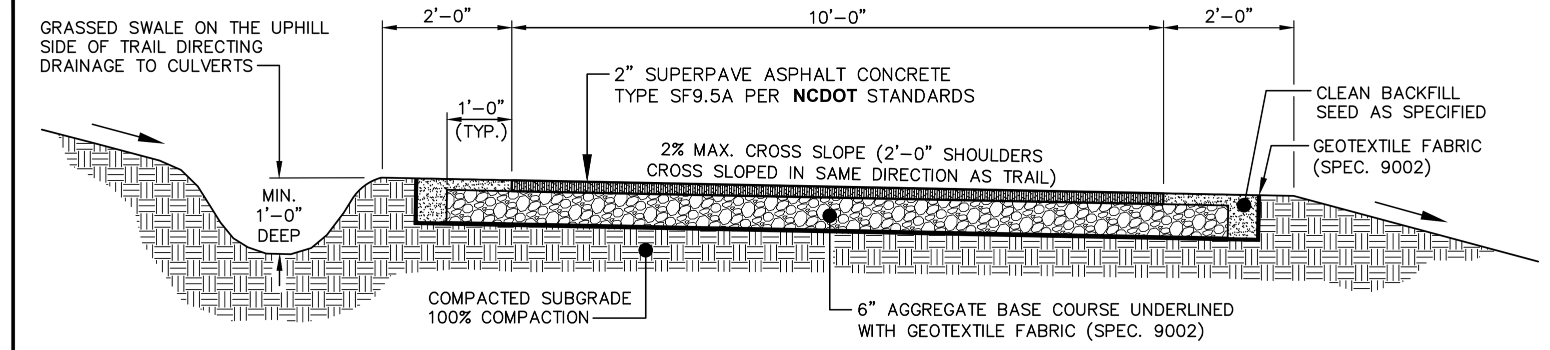

NOTES:
1. CONTRACTOR IS RESPONSIBLE FOR RE-ESTABLISHING ALL SLOPES DISTURBED BY CONSTRUCTION.
2. NO ABOVE GROUND UTILITIES OR UTILITY SURFACE COVERS/PLATES/MANHOLES SHALL BE LOCATED WITHIN TRAIL AND SHALL BE MINIMUM 2 FEET FROM THE EDGE OF TRAIL. RAISED MANHOLES SHALL BE MINIMUM 4 FEET FROM TRAIL EDGE.
3. ALL TRAILS SHALL BE LOCATED MINIMUM 5 FEET FROM THE BACK OF CURB.
4. SIDE SLOPES SHALL NOT EXCEED 3:1. CUT & FILL SLOPES SHALL TIE INTO EXISTING SLOPES TO CREATE AN EVEN TRANSITION.
5. CROSS SLOPE TYPICALLY TO LOW SIDE BUT CROSS SLOPE TO INSIDE OF DOWNHILL CURVES, WITH GRADUAL TRANSITIONS BETWEEN ANY CROSS SLOPE DIRECTION CHANGES.

STANDARD 10-FT GREENWAY TRAIL

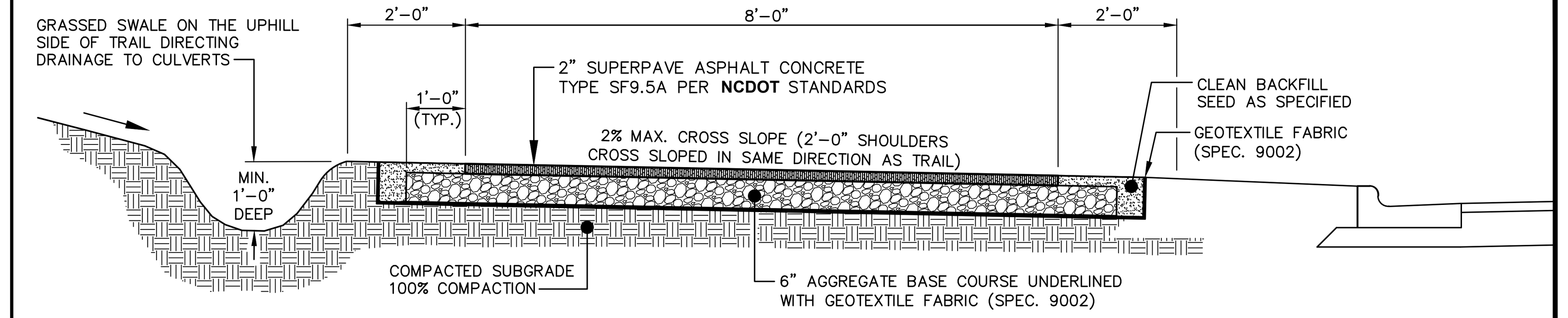

NOTES:
1. CONTRACTOR IS RESPONSIBLE FOR RE-ESTABLISHING ALL SLOPES DISTURBED BY CONSTRUCTION.
2. NO ABOVE GROUND UTILITIES OR UTILITY SURFACE COVERS/PLATES/MANHOLES SHALL BE LOCATED WITHIN TRAIL AND SHALL BE MINIMUM 2 FEET FROM THE EDGE OF TRAIL. RAISED MANHOLES SHALL BE MINIMUM 4 FEET FROM TRAIL EDGE.
3. ALL TRAILS SHALL BE LOCATED MINIMUM 5 FEET FROM THE BACK OF CURB.
4. SIDE SLOPES SHALL NOT EXCEED 3:1. CUT & FILL SLOPES SHALL TIE INTO EXISTING SLOPES TO CREATE AN EVEN TRANSITION.
5. CROSS SLOPE TYPICALLY TO LOW SIDE BUT CROSS SLOPE TO INSIDE OF DOWNHILL CURVES, WITH GRADUAL TRANSITIONS BETWEEN ANY CROSS SLOPE DIRECTION CHANGES.

STANDARD 8-FT ROADWAY TRAIL

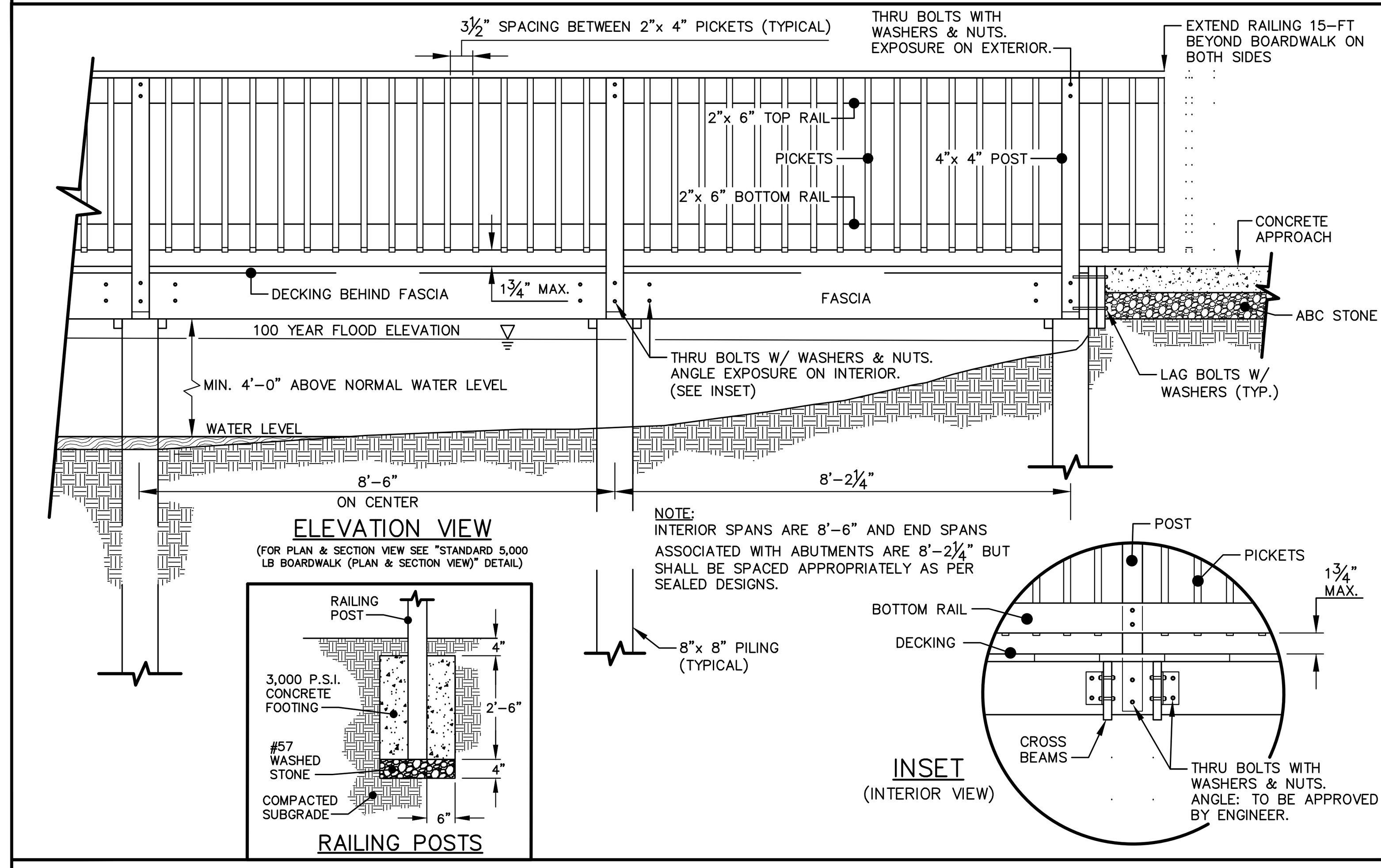

STANDARD BOARDWALK (ELEVATION VIEW)

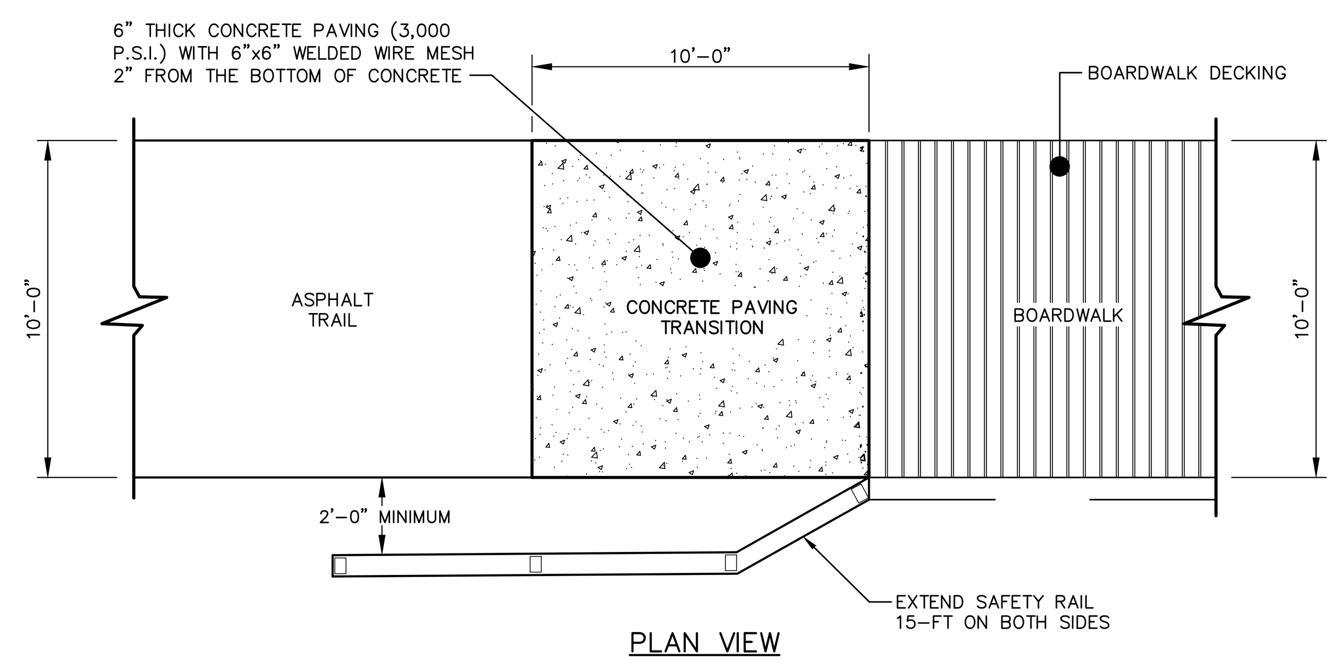

STANDARD 5,000 LB BOARDWALK APPROACH

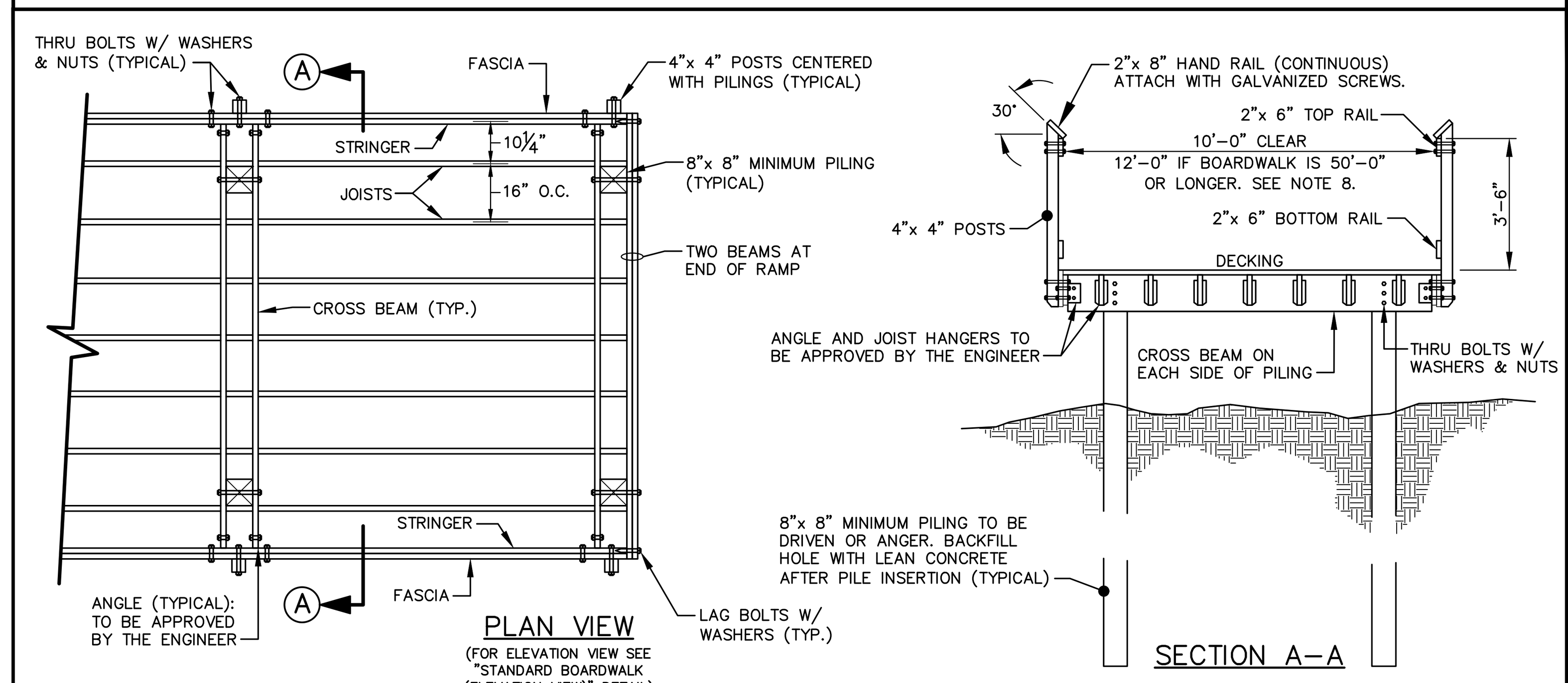

NOTES:
1. MINIMUM PILE PENETRATION FOR PIERS SHALL BE 10 FEET (OR APPROVED DEPTH BY GEOTECHNICAL ENGINEER).
2. SMALL MEMBERS SHALL HAVE PRE-DRILLED HOLES TO PREVENT SPLITTING DURING CONSTRUCTION. DECKING TO BE ATTACHED TO JOISTS USING GALVANIZED SCREWS & HARDWARE (ALL WOODEN MEMBERS SHALL BE BOLTED OR SCREWED TOGETHER. NO NAIL CONNECTIONS).
3. ALL BOLTS, NUTS, WASHERS, ETC. SHALL BE HOT DIPPED GALVANIZED AFTER FABRICATION IN ACCORDANCE WITH ASTM A153.
4. TIMBER BOARDWALK IS DESIGNED IN ACCORDANCE WITH AASHTO STANDARD SPECIFICATIONS FOR HIGHWAY BRIDGES (17 EDITION – 2002). DESIGN LIVE LOAD IS SMALL VEHICLE OF 5000 POUNDS, 2500 POUNDS PER AXLE WITH A MINIMUM 96 INCH WHEEL BASE.
5. SITE SOIL PROPERTIES ARE ASSUMED TO SUPPORT FOUNDATION LOADS. CONTRACTOR SHALL PROVIDE GEOTECHNICAL REPORT TO THE ENGINEER INDICATING THE SITE SOIL PROPERTIES THAT CAN SUPPORT FOUNDATION LOADS PRIOR TO BEGINNING CONSTRUCTION.
6. JOIST HANGER SHALL BE CAPABLE OF SUPPORTING A MINIMUM SAFE WORKING LOAD OF 3150 POUNDS AND SHALL BE GALVANIZED.
7. STRUCTURAL ENGINEER SHALL SIZE ALL LUMBER AND SPACING APPROPRIATELY TO MEET CAPACITY REQUIREMENTS, AND SHALL PROVIDE A SEALED CERTIFICATION TO TOWN THAT STRUCTURE WAS CONSTRUCTED IN ACCORDANCE WITH PLANS AND TOWN SPECIFICATIONS.
8. IF RUNNING SLOPE EXCEEDS 5%, HANDRAILS SHALL BE PROVIDED IN ACCORDANCE WITH **AASHTO/ADA** DESIGN REQUIREMENTS; 10 TO 12 FEET CLEARANCE, AS INDICATED IN SECTION A-A, SHALL BE BETWEEN HANDRAILS.

STANDARD 5,000 LB BOARDWALK (PLAN & SECTION VIEW)

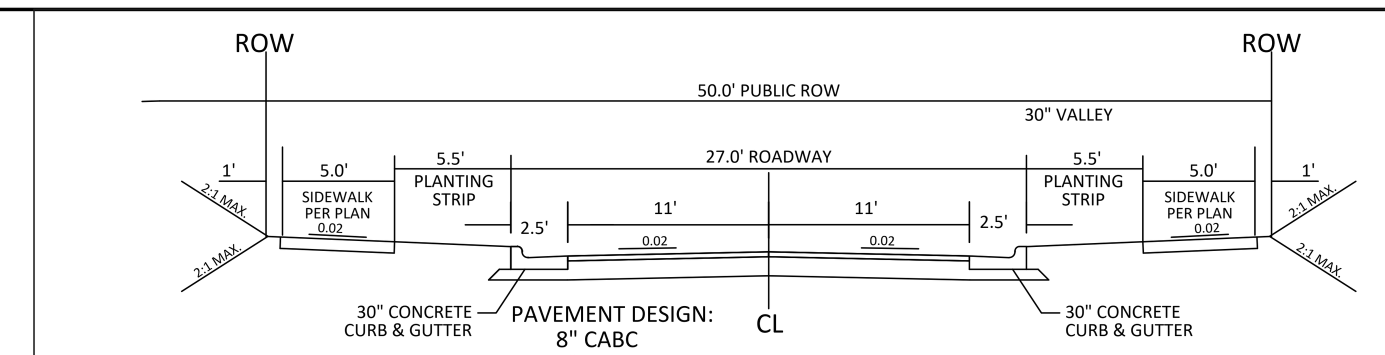

NOTE:
1. NORMAL CROWN OF 0.02 UNLESS OTHERWISE DIRECTED BY TOWN ENGINEER.
2. ASPHALT WILL BE INSTALLED AT A MIN. 1.5" LIFTS.

27' B-B ON A 50' R/W
TYPICAL SECTION

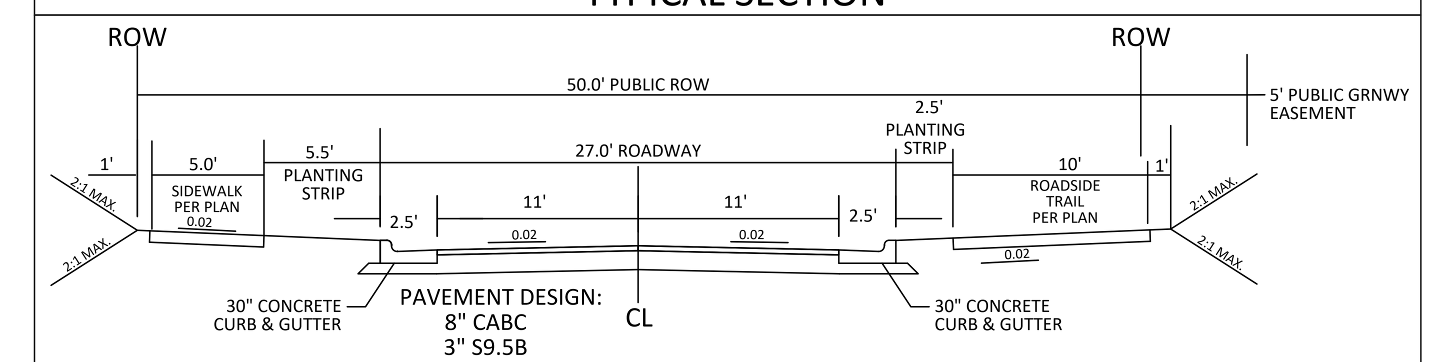

NOTE:
1. NORMAL CROWN OF 0.02 UNLESS OTHERWISE DIRECTED BY TOWN ENGINEER.
2. ASPHALT WILL BE INSTALLED AT A MIN. 1.5" LIFTS.

27' B-B ON A 50' R/W
TYPICAL SECTION

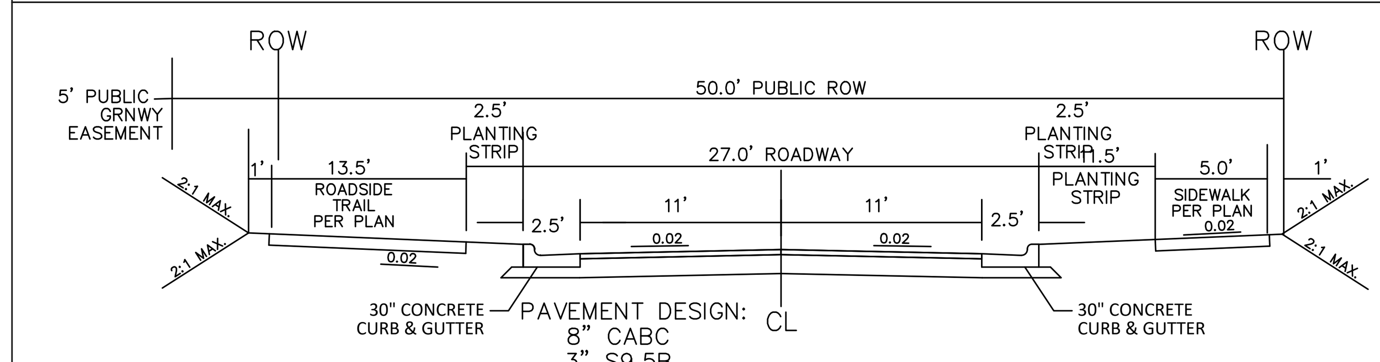

NOTE:
1. NORMAL CROWN OF 0.02 UNLESS OTHERWISE DIRECTED BY TOWN ENGINEER.
2. ASPHALT WILL BE INSTALLED AT A MIN. 1.5" LIFTS.

27' B-B ON A 50' R/W
TYPICAL SECTION

AMERICAN Engineering
American Engineering Associates - Southeast, P.A.
4020 Westchase Boulevard, Suite 450
Raleigh, NC 27607
919-469-1101

NORTH CAROLINA AMERICAN ENGINEERING ASSOCIATES SOUTHEAST C-3881 CERTIFICATE OF AUTHORIZATION

PRELIMINARY - DO NOT USE FOR CONSTRUCTION

NORTH CAROLINA PROFESSIONAL SEAL 56528 ENGINEER JAKOB P. KLEIN

Digitally signed by Jakob Klein Date: 2024.12.02 16:11:20 -05'00'

NO.	DATE	REVISION:

STIPULATION FOR REUSE
THIS DRAWING WAS PREPARED FOR USE ON THE SPECIFIC SITE, NAMED HEREON, CONTEMPORANEOUSLY WITH ITS ISSUE DATE AS LISTED, HEREON. AND IT IS NOT SUITABLE FOR USE ON A DIFFERENT PROJECT SITE OR AT A LATER TIME. USE OF THIS DRAWING FOR REFERENCE OR EXAMPLE ON ANOTHER PROJECT REQUIRES THE SERVICES OF PROPERLY LICENSED ARCHITECTS AND ENGINEERS. REPRODUCTION OF THIS DRAWING FOR REUSE ON ANOTHER PROJECT IS NOT AUTHORIZED AND MAY BE CONTRARY TO THE LAW.

THE PRESERVE AT MOODY FARM
ROLESVILLE ROAD
WAKE COUNTY, NC

JOB NUMBER: 21-002
CHECKED BY: JK
DRAWN BY: RC & SM
DATE: 12/02/2024

SHEET TITLE:
SITE DETAILS

SHEET NO.:
CD16

CITY OF RALEIGH - PLANS AUTHORIZED FOR CONSTRUCTION

Electronic Approval: This approval is being issued electronically. This approval is valid only upon the signature of a City of Raleigh Review Officer below. The City will retain a copy of the approved plans. Any work authorized by this approval must proceed in accordance with the plans kept on file with the City. This electronic approval may not be edited once issued. Any modification to this approval once issued will invalidate this approval.

City of Raleigh Development Approval ____________________

Raleigh Water Review Officer

North Carolina 811
www.nc811.org
*** 3 Days Before Digging ***
North Carolina 811
811 or 1-800-632-4949
Remote Ticket Entry
http://nc811.org/remoteticketentry.htm

December 2, 2024

Z:\Jobs\21-002 Moody Development Tract (R210002)\dwg_Working Dwgs\Construction Set\CD1 Project Details.dwg

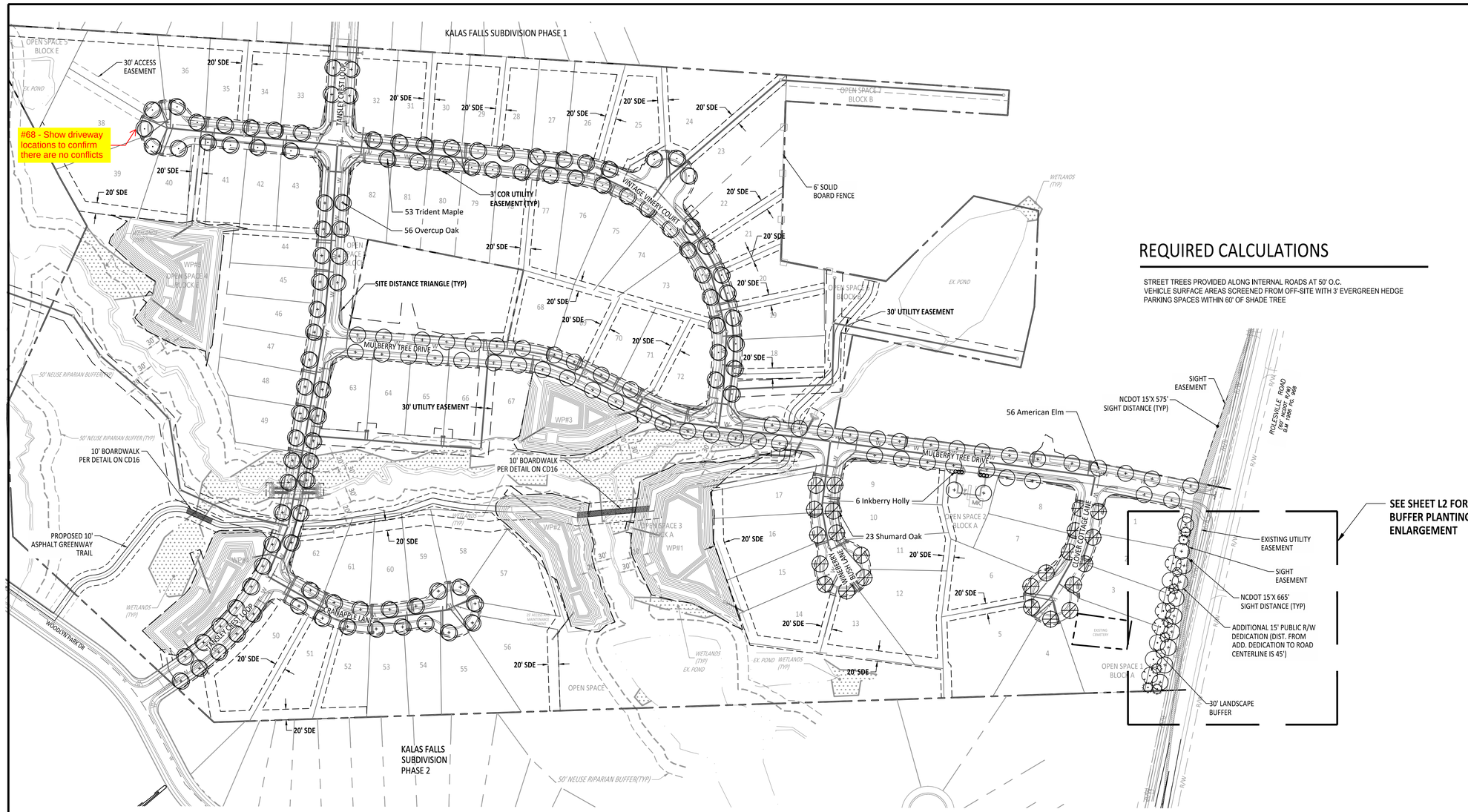

REQUIRED CALCULATIONS

STREET TREES PROVIDED ALONG INTERNAL ROADS AT 50' O.C.
VEHICLE SURFACE AREAS SCREENED FROM OFF-SITE WITH 3' EVERGREEN HEDGE
PARKING SPACES WITHIN 60' OF SHADE TREE

PLANT SCHEDULE

KEY	QUAN.	BOTANICAL NAME	COMMON NAME	SIZE	CONT.	NOTES
		TREES				
	4	Ginkgo biloba 'Goldspire'	Goldspire Ginkgo	2.5" Cal., 8' Ht.	B & B	Large mature tree
	4	Juniperus virginiana	Eastern Red Cedar	1.5" Cal., 6' Ht.	B & B	Evergreen tree
	4	Nyssa sylvatica 'Green Gable'	Green Gable Blackgum	1.5" Cal., 6' Ht.	B & B	Small mature tree
	23	Quercus shumardii	Shumard Oak	2.5" Cal., 8' Ht.	B & B	Large mature tree
	56	Quercus lyrata	Overcup Oak	2.5" Cal., 8' Ht.	B & B	Large mature tree
	8	Thuja occidentalis 'Emerald Green'	Emerald Green Arbovitae	1.5" Cal., 6' Ht.	B & B	Evergreen tree
	66	Ulmus americana	American Elm	2.5" Cal., 8' Ht.	B & B	Large mature tree
	53	Acer buergerianum	Trident Maple	2.5" Cal., 8' Ht.	B & B	Large mature tree
		SHRUBS				
	6	Ilex glabra	Inkberry Holly	#3 Gallon	Cont.	Evergreen shrub

GRAPHIC SCALE

100 0 50 100 200 400

(IN FEET)
1 inch =100

CITY OF RALEIGH - PLANS AUTHORIZED FOR CONSTRUCTION

Electronic Approval: This approval is being issued electronically. This approval is valid only upon the signature of a City of Raleigh Review Officer below. The City will retain a copy of the approved plans. Any work authorized by this approval must proceed in accordance with the plans kept on file with the City. This electronic approval may not be edited once issued. Any modification to this approval once issued will invalidate this approval.

City of Raleigh Development Approval _____

Raleigh Water Review Officer

North Carolina 811 Call before you dig.
*** 3 Days Before Digging ***
North Carolina 811
811 or 1-800-632-4949
Remote Ticket Entry
http://nc811.org/remoteticketentry.htm

AMERICAN Engineering
American Engineering Associates - Southeast, P.A.
4020 Westchase Boulevard, Suite 450
Raleigh, NC 27607
919-469-1101

NORTH CAROLINA ARCHITECTURAL SERVICES C-652

NORTH CAROLINA PROFESSIONAL SEAL 1816 LANDSCAPE ARCHITECT LAUREN E. DRAKE

PRELIMINARY - DO NOT USE FOR CONSTRUCTION

NO.	DATE	REVISION:

STIPULATION FOR REUSE

THIS DRAWING WAS PREPARED FOR USE ON THE SPECIFIC SITE, NAMED HEREON, CONTEMPORANEOUSLY WITH ITS ISSUE DATE AS LISTED, HEREON. AND IT IS NOT SUITABLE FOR USE ON A DIFFERENT PROJECT SITE OR AT A LATER TIME. USE OF THIS DRAWING FOR REFERENCE OR EXAMPLE ON ANOTHER PROJECT REQUIRES THE SERVICES OF PROPERLY LICENSED ARCHITECTS AND ENGINEERS. REPRODUCTION OF THIS DRAWING FOR REUSE ON ANOTHER PROJECT IS NOT AUTHORIZED AND MAY BE CONTRARY TO THE LAW.

THE PRESERVE AT MOODY FARM
ROLESVILLE ROAD
WAKE COUNTY, NC

JOB NUMBER: 21-002
CHECKED BY: JK
DRAWN BY: RC & SM
DATE: 12/02/2024

SHEET TITLE:
LANDSCAPE PLAN

SHEET NO.:
L1

December 2, 2024

Z:\Jobs\21-002 Moody Development Tract (R21000010)\dwg_Working Dwgs\Construction Set\13.0-Landscape Plan.dwg

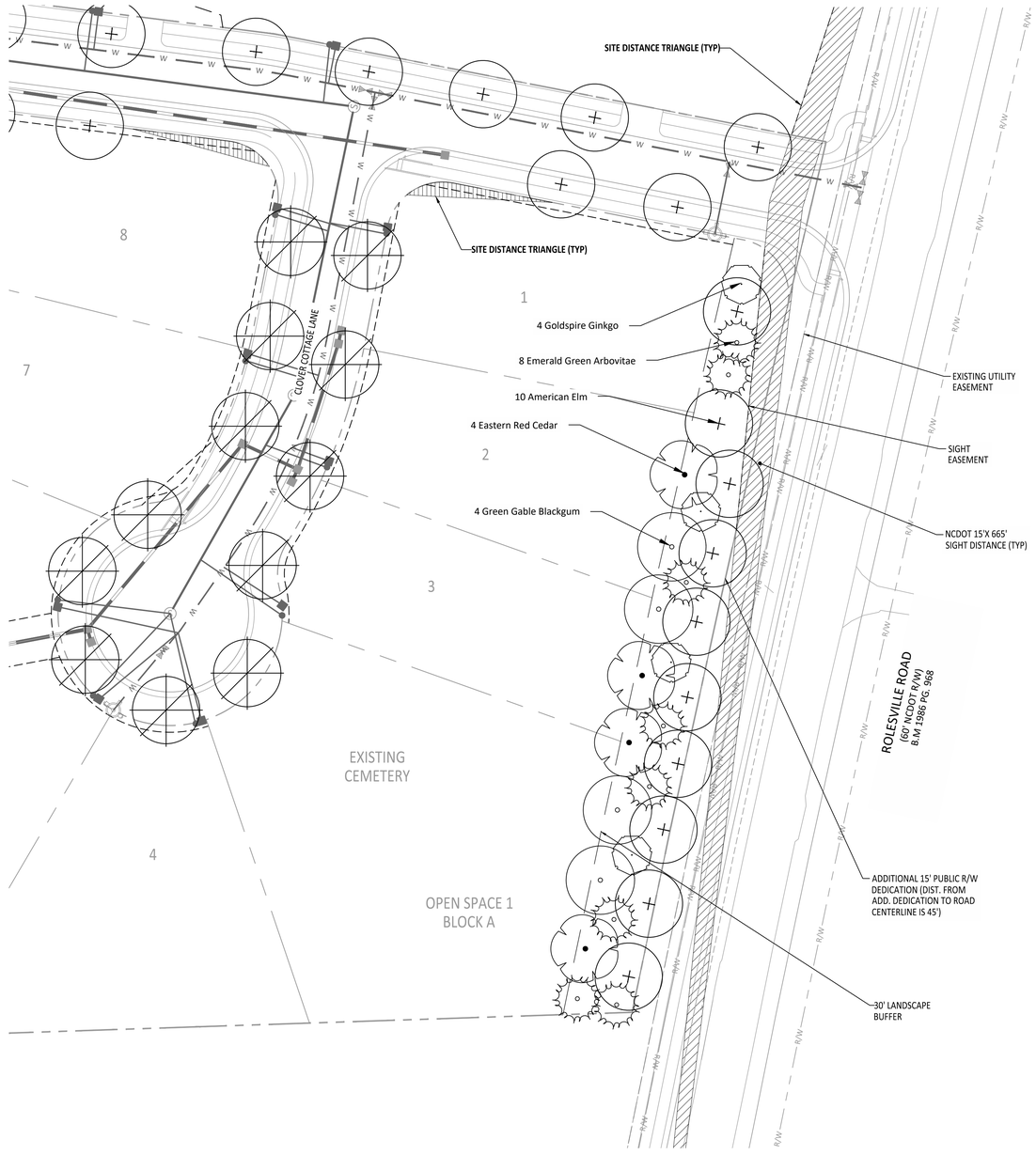

GRAPHIC SCALE

30 0 15 30 60 120

(IN FEET)
1 inch = 30

REQUIRED CALCULATIONS

STREET BUFFER ALONG ROLESVILLE ROAD: (387.504 LF)
PER UDO SECTION 14.4
REQUIRED: 30' WIDTH FROM ROW LINE
PER 40 LF: 1 STREET TREE AND 2 UNDERSTORY ORNAMENTAL TREES
REQUIRED PLANTINGS: 10 STREET TREES, 20 UNDERSTORY ORNAMENTAL TREES
PROVIDED: 10 STREET TREES, 20 UNDERSTORY ORNAMENTAL TREES

CITY OF RALEIGH - PLANS AUTHORIZED FOR CONSTRUCTION

Electronic Approval: This approval is being issued electronically. This approval is valid only upon the signature of a City of Raleigh Review Officer below. The City will retain a copy of the approved plans. Any work authorized by this approval must proceed in accordance with the plans kept on file with the City. This electronic approval may not be edited once issued. Any modification to this approval once issued will invalidate this approval.

City of Raleigh Development Approval _____

Raleigh Water Review Officer

North Carolina 811 Call 811 Before You Dig

*** 3 Days Before Digging ***
North Carolina 811
811 or 1-800-632-4949
Remote Ticket Entry
http://nc811.org/remoteticketentry.htm

AMERICAN Engineering
American Engineering Associates - Southeast, P.A.
4020 Westchase Boulevard, Suite 450
Raleigh, NC 27607
919-469-1101

NORTH CAROLINA C-652 AMERICAN EA SERVICES

NORTH CAROLINA 1816 LAUREN E. DIERKER 2024-12-05 08:05:00

PRELIMINARY - DO NOT USE FOR CONSTRUCTION

NO.	DATE	REVISION:

STIPULATION FOR REUSE

THIS DRAWING WAS PREPARED FOR USE ON THE SPECIFIC SITE, NAMED HEREON, CONTEMPORANEOUSLY WITH ITS ISSUE DATE AS LISTED, HEREON, AND IT IS NOT SUITABLE FOR USE ON A DIFFERENT PROJECT SITE OR AT A LATER TIME. USE OF THIS DRAWING FOR REFERENCE OR EXAMPLE ON ANOTHER PROJECT REQUIRES THE SERVICES OF PROPERLY LICENSED ARCHITECTS AND ENGINEERS. REPRODUCTION OF THIS DRAWING FOR REUSE ON ANOTHER PROJECT IS NOT AUTHORIZED AND MAY BE CONTRARY TO THE LAW.

THE PRESERVE AT MOODY FARM

ROLESVILLE ROAD
WAKE COUNTY, NC

JOB NUMBER: 21-002
CHECKED BY: JK
DRAWN BY: RC & SM
DATE: 12/02/2024

SHEET TITLE:

BUFFER PLAN

SHEET NO.:

L2

Z:\Jobs\21-002 Moody Development Tract (R21000316ea)_Working Dwgs\Construction Set\L13 0-Landscape Plan.dwg
December 2, 2024

PLANT DETAILS

NOTES

1. REMOVE WIRE AND NYLON TWINE FROM BALL AND CANOPY.
2. SOAK ROOT BALL AND PLANT PIT IMMEDIATELY AFTER INSTALLATION.
3. DO NOT STAKE OR WRAP TRUNK UNLESS:
   3.1. TREE HAS A LARGE CROWN
   3.2. PLANTING SITE IS CONSISTENTLY WINDY OR IS A STEEP SLOPE
   3.3. PLANTING SITE IS SUSCEPTIBLE TO VANDALISM.
4. REMOVE ALL TAGS AND LABELS FROM PLANT MATERIAL.
5. PRUNE DEAD, BROKEN, RUBBING OR CROSSING BRANCHES, AND ANY SUCKERS AFTER PLANTING. DO NOT TOP TREES.

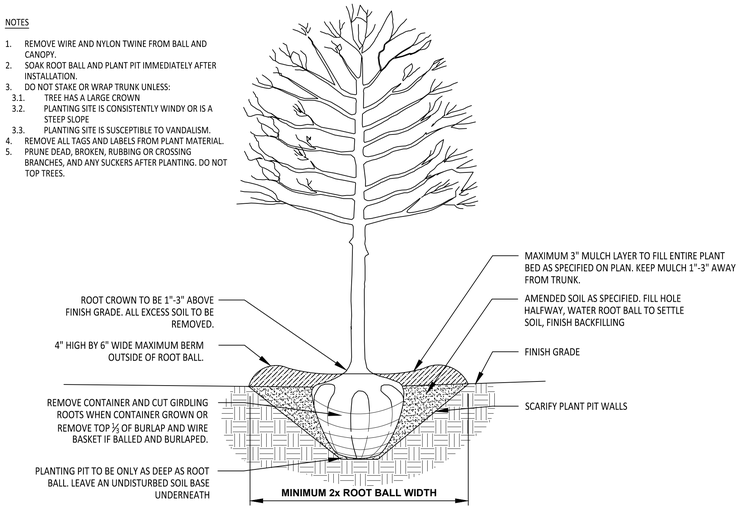

ALL TREES SHALL MEET AMERICAN STANDARD FOR NURSERY STOCK (ANSI Z60.1-2004)

FOR EXAMPLE:	CALIPER	HEIGHT (RANGE)	MAX. HEIGHT	MIN. ROOT BALL DIA.	MIN. ROOT BALL DEPTH
	2"	12'-14'	16'	24"	16"
	3"	14'-16'	18'	32"	21"

TYPICAL TREE PLANTING

(FOR SINGLE AND MULTI-STEM TREES)

NOT TO SCALE

NOTES:

1. SCARIFY ROOT MASS OF CONTAINERIZED PLANTS.
2. PLANT ROOT BALL SHOULD BE INSTALLED 1"-3" MAXIMUM ABOVE FINISHED GRADE.
3. WATER EACH PLANT IMMEDIATELY AFTER INSTALLATION AND BEFORE INSTALLATION OF MULCH.

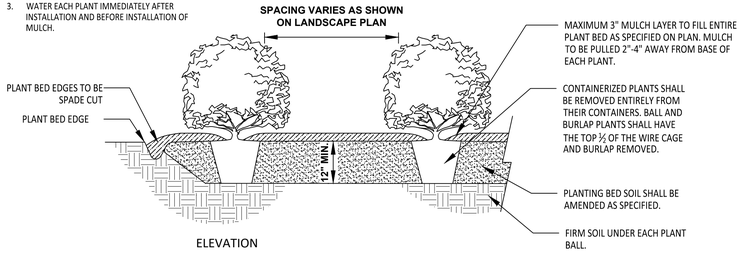

ELEVATION

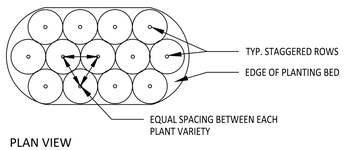

PLAN VIEW

TYPICAL SHRUB PLANTING

NOT TO SCALE

PLANT NOTES

PLANT INSTALLATION & MAINTENANCE NOTES:

1. ALL LANDSCAPING SHALL BE OF NURSERY STOCK QUALITY AND SHALL BE INSTALLED TO ACCEPTED NC LANDSCAPE CONTRACTOR STANDARDS.
2. ALL LANDSCAPING SHALL BE ADAPTABLE TO CLIMATIC CONDITIONS OF THE AREA.
3. LARGE TREES SHOULD NOT BE PLANTED WITHIN EASEMENTS AND A MINIMUM OF 6' FROM UTILITY LINES, UNLESS OTHERWISE SPECIFIED BY REVIEWING AGENCY. SHRUBS MAY BE PLANTED IN EASEMENTS, BUT A MINIMUM OF 3' FROM UTILITY LINES, UNLESS OTHERWISE SPECIFIED BY REVIEWING AGENCY.
4. ALL LANDSCAPING SHALL BE MAINTAINED IN GOOD CONDITION.
5. ALL LANDSCAPING SHALL AT ALL TIMES PRESENT A HEALTHY, NEAT, CLEAN, ORDERLY, DISEASE-FREE AND PEST-FREE APPEARANCE.
6. ALL LANDSCAPING SOIL AND FILL SHALL BE FREE FROM WEEDS, REFUSE, AND DEBRIS AT ALL TIMES.
7. EXCESS SOIL SHALL BE DISPOSED OF IN A LEGAL MANNER.
8. ANY DEAD PLANT MATERIAL OR MATERIAL THAT FAILS TO SHOW HEALTHY GROWTH MUST BE REMOVED WITHIN 30 DAYS.
9. REPLACEMENT OF REMOVED PLANT MATERIAL MUST TAKE PLACE WITHIN 90 DAYS OF REMOVAL OR NOTIFICATION BY THE TOWN, WHICHEVER OCCURS FIRST.
10. ANY REPLACEMENT PLANT MATERIAL MUST MEET THE SIZE AND OTHER CHARACTERISTICS OF NEWLY PLANTED MATERIAL.
11. IF USING STAKES AND GUYS SUCH SUPPORTS SHALL BE DESIGNED SO AS TO PROTECT TREES AND SHRUBS FROM INJURY. TREES AND SHRUBS SHALL BE FASTENED TO THE SUPPORT WITH AN ACCEPTABLE COMMERCIAL TREE TIE OF PLASTIC OR HOSE-COVERED WIRE. AFTER THE WARRANTY PERIOD HAS ENDED, STAKES AND GUYS SHALL BE REMOVED.
12. CONTRACTOR IS RESPONSIBLE TO CONTACT MISS UTILITIES (811) 48 HOURS PRIOR TO COMMENCEMENT OF WORK. CONTACT LANDSCAPE ARCHITECT IF FIELD CONFLICTS/DISCREPANCIES ARISE.
13. CONTRACTOR RESPONSIBLE TO VERIFY PLANT COUNTS. PLANTING PLAN SHALL GOVERN IN THE CASE OF A CONFLICT.
14. ALL PLANTS SHALL MEET OR EXCEED STANDARDS AS DETERMINED BY THE AMERICAN STANDARD OF NURSERY STOCK.
15. CONTRACTOR SHALL WARRANTY ALL PLANTS FOR A PERIOD OF ONE YEAR FROM DATE OF FINAL ACCEPTANCE.
16. WHEN POSSIBLE, PLANTING SHALL BE INSTALLED BETWEEN SEPTEMBER 1 - JUNE 30TH AND IN FAVORABLE WEATHER CONDITIONS. WHEN PLANTING MUST BE PERFORMED OUTSIDE OF SPECIFIED DATES, PLANTS MUST BE WATERED ON A REGULAR BASIS TO ENSURE VIABILITY.
17. PLANT VARIETIES, SIZES AND LAYOUT SHALL CONFORM ACCURATELY TO THE LANDSCAPE PLAN. CONTACT LANDSCAPE ARCHITECT FOR FIELD CONFLICTS.
18. DISTURBED AREAS SHALL BE SEEDED ACCORDING TO THE NOTES FOUND ON THIS PAGE.
19. PLANT SUBSTITUTIONS SHALL BE BROUGHT TO THE ATTENTION OF AND APPROVED BY LANDSCAPE ARCHITECT PRIOR TO INSTALLATION.
20. MULCH USED ON-SITE SHALL BE OF A NON-DYED, NATURAL HARDWOOD VARIETY TO BE INSTALLED AT A MAXIMUM DEPTH OF 3", MINIMUM DEPTH OF 2".

TOPSOIL / PLANTING MIX MINIMUM REQUIREMENTS:

1. TOPSOIL/PLANTING MIX SHOULD BE NATURAL, FERTILE, AGRICULTURAL SOIL CAPABLE OF SUSTAINING VIGOROUS PLANT GROWTH. IT SHOULD BE UNIFORM COMPOSITION THROUGHOUT, WITH ADMIXTURE OF SUBSOIL. IT SHOULD BE FREE OF STONES, LUMPS, LIVE PLANTS AND THEIR ROOTS, STICKS AND OTHER EXTRANEOUS MATTER. TOPSOIL SHOULD NOT BE USED WHILE IN A FROZEN OR MUDDY CONDITION.
2. TOPSOIL/PLANTING MIX SHALL HAVE AN ACIDITY RANGE OF PH 5.5-7.0 AND THE FOLLOWING COMPOSITION:

CLAY (RED CLAY, WELL PULVERIZED)	MINIMUM 10%; MAXIMUM 35%
COMPOST*/ORGANIC	MINIMUM 5%; MAXIMUM 10%
SILT	MINIMUM 30%; MAXIMUM 50%
COARSE SAND (FREE OF ROCKS, 0.5 TO 1.0 MM F)	MINIMUM 30%; MAXIMUM 45%

3. ORGANIC MATERIAL SUCH AS SAWDUST OR LEAF MOLD THAT HAS COMPLETED THE DECOMPOSITION PROCESS
4. RECOMMENDATIONS:
5. ALL PLANTING AREAS SHOULD BE TESTED FOR PROPER DRAINAGE. DRAINAGE SHOULD BE CORRECTED AS NECESSARY TO INSURE PROPER TREE GROWTH AND SURVIVAL. THE FOLLOWING LEVEL OF NUTRIENT ELEMENTS IS RECOMMENDED FOR PROPER GROWTH:

CALCIUM	55 - 80%
MAGNESIUM	10 - 30%
POTASSIUM	5 - 8%

SEEDING SCHEDULE FOR LAWNS & SLOPES (MAXIMUM 3:1):

DATE	TYPE	PLANTING RATE
AUG 15 - NOV 1	TALL FESCUE	300 LBS/ACRE
NOV 1 - MAR 1	TALL FESCUE AND ABRUZZI RYE	300 LBS/ACRE OR ANNUAL RYE
MAR 1 - APR 15	TALL FESCUE OR HARD FESCUE	300 LBS/ACRE
MAR 1 - JUL 15	HULLED COMMON BERMUDA GRASS OR HYBRID BERMUDA GRASS OR CENTIPEDE GRASS OR ZOYSIA GRASS OR ST. AUGUSTINE GRASS	200 LBS/ACRE
APR 15 - JUN 30	WEEPING LOVE GRASS OR BAHIA GRASS	25 LBS/ACRE
JUL 1 - AUG 15	TALL FESCUE AND *** BROWNTOP MILLET *** OR SORGHUM-SUDAN HYBRIDS	120 LBS/ACRE 35 LBS/ACRE 30 LBS/ACRE

CITY OF RALEIGH - PLANS AUTHORIZED FOR CONSTRUCTION

Electronic Approval: This approval is being issued electronically. This approval is valid only upon the signature of a City of Raleigh Review Officer below. The City will retain a copy of the approved plans. Any work authorized by this approval must proceed in accordance with the plans kept on file with the City. This electronic approval may not be edited once issued. Any modification to this approval once issued will invalidate this approval.

City of Raleigh Development Approval _____

Raleigh Water Review Officer

North Carolina 811 — 3 Days Before Digging

*** 3 Days Before Digging ***
North Carolina 811
811 or 1-800-632-4949
Remote Ticket Entry
http://nc811.org/remoteticketentry.htm

AMERICAN Engineering
American Engineering Associates - Southeast, P.A.
4020 Westchase Boulevard, Suite 450
Raleigh, NC 27607
919-469-1101

NORTH CAROLINA PROFESSIONAL ENGINEERING ARCHITECTURAL SERVICES C-652

NORTH CAROLINA PROFESSIONAL SEAL 018165 ENGINEER LAWRENCE E. MOORE III

PRELIMINARY - DO NOT USE FOR CONSTRUCTION

2024-12-09 05:12:22-05'00'

NO.	DATE	REVISION:

STIPULATION FOR REUSE

THIS DRAWING WAS PREPARED FOR USE ON THE SPECIFIC SITE, NAMED HEREON, CONTEMPORANEOUSLY WITH ITS ISSUE DATE AS LISTED, HEREON. AND IT IS NOT SUITABLE FOR USE ON A DIFFERENT PROJECT SITE OR AT A LATER TIME. USE OF THIS DRAWING FOR REFERENCE OR EXAMPLE ON ANOTHER PROJECT REQUIRES THE SERVICES OF PROPERLY LICENSED ARCHITECTS AND ENGINEERS. REPRODUCTION OF THIS DRAWING FOR REUSE ON ANOTHER PROJECT IS NOT AUTHORIZED AND MAY BE CONTRARY TO THE LAW.

THE PRESERVE AT MOODY FARM

ROLESVILLE ROAD
WAKE COUNTY, NC

JOB NUMBER: 21-002
CHECKED BY: JK
DRAWN BY: RC & SM
DATE: 12/02/2024

SHEET TITLE:
PLANTING NOTES AND DETAILS

SHEET NO.:
L3

Z:\Jobs\21-002 Moody Development Tract\R210002\Dwg_Working Dwgs\Construction Set\L3.0 Landscape Plan.dwg
December 2, 2024