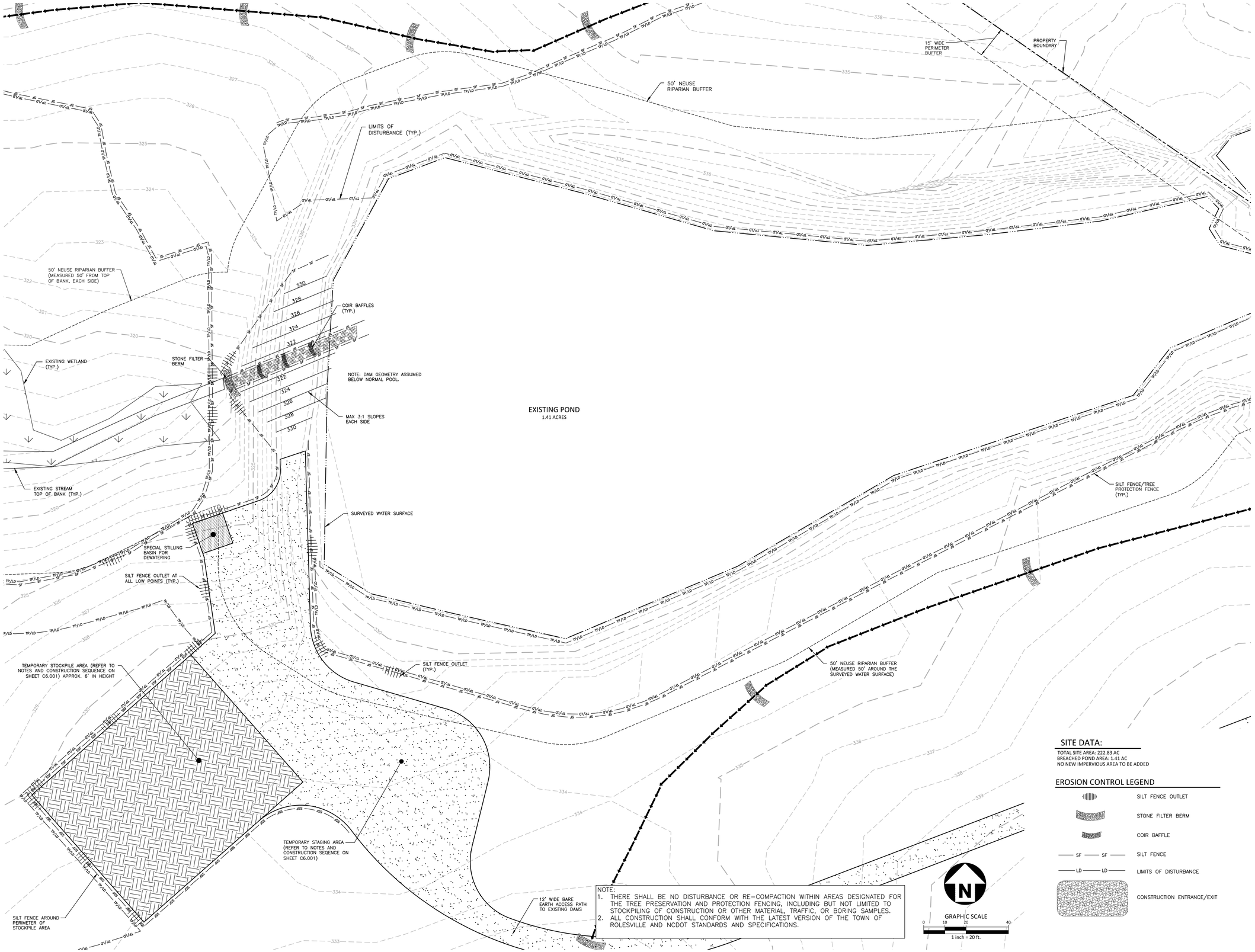

NOTE:
1. THERE SHALL BE NO DISTURBANCE OR RE-COMPACTION WITHIN AREAS DESIGNATED FOR THE TREE PRESERVATION AND PROTECTION FENCING, INCLUDING BUT NOT LIMITED TO STOCKPILING OF CONSTRUCTION OR OTHER MATERIAL, TRAFFIC, OR BORING SAMPLES.
2. ALL CONSTRUCTION SHALL CONFORM WITH THE LATEST VERSION OF THE TOWN OF ROLESVILLE AND NCDOT STANDARDS AND SPECIFICATIONS.

SITE DATA:

TOTAL SITE AREA: 222.83 AC
BREACHED POND AREA: 1.41 AC
NO NEW IMPERVIOUS AREA TO BE ADDED

EROSION CONTROL LEGEND

- SILT FENCE OUTLET
- STONE FILTER BERM
- COIR BAFFLE
- SF — SF — SILT FENCE
- LD — LD — LIMITS OF DISTURBANCE
- CONSTRUCTION ENTRANCE/EXIT

FINAL DRAWING - NOT RELEASED FOR CONSTRUCTION

McADAMS
The John R. McAdams Company, Inc.
2905 Meridian Parkway
Durham, NC 27713

phone 919. 361. 5000
fax 919. 361. 2269
license number: C-0293, C-187

www.mcadamsco.com

CLIENT

ALLIANCE GROUP OF NC, LLC
7208 FALLS OF NEUSE RD, SUITE 101
RALEIGH, NORTH CAROLINA 27615
CONTACT: JACOB ANDERSON
PHONE: 919. 239. 9486

AGNC
BROKERAGE | CONSULTING | PLANNING

PEARCE FARM - PHASES 1-3
CONSTRUCTION DRAWINGS - PACKAGE 1
BURLINGTON MILLS ROAD
TOWN OF ROLESVILLE, NORTH CAROLINA

CID-24-08

NORTH CAROLINA PROFESSIONAL SEAL 054404 ENGINEER MARIA C. TORRES
NOT FOR CONSTRUCTION

REVISIONS

NO.	DATE	
1	02. 03. 2025	REVISED PER TOWN, CITY AND COUNTY COMMENTS

PLAN INFORMATION

PROJECT NO.	AGN23001
FILENAME	AGN23001-EC1
CHECKED BY	MCT
DRAWN BY	CSB
SCALE	1" = 20'
DATE	12. 02. 2024

SHEET

DAM BREACH PLAN

C6.002

X:\Projects\AGN\AGN23001\04-Production\Water Resources\Stormwater Management\Dam Breach\Current Drawings\AGN23001-EC1.dwg, 1/31/2025 2:00:27 PM, Mirabelle Javellana

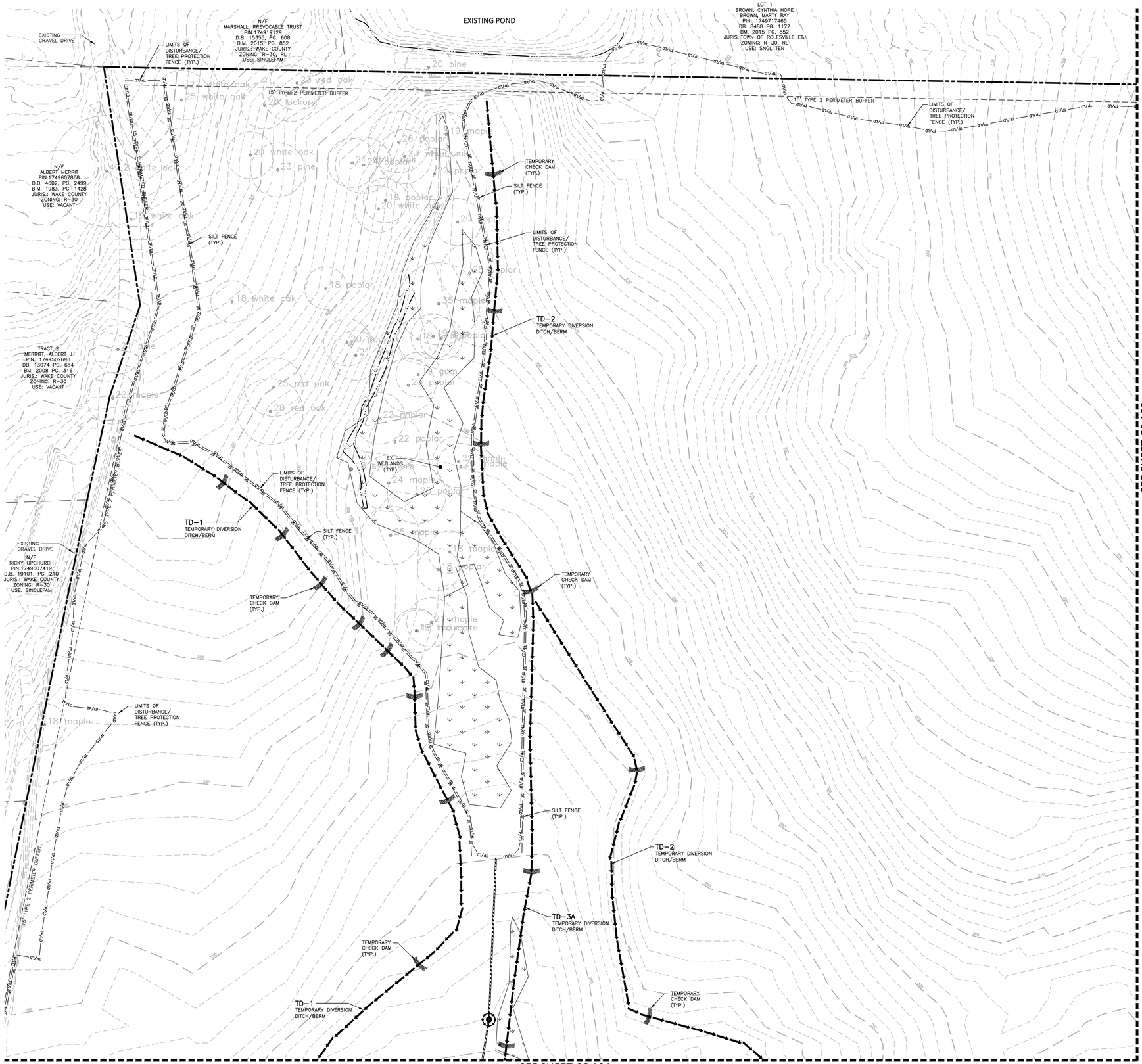

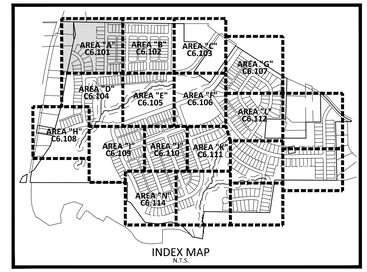

INDEX MAP
N.T.S.

EROSION CONTROL LEGEND

- SILT FENCE OUTLET
- INLET PROTECTION
- INLET PROTECTION FOR EXISTING STRUCTURES
- TEMPORARY SLOPE DRAIN
- FILTER BERM
- CHECK DAM
- SF — SF — SF — SILT FENCE
- TP — TP — TP — TREE PROTECTION FENCE
- LD — LD — LIMITS OF DISTURBANCE
- TP/LD — TP/LD — TREE PROTECTION FENCE/ LIMITS OF DISTURBANCE
- WOODED AREA
- DIVERSION DITCH
- CONSTRUCTION ENTRANCE/EXIT

SEE SHEET C6.000 FOR ALL EROSION CONTROL NOTES, CONSTRUCTION SEQUENCING, SEDIMENT BASIN AND TEMPORARY DIVERSION DITCH DATA, AND SEEING SPECIFICATIONS

SEE SHEET C0.01 FOR ALL PROJECT, SITE, GRADING, STORM DRAINAGE AND UTILITY NOTES

GRAPHIC SCALE
0 20 40 80
1 inch = 40 ft.

FINAL DRAWING - NOT RELEASED FOR CONSTRUCTION

McADAMS
The John R. McAdams Company, Inc.
2905 Meridian Parkway
Durham, NC 27713

phone 919. 361. 5000
fax 919. 361. 2269
license number: C-0293, C-187

www.mcadamsco.com

CLIENT

ALLIANCE GROUP OF NC, LLC
7208 FALLS OF NEUSE RD, SUITE 101
RALEIGH, NORTH CAROLINA 27615
CONTACT: JACOB ANDERSON
PHONE: 919. 239. 9486

AGNC BROKERAGE | CONSULTING | PLANNING

PEARCE FARM - PHASES 1-3
CONSTRUCTION DRAWINGS - PACKAGE 1
BURLINGTON MILLS ROAD
TOWN OF ROLESVILLE, NORTH CAROLINA

CID-24-08

NORTH CAROLINA PROFESSIONAL SEAL 22630 ENGINEER WILLIAM T. O'DANIEL — NOT FOR CONSTRUCTION

REVISIONS

NO.	DATE	
1	02. 03. 2025	REVISED PER TOWN, CITY AND COUNTY COMMENTS

PLAN INFORMATION

PROJECT NO.	AGN23001
FILENAME	AGN23001-EC1
CHECKED BY	.
DRAWN BY	.
SCALE	1"=40'
DATE	12. 02. 2024

SHEET

EROSION CONTROL PLAN STAGE 1 AREA "A"

C6.101

X:\Projects\AGN\AGN23001\04-Production\Engineering\Construction Drawings\Current Drawings\AGN23001-EC1.dwg, 1/29/2025 9:20:54 AM, Sherrill Williams

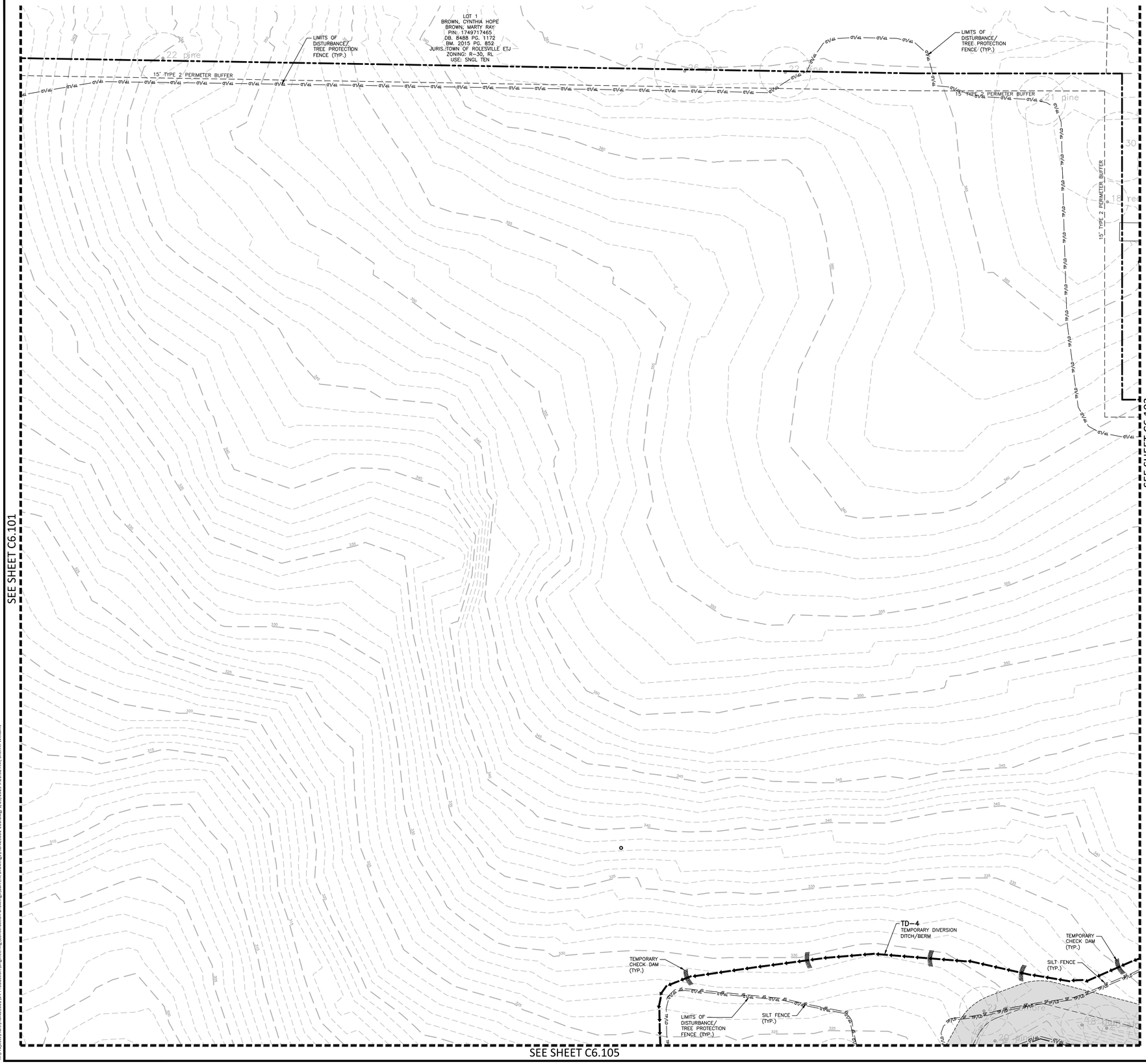

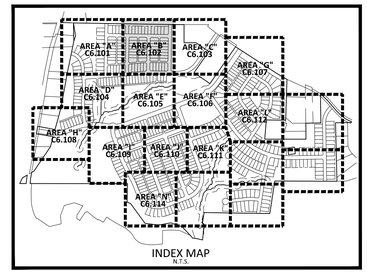

INDEX MAP
N.T.S.

EROSION CONTROL LEGEND

- SILT FENCE OUTLET
- INLET PROTECTION
- INLET PROTECTION FOR EXISTING STRUCTURES
- TEMPORARY SLOPE DRAIN
- FILTER BERM
- CHECK DAM
- SF — SF — SF — SILT FENCE
- TP — TP — TP — TREE PROTECTION FENCE
- LD — LD — LIMITS OF DISTURBANCE
- TP/LD — TP/LD — TREE PROTECTION FENCE/ LIMITS OF DISTURBANCE
- WOODED AREA
- DIVERSION DITCH
- CONSTRUCTION ENTRANCE/EXIT

SEE SHEET C6.000 FOR ALL EROSION CONTROL NOTES, CONSTRUCTION SEQUENCING, SEDIMENT BASIN AND TEMPORARY DIVERSION DITCH DATA, AND SEEING SPECIFICATIONS

SEE SHEET C0.01 FOR ALL PROJECT, SITE, GRADING, STORM DRAINAGE AND UTILITY NOTES

GRAPHIC SCALE
0 20 40 80
1 inch = 40 ft.

FINAL DRAWING - NOT RELEASED FOR CONSTRUCTION

McADAMS
The John R. McAdams Company, Inc.
2905 Meridian Parkway
Durham, NC 27713

phone 919. 361. 5000
fax 919. 361. 2269
license number: C-0293, C-187

www.mcadamsco.com

CLIENT

ALLIANCE GROUP OF NC, LLC
7208 FALLS OF NEUSE RD, SUITE 101
RALEIGH, NORTH CAROLINA 27615
CONTACT: JACOB ANDERSON
PHONE: 919. 239. 9486

AGNC BROKERAGE | CONSULTING | PLANNING

PEARCE FARM - PHASES 1-3
CONSTRUCTION DRAWINGS - PACKAGE 1
BURLINGTON MILLS ROAD
TOWN OF ROLESVILLE, NORTH CAROLINA

CID-24-08

NORTH CAROLINA PROFESSIONAL ENGINEER SEAL 22630 WILLIAM T. O'DANIEL — NOT FOR CONSTRUCTION

REVISIONS

NO.	DATE	
1	02. 03. 2025	REVISED PER TOWN, CITY AND COUNTY COMMENTS

PLAN INFORMATION

PROJECT NO.	AGN23001
FILENAME	AGN23001-EC1
CHECKED BY	.
DRAWN BY	.
SCALE	1"=40'
DATE	12. 02. 2024

SHEET

EROSION CONTROL PLAN
STAGE 1
AREA "B"

C6.102

X:\Projects\AGN\AGN23001\04-Production\Engineering\Construction Drawings\Current Drawings\AGN23001-EC1.dwg, 1/29/2025 9:21:32 AM, Sherrill Williams

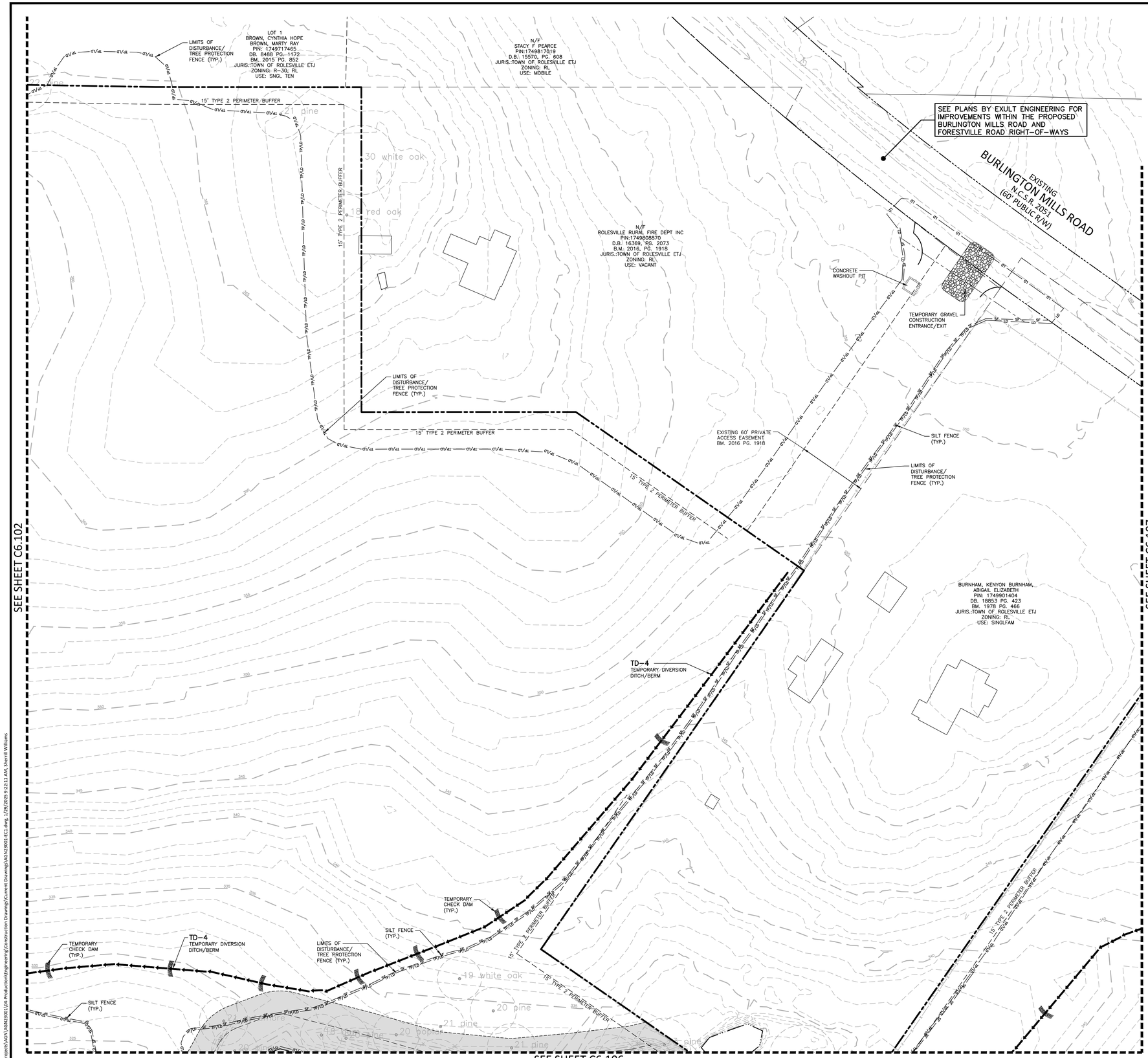

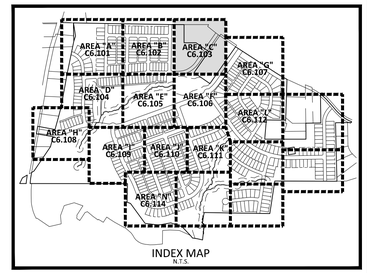

INDEX MAP
N.T.S.

EROSION CONTROL LEGEND

- SILT FENCE OUTLET
- INLET PROTECTION
- INLET PROTECTION FOR EXISTING STRUCTURES
- TEMPORARY SLOPE DRAIN
- FILTER BERM
- CHECK DAM
- SF — SF — SF — SILT FENCE
- TP — TP — TP — TREE PROTECTION FENCE
- LD — LD — LIMITS OF DISTURBANCE
- TP/LD — TP/LD — TREE PROTECTION FENCE/ LIMITS OF DISTURBANCE
- WOODED AREA
- DIVERSION DITCH
- CONSTRUCTION ENTRANCE/EXIT

SEE SHEET C6.000 FOR ALL EROSION CONTROL NOTES, CONSTRUCTION SEQUENCING, SEDIMENT BASIN AND TEMPORARY DIVERSION DITCH DATA, AND SEEING SPECIFICATIONS

SEE SHEET C0.01 FOR ALL PROJECT, SITE, GRADING, STORM DRAINAGE AND UTILITY NOTES

GRAPHIC SCALE
0 20 40 80
1 inch = 40 ft.

FINAL DRAWING - NOT RELEASED FOR CONSTRUCTION

McADAMS
The John R. McAdams Company, Inc.
2905 Meridian Parkway
Durham, NC 27713

phone 919. 361. 5000
fax 919. 361. 2269
license number: C-0293, C-187

www.mcadamsco.com

CLIENT

ALLIANCE GROUP OF NC, LLC
7208 FALLS OF NEUSE RD, SUITE 101
RALEIGH, NORTH CAROLINA 27615
CONTACT: JACOB ANDERSON
PHONE: 919. 239. 9486

AGNC BROKERAGE | CONSULTING | PLANNING

PEARCE FARM - PHASES 1-3
CONSTRUCTION DRAWINGS - PACKAGE 1
BURLINGTON MILLS ROAD
TOWN OF ROLESVILLE, NORTH CAROLINA

CID-24-08

NORTH CAROLINA PROFESSIONAL ENGINEER SEAL 22630 WILLIAM F. O'DANIEL — NOT FOR CONSTRUCTION

REVISIONS

NO.	DATE	
1	02. 03. 2025	REVISED PER TOWN, CITY AND COUNTY COMMENTS

PLAN INFORMATION

PROJECT NO.	AGN23001
FILENAME	AGN23001-EC1
CHECKED BY	.
DRAWN BY	.
SCALE	1"=40'
DATE	12. 02. 2024

SHEET

EROSION CONTROL PLAN
STAGE 1
AREA "C"

C6.103

X:\Projects\AGN\AGN23001\04-Production\Engineering\Construction Drawings\Current Drawings\AGN23001-EC1.dwg, 1/29/2025 9:22:11 AM, Sherrill Williams

SEE SHEET C6.101

SEE SHEET C6.105

SEE SHEET C6.108

SEE SHEET C6.109

N/F
RICKY UPCHURCH
PIN:1749606380
D.B. 19101, PG. 210
JURIS.: WAKE COUNTY
ZONING: R-30
USE: FORESTRY

N/F
ANNIE THOMAS
PIN:1749606158
B.M. 2016, PG. 996
JURIS.: WAKE COUNTY
ZONING: R-30
USE: VACANT

N/F
RICKEY UPCHURCH
PIN:1749606020
D.B. 16461, PG. 1373
B.M. 2016, PG. 996
JURIS.: WAKE COUNTY
ZONING: R-30
USE: SINGLEFAM

LIMITS OF DISTURBANCE/ TREE PROTECTION FENCE (TYP.)

SILT FENCE (TYP.)

TYPE 2 PERIMETER BUFFER

TD-1 TEMPORARY DIVERSION DITCH/BERM

TD-2 TEMPORARY DIVERSION DITCH/BERM

TD-3 TEMPORARY DIVERSION DITCH/BERM

TD-3A TEMPORARY DIVERSION DITCH/BERM

TEMPORARY CHECK DAM (TYP.)

SILT FENCE OUTLET AT ALL LOW POINTS (TYP.)

SD-3 TEMPORARY SLOPE DRAIN (TYP.) 12" DIAMETER HDPE

SD-2 TEMPORARY SLOPE DRAIN (TYP.) 24" DIAMETER HDPE

SB-2 (SEE SUMMARY TABLE)

SB-A (SEE SUMMARY TABLE)

EX. WETLANDS (TYP.)

SKIMMER DEVICE, SEE SUMMARY TABLE SHEET C6.000

COIR BAFFLES (TYP.)

MAINTENANCE PAD NOTE: WHEN CLEANING OUT BASIN, PLACE SILT BAG HERE FOR DISCHARGING SEDIMENT LADEN WATER.

50' NEUSE RIPARIAN BUFFER (MEASURED 50' FROM TOP OF BANK, EACH SIDE)

TOP OF BANK (TYP.)

ZONE 1

ZONE 2

SKIMMER DEVICE ATTACHED TO RISER BARREL. SEE SUMMARY TABLE SHEET C6.000

DOUBLE ROW SILT FENCE WITH SILT FENCE OUTLETS (REMOVE AFTER CULVERT IS INSTALLED)

PUMP TO DIVERT STREAM FLOW REQUIRED TO INSTALL PERMANENT STREAM CROSSING

AQUA BARRIER COFFER DAM OR APPROVED EQUIVALENT

PUMP AROUND WORK AREA THROUGH FILTER BAG

PROVIDE SINGLE-SPAN TIMBER MAT, SEE DETAIL ON SHEET C6.06

TEMPORARY CHECK DAM (TYP.)

INDEX MAP
N.T.S.

AREA "A" C6.101
AREA "B" C6.102
AREA "C" C6.103
AREA "D" C6.104
AREA "E" C6.105
AREA "F" C6.106
AREA "G" C6.107
AREA "H" C6.108
AREA "I" C6.109
AREA "J" C6.110
AREA "K" C6.111
AREA "L" C6.112
AREA "M" C6.113
AREA "N" C6.114

EROSION CONTROL LEGEND

- SILT FENCE OUTLET
- INLET PROTECTION
- INLET PROTECTION FOR EXISTING STRUCTURES
- TEMPORARY SLOPE DRAIN
- FILTER BERM
- CHECK DAM
- SF SF SF — SILT FENCE
- TP TP TP — TREE PROTECTION FENCE
- LD LD — LIMITS OF DISTURBANCE
- TP/LD TP/LD — TREE PROTECTION FENCE/ LIMITS OF DISTURBANCE
- WOODED AREA
- DIVERSION DITCH
- CONSTRUCTION ENTRANCE/EXIT

PUMP AROUND NOTE:
CULVERT INSTALLATION OPERATIONS SHALL BE CONDUCTED DURING DURING RELATIVELY DRY PERIODS WHEN HEAVY RAINFALLS ARE NOT EXPECTED DURING THE CONSTRUCTION PERIOD. THE CONTRACTOR SHALL PROVIDE AT LEAST A 2"-3" PUMP THAT WILL CONVEY AT LEAST 140.0 GPM, WHICH IS THE APPROXIMATE BASE FLOW OF THE STREAM. THE PUMP SHALL ALSO BE CAPABLE OF CONVEYING THE REQUIRED FLOW WITH 5-FEET STATIC HEAD. CONTRACTOR SHALL SUBMIT PUMP SPECIFICATIONS TO THE ENGINEER FOR APPROVAL.

SEE SHEET C6.000 FOR ALL EROSION CONTROL NOTES, CONSTRUCTION SEQUENCING, SEDIMENT BASIN AND TEMPORARY DIVERSION DITCH DATA, AND SEEING SPECIFICATIONS

SEE SHEET C0.01 FOR ALL PROJECT, SITE, GRADING, STORM DRAINAGE AND UTILITY NOTES

GRAPHIC SCALE
0 20 40 80
1 inch = 40 ft.

FINAL DRAWING - NOT RELEASED FOR CONSTRUCTION

McADAMS
The John R. McAdams Company, Inc.
2905 Meridian Parkway
Durham, NC 27713

phone 919. 361. 5000
fax 919. 361. 2269
license number: C-0293, C-187

www.mcadamsco.com

CLIENT

ALLIANCE GROUP OF NC, LLC
7208 FALLS OF NEUSE RD, SUITE 101
RALEIGH, NORTH CAROLINA 27615
CONTACT: JACOB ANDERSON
PHONE: 919. 239. 9486

AGNC BROKERAGE | CONSULTING | PLANNING

PEARCE FARM - PHASES 1-3
CONSTRUCTION DRAWINGS - PACKAGE 1
BURLINGTON MILLS ROAD
TOWN OF ROLESVILLE, NORTH CAROLINA

CID-24-08

NORTH CAROLINA PROFESSIONAL ENGINEER SEAL 22630 WILLIAM T. O'DANIEL — NOT FOR CONSTRUCTION

REVISIONS

NO.	DATE	
1	02. 03. 2025	REVISED PER TOWN, CITY AND COUNTY COMMENTS

PLAN INFORMATION

PROJECT NO.	AGN23001
FILENAME	AGN23001-EC1
CHECKED BY	.
DRAWN BY	.
SCALE	1"=40'
DATE	12. 02. 2024

SHEET

EROSION CONTROL PLAN STAGE 1 AREA "D"

C6.104

X:\Projects\AGN\AGN23001\04-Production\Engineering\Construction Drawings\Current Drawings\AGN23001-EC1.dwg, 1/30/2025 9:23:04 AM, Sherrill Williams

SEE SHEET C6.102

SEE SHEET C6.104

SEE SHEET C6.106

SEE SHEET C6.110

TD-4
TEMPORARY DIVERSION DITCH/BERM

TEMPORARY CHECK DAM (TYP.)

SILT FENCE (TYP.)

LIMITS OF DISTURBANCE/ TREE PROTECTION FENCE (TYP.)

SILT FENCE OUTLET AT ALL LOW POINTS (TYP.)

ZONE 1

ZONE 2

EX. WETLANDS (TYP)

TOP OF BANK (TYP.)

EXISTING POND DAM TO BE BREACHED (SEE DAM BREACH PLANS, SHEETS C6.001-C6.003)

SD-4
TEMPORARY SLOPE DRAIN (TYP.)
24" DIAMETER HDPE

SB-A
(SEE SUMMARY TABLE)

COIR BAFFLES (TYP.)

50' NEUSE RIPARIAN BUFFER (MEASURED 50' FROM TOP OF BANK, EACH SIDE)

LIMITS OF DISTURBANCE/ TREE PROTECTION FENCE (TYP.)

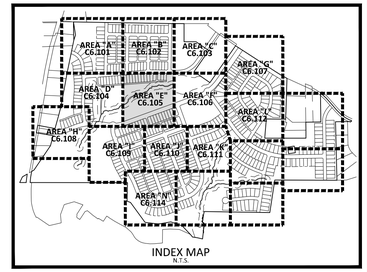

INDEX MAP
N.T.S.

EROSION CONTROL LEGEND

- SILT FENCE OUTLET
- INLET PROTECTION
- INLET PROTECTION FOR EXISTING STRUCTURES
- TEMPORARY SLOPE DRAIN
- FILTER BERM
- CHECK DAM
- SILT FENCE (SF — SF — SF)
- TREE PROTECTION FENCE (TP — TP — TP)
- LIMITS OF DISTURBANCE (LD — LD)
- TREE PROTECTION FENCE/ LIMITS OF DISTURBANCE (TP/LD — TP/LD)
- WOODED AREA
- DIVERSION DITCH
- CONSTRUCTION ENTRANCE/EXIT

SEE SHEET C6.000 FOR ALL EROSION CONTROL NOTES, CONSTRUCTION SEQUENCING, SEDIMENT BASIN AND TEMPORARY DIVERSION DITCH DATA, AND SEEING SPECIFICATIONS

SEE SHEET C0.01 FOR ALL PROJECT, SITE, GRADING, STORM DRAINAGE AND UTILITY NOTES

GRAPHIC SCALE
0 20 40 80
1 inch = 40 ft.

FINAL DRAWING - NOT RELEASED FOR CONSTRUCTION

McADAMS
The John R. McAdams Company, Inc.
2905 Meridian Parkway
Durham, NC 27713

phone 919. 361. 5000
fax 919. 361. 2269
license number: C-0293, C-187

www.mcadamsco.com

CLIENT

ALLIANCE GROUP OF NC, LLC
7208 FALLS OF NEUSE RD, SUITE 101
RALEIGH, NORTH CAROLINA 27615
CONTACT: JACOB ANDERSON
PHONE: 919. 239. 9486

AGNC BROKERAGE | CONSULTING | PLANNING

PEARCE FARM - PHASES 1-3
CONSTRUCTION DRAWINGS - PACKAGE 1
BURLINGTON MILLS ROAD
TOWN OF ROLESVILLE, NORTH CAROLINA

CID-24-08

NORTH CAROLINA PROFESSIONAL SEAL 22630 ENGINEER WILLIAM T. O'DANIEL
NOT FOR CONSTRUCTION

REVISIONS

NO.	DATE	
1	02. 03. 2025	REVISED PER TOWN, CITY AND COUNTY COMMENTS

PLAN INFORMATION

PROJECT NO.	AGN23001
FILENAME	AGN23001-EC1
CHECKED BY	.
DRAWN BY	.
SCALE	1"=40'
DATE	12. 02. 2024

SHEET

EROSION CONTROL PLAN
STAGE 1
AREA "E"

C6.105

X:\Projects\AGN\AGN23001\04-Production\Engineering\Construction Drawings\Current Drawings\AGN23001-EC1.dwg, 1/29/2025 9:23:46 AM, Sherrill Williams

SEE SHEET C6.103

SEE SHEET C6.105

SEE SHEET C6.107

SEE SHEET C6.110

SEE SHEET C6.111

EXISTING POND
DAM TO BE BREACHED
(SEE DAM BREACH PLANS,
SHEETS C6.001-C6.003)

BURNHAM, KENYON BURNHAM, ABIGAIL ELIZABETH
PIN: 9749901404
DB. 18853 PG. 423
BM. 1976 PG. 466
JURIS.:TOWN OF ROLESVILLE ETJ
ZONING: RL
USE: SINGLFAM

LIMITS OF DISTURBANCE/ TREE PROTECTION FENCE (TYP.)

TEMPORARY CHECK DAM (TYP.)

TD-8
TEMPORARY DIVERSION DITCH/BERM

SILT FENCE (TYP.)

50' NEUSE RIPARIAN BUFFER (MEASURED 50' FROM TOP OF BANK, EACH SIDE)

SILT FENCE OUTLET AT ALL LOW POINTS (TYP.)

TD-9
TEMPORARY DIVERSION DITCH/BERM

ZONE 1

ZONE 2

INDEX MAP
N.T.S.

AREA "A" C6.101 | AREA "B" C6.102 | AREA "C" C6.103 | AREA "C" C6.107
AREA "D" C6.104 | AREA "E" C6.105 | AREA "F" C6.106 | AREA "G" C6.112
AREA "H" C6.108 | AREA "I" C6.109 | AREA "J" C6.110 | AREA "K" C6.111
AREA "M" C6.114

EROSION CONTROL LEGEND

- SILT FENCE OUTLET
- INLET PROTECTION
- INLET PROTECTION FOR EXISTING STRUCTURES
- TEMPORARY SLOPE DRAIN
- FILTER BERM
- CHECK DAM
- SF — SF — SF — SILT FENCE
- TP — TP — TP — TREE PROTECTION FENCE
- LD — LD — LIMITS OF DISTURBANCE
- TP/LD — TP/LD — TREE PROTECTION FENCE/ LIMITS OF DISTURBANCE
- WOODED AREA
- DIVERSION DITCH
- CONSTRUCTION ENTRANCE/EXIT

SEE SHEET C6.000 FOR ALL EROSION CONTROL NOTES, CONSTRUCTION SEQUENCING, SEDIMENT BASIN AND TEMPORARY DIVERSION DITCH DATA, AND SEEING SPECIFICATIONS

SEE SHEET C0.01 FOR ALL PROJECT, SITE, GRADING, STORM DRAINAGE AND UTILITY NOTES

GRAPHIC SCALE
0 20 40 80
1 inch = 40 ft.

FINAL DRAWING - NOT RELEASED FOR CONSTRUCTION

McADAMS
The John R. McAdams Company, Inc.
2905 Meridian Parkway
Durham, NC 27713

phone 919. 361. 5000
fax 919. 361. 2269
license number: C-0293, C-187

www.mcadamsco.com

CLIENT

ALLIANCE GROUP OF NC, LLC
7208 FALLS OF NEUSE RD, SUITE 101
RALEIGH, NORTH CAROLINA 27615
CONTACT: JACOB ANDERSON
PHONE: 919. 239. 9486

AGNC BROKERAGE | CONSULTING | PLANNING

PEARCE FARM - PHASES 1-3
CONSTRUCTION DRAWINGS - PACKAGE 1
BURLINGTON MILLS ROAD
TOWN OF ROLESVILLE, NORTH CAROLINA

CID-24-08

NORTH CAROLINA PROFESSIONAL ENGINEER SEAL 22630 WILLIAM T. O'DANIEL — NOT FOR CONSTRUCTION

REVISIONS

NO.	DATE	
1	02. 03. 2025	REVISED PER TOWN, CITY AND COUNTY COMMENTS

PLAN INFORMATION

PROJECT NO.	AGN23001
FILENAME	AGN23001-EC1
CHECKED BY	.
DRAWN BY	.
SCALE	1"=40'
DATE	12. 02. 2024

SHEET

EROSION CONTROL PLAN
STAGE 1
AREA "F"

C6.106

X:\Projects\AGN\AGN23001\04-Production\Engineering\Construction Drawings\Current Drawings\AGN23001-EC1.dwg, 1/29/2025 9:24:20 AM, Sherrill Williams

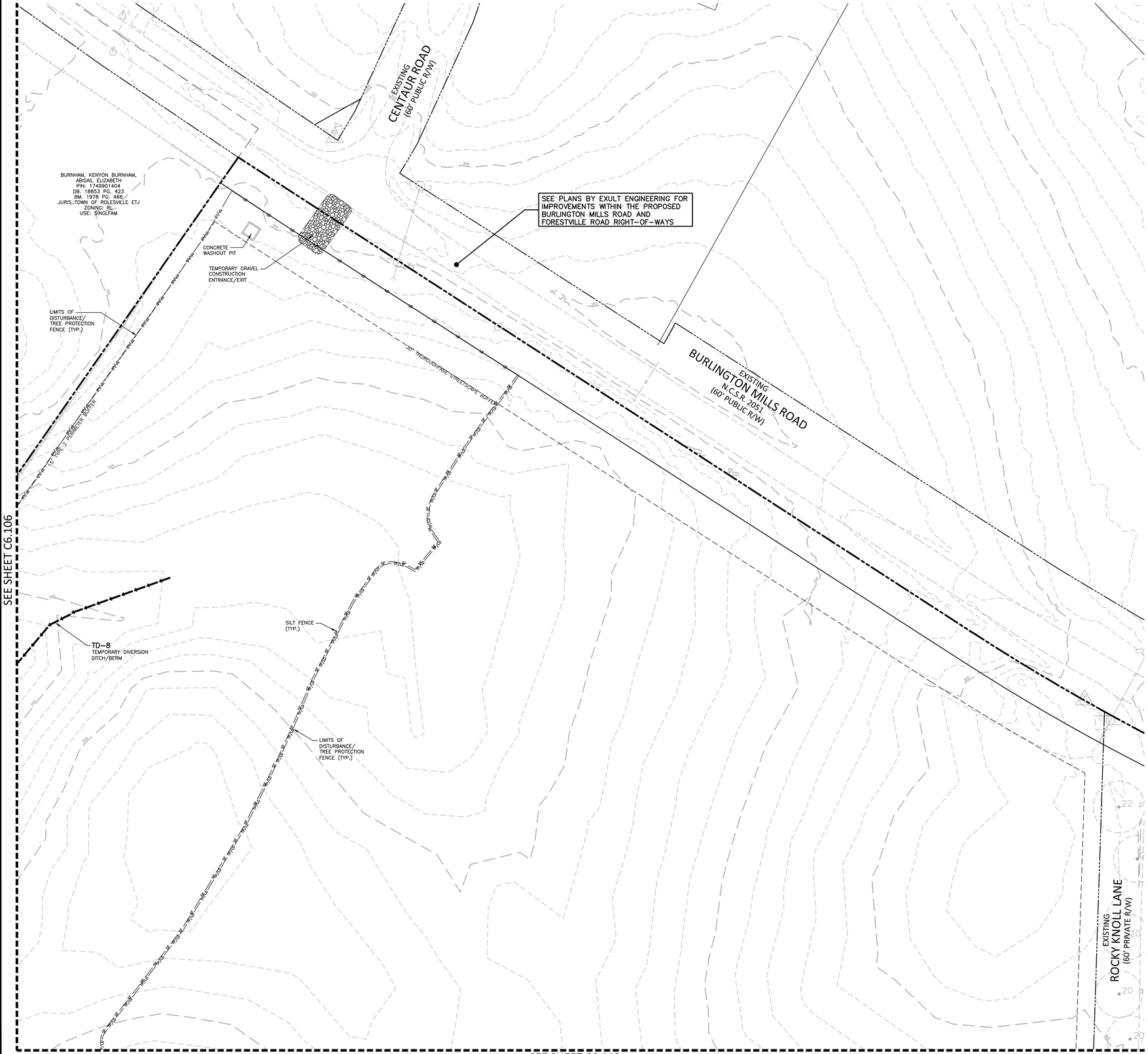

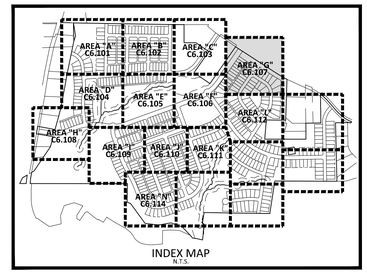

INDEX MAP
N.T.S.

EROSION CONTROL LEGEND

- SILT FENCE OUTLET
- INLET PROTECTION
- INLET PROTECTION FOR EXISTING STRUCTURES
- TEMPORARY SLOPE DRAIN
- FILTER BERM
- CHECK DAM
- SILT FENCE
- TREE PROTECTION FENCE
- LIMITS OF DISTURBANCE
- TREE PROTECTION FENCE/ LIMITS OF DISTURBANCE
- WOODED AREA
- DIVERSION DITCH
- CONSTRUCTION ENTRANCE/EXIT

SEE SHEET C6.000 FOR ALL EROSION CONTROL NOTES, CONSTRUCTION SEQUENCING, SEDIMENT BASIN AND TEMPORARY DIVERSION DITCH DATA, AND SEEING SPECIFICATIONS

SEE SHEET C0.01 FOR ALL PROJECT, SITE, GRADING, STORM DRAINAGE AND UTILITY NOTES

GRAPHIC SCALE
0 20 40 80
1 inch = 40 ft.

FINAL DRAWING - NOT RELEASED FOR CONSTRUCTION

MCADAMS
The John R. McAdams Company, Inc.
2905 Meridian Parkway
Durham, NC 27713

phone 919. 361. 5000
fax 919. 361. 2269
license number: C-0293, C-187

www.mcadamsco.com

CLIENT

ALLIANCE GROUP OF NC, LLC
7208 FALLS OF NEUSE RD, SUITE 101
RALEIGH, NORTH CAROLINA 27615
CONTACT: JACOB ANDERSON
PHONE: 919. 239. 9486

AGNC BROKERAGE | CONSULTING | PLANNING

PEARCE FARM - PHASES 1-3
CONSTRUCTION DRAWINGS - PACKAGE 1
BURLINGTON MILLS ROAD
TOWN OF ROLESVILLE, NORTH CAROLINA

CID-24-08

NORTH CAROLINA PROFESSIONAL ENGINEER SEAL 22630 WILLIAM T. CRANFILL — NOT FOR CONSTRUCTION

REVISIONS

NO.	DATE	
1	02. 03. 2025	REVISED PER TOWN, CITY AND COUNTY COMMENTS

PLAN INFORMATION

PROJECT NO.	AGN23001
FILENAME	AGN23001-EC1
CHECKED BY	.
DRAWN BY	.
SCALE	1"=40'
DATE	12. 02. 2024

SHEET

EROSION CONTROL PLAN
STAGE 1
AREA "G"

C6.107

X:\Projects\AGN\AGN23001\04-Production\Engineering\Construction Drawings\Current Drawings\AGN23001-EC1.dwg, 1/29/2025 9:24:55 AM, Sherrill Williams

SEE SHEET C6.104

SEE SHEET C6.109

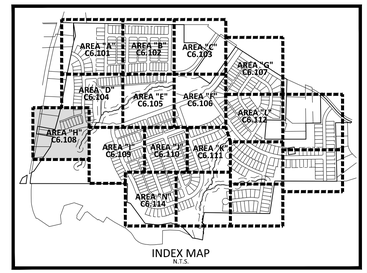

INDEX MAP
N.T.S.

EROSION CONTROL LEGEND

- SILT FENCE OUTLET
- INLET PROTECTION
- INLET PROTECTION FOR EXISTING STRUCTURES
- TEMPORARY SLOPE DRAIN
- FILTER BERM
- CHECK DAM
- SF — SF — SF — SILT FENCE
- TP — TP — TP — TREE PROTECTION FENCE
- LD — LD — LIMITS OF DISTURBANCE
- TP/LD — TP/LD — TREE PROTECTION FENCE/ LIMITS OF DISTURBANCE
- WOODED AREA
- DIVERSION DITCH
- CONSTRUCTION ENTRANCE/EXIT

SEE SHEET C6.000 FOR ALL EROSION CONTROL NOTES, CONSTRUCTION SEQUENCING, SEDIMENT BASIN AND TEMPORARY DIVERSION DITCH DATA, AND SEEING SPECIFICATIONS

SEE SHEET C0.01 FOR ALL PROJECT, SITE, GRADING, STORM DRAINAGE AND UTILITY NOTES

GRAPHIC SCALE
0 20 40 80
1 inch = 40 ft.

FINAL DRAWING - NOT RELEASED FOR CONSTRUCTION

McADAMS
The John R. McAdams Company, Inc.
2905 Meridian Parkway
Durham, NC 27713

phone 919. 361. 5000
fax 919. 361. 2269
license number: C-0293, C-187

www.mcadamsco.com

CLIENT

ALLIANCE GROUP OF NC, LLC
7208 FALLS OF NEUSE RD, SUITE 101
RALEIGH, NORTH CAROLINA 27615
CONTACT: JACOB ANDERSON
PHONE: 919. 239. 9486

AGNC BROKERAGE | CONSULTING | PLANNING

PEARCE FARM - PHASES 1-3
CONSTRUCTION DRAWINGS - PACKAGE 1
BURLINGTON MILLS ROAD
TOWN OF ROLESVILLE, NORTH CAROLINA

CID-24-08

NORTH CAROLINA PROFESSIONAL ENGINEER SEAL 22630 WILLIAM T. O'DONNELL — NOT FOR CONSTRUCTION

REVISIONS

NO.	DATE	
1	02. 03. 2025	REVISED PER TOWN, CITY AND COUNTY COMMENTS

PLAN INFORMATION

PROJECT NO.	AGN23001
FILENAME	AGN23001-EC1
CHECKED BY	.
DRAWN BY	.
SCALE	1"=40'
DATE	12. 02. 2024

SHEET

EROSION CONTROL PLAN STAGE 1 AREA "H"

C6.108

X:\Projects\AGN\AGN23001\04-Production\Engineering\Construction Drawings\Current Drawings\AGN23001-EC1.dwg, 1/29/2025 9:25:40 AM, Sherrill Williams

SEE SHEET C6.104

SEE SHEET C6.108

SEE SHEET C6.110

SEE SHEET C6.114

PUMP TO DIVERT STREAM FLOW REQUIRED TO INSTALL PERMANENT STREAM CROSSING

TEMPORARY CHECK DAM (TYP.)

TD-1 TEMPORARY DIVERSION DITCH/BERM

PUMP AROUND WORK AREA THROUGH FILTER BAG

DOUBLE ROW SILT FENCE WITH SILT FENCE OUTLETS (REMOVE AFTER CULVERT IS INSTALLED)

SILT FENCE OUTLET AT ALL LOW POINTS (TYP.)

PROVIDE SINGLE-SPAN TIMBER MAT. SEE DETAIL ON SHEET C6.06

DOUBLE ROW SILT FENCE WITH SILT FENCE OUTLETS (REMOVE AFTER CULVERT IS INSTALLED)

LIMITS OF DISTURBANCE/ TREE PROTECTION FENCE (TYP.)

SILT FENCE (TYP.)

AQUA BARRIER COFFER DAM OR APPROVED EQUIVALENT

TD-5 TEMPORARY DIVERSION DITCH/BERM

TEMPORARY CHECK DAM (TYP.)

SILT FENCE (TYP.)

TOP OF BANK (TYP.)

50' NEUSE RIPARIAN BUFFER (MEASURED 50' FROM TOP OF BANK/ EACH SIDE)

TD-5 TEMPORARY DIVERSION DITCH/BERM

LIMITS OF DISTURBANCE/ TREE PROTECTION FENCE (TYP.)

SILT FENCE (TYP.)

EX. WETLANDS (TYP)

TEMPORARY CHECK DAM (TYP.)

SD-5 TEMPORARY SLOPE DRAIN (TYP.) 12" DIAMETER HDPE

PROPOSED BOARDWALK ACROSS WETLANDS AND STREAM BUFFERS (TYP.)

SILT FENCE OUTLET AT ALL LOW POINTS (TYP.)

SD-6 TEMPORARY SLOPE DRAIN (TYP.) 12" DIAMETER HDPE

TD-6 TEMPORARY DIVERSION DITCH/BERM

SB-B
(SEE SUMMARY TABLE)

COIR BAFFLES (TYP.)

TOP OF BANK (TYP.)

50' NEUSE RIPARIAN BUFFER (MEASURED 50' FROM TOP OF BANK/ EACH SIDE)

SILT FENCE (TYP.)

LIMITS OF DISTURBANCE/ TREE PROTECTION FENCE (TYP.)

SILT FENCE OUTLET AT ALL LOW POINTS (TYP.)

EX. WETLANDS (TYP)

MAINTENANCE PAD NOTE: WHEN CLEANING OUT BASIN, PLACE SILT BAG HERE FOR DISCHARGING SEDIMENT LADEN WATER.

100 YEAR FLOODPLAIN (TYP.)

SKIMMER DEVICE ATTACHED TO RISER BARREL. SEE SUMMARY TABLE SHEET C6.000

TEMPORARY CHECK DAM (TYP.)

LIMITS OF DISTURBANCE/ TREE PROTECTION FENCE (TYP.)

TD-6 TEMPORARY DIVERSION DITCH/BERM

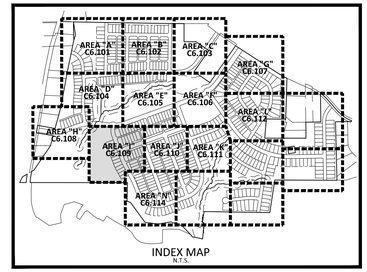

INDEX MAP
N.T.S.

EROSION CONTROL LEGEND

- SILT FENCE OUTLET
- INLET PROTECTION
- INLET PROTECTION FOR EXISTING STRUCTURES
- TEMPORARY SLOPE DRAIN
- FILTER BERM
- CHECK DAM
- SF — SF — SF — SILT FENCE
- TP — TP — TP — TREE PROTECTION FENCE
- LD — LD — LIMITS OF DISTURBANCE
- TP/LD — TP/LD — TREE PROTECTION FENCE/ LIMITS OF DISTURBANCE
- WOODED AREA
- DIVERSION DITCH
- CONSTRUCTION ENTRANCE/EXIT

PUMP AROUND NOTE:
CULVERT INSTALLATION OPERATIONS SHALL BE CONDUCTED DURING DURING RELATIVELY DRY PERIODS WHEN HEAVY RAINFALLS ARE NOT EXPECTED DURING THE CONSTRUCTION PERIOD. THE CONTRACTOR SHALL PROVIDE AT LEAST A 2"-3" PUMP THAT WILL CONVEY AT LEAST 140.0 GPM, WHICH IS THE APPROXIMATE BASE FLOW OF THE STREAM. THE PUMP SHALL ALSO BE CAPABLE OF CONVEYING THE REQUIRED FLOW WITH 5-FEET STATIC HEAD. CONTRACTOR SHALL SUBMIT PUMP SPECIFICATIONS TO THE ENGINEER FOR APPROVAL.

SEE SHEET C6.000 FOR ALL EROSION CONTROL NOTES, CONSTRUCTION SEQUENCING, SEDIMENT BASIN AND TEMPORARY DIVERSION DITCH DATA, AND SEEING SPECIFICATIONS

SEE SHEET C0.01 FOR ALL PROJECT, SITE, GRADING, STORM DRAINAGE AND UTILITY NOTES

GRAPHIC SCALE
0 20 40 80
1 inch = 40 ft.

FINAL DRAWING - NOT RELEASED FOR CONSTRUCTION

MCADAMS
The John R. McAdams Company, Inc.
2905 Meridian Parkway
Durham, NC 27713

phone 919. 361. 5000
fax 919. 361. 2269
license number: C-0293, C-187

www.mcadamsco.com

CLIENT

ALLIANCE GROUP OF NC, LLC
7208 FALLS OF NEUSE RD, SUITE 101
RALEIGH, NORTH CAROLINA 27615
CONTACT: JACOB ANDERSON
PHONE: 919. 239. 9486

AGNC BROKERAGE | CONSULTING | PLANNING

PEARCE FARM - PHASES 1-3
CONSTRUCTION DRAWINGS - PACKAGE 1
BURLINGTON MILLS ROAD
TOWN OF ROLESVILLE, NORTH CAROLINA

CID-24-08

NORTH CAROLINA PROFESSIONAL ENGINEER SEAL 22630 WILLIAM F. O'DANIEL — NOT FOR CONSTRUCTION

REVISIONS

NO.	DATE	
1	02. 03. 2025	REVISED PER TOWN, CITY AND COUNTY COMMENTS

PLAN INFORMATION

PROJECT NO.	AGN23001
FILENAME	AGN23001-EC1
CHECKED BY	.
DRAWN BY	.
SCALE	1"=40'
DATE	12. 02. 2024

SHEET

EROSION CONTROL PLAN STAGE 1 AREA "I"

C6.109

X:\Projects\AGN\AGN23001\04-Production\Engineering\Construction Drawings\Current Drawings\AGN23001-EC1.dwg, 1/30/2025 3:04:27 PM, Sherrill Williams

SEE SHEET C6.106

SEE SHEET C6.109

SEE SHEET C6.111

SEE SHEET C6.114

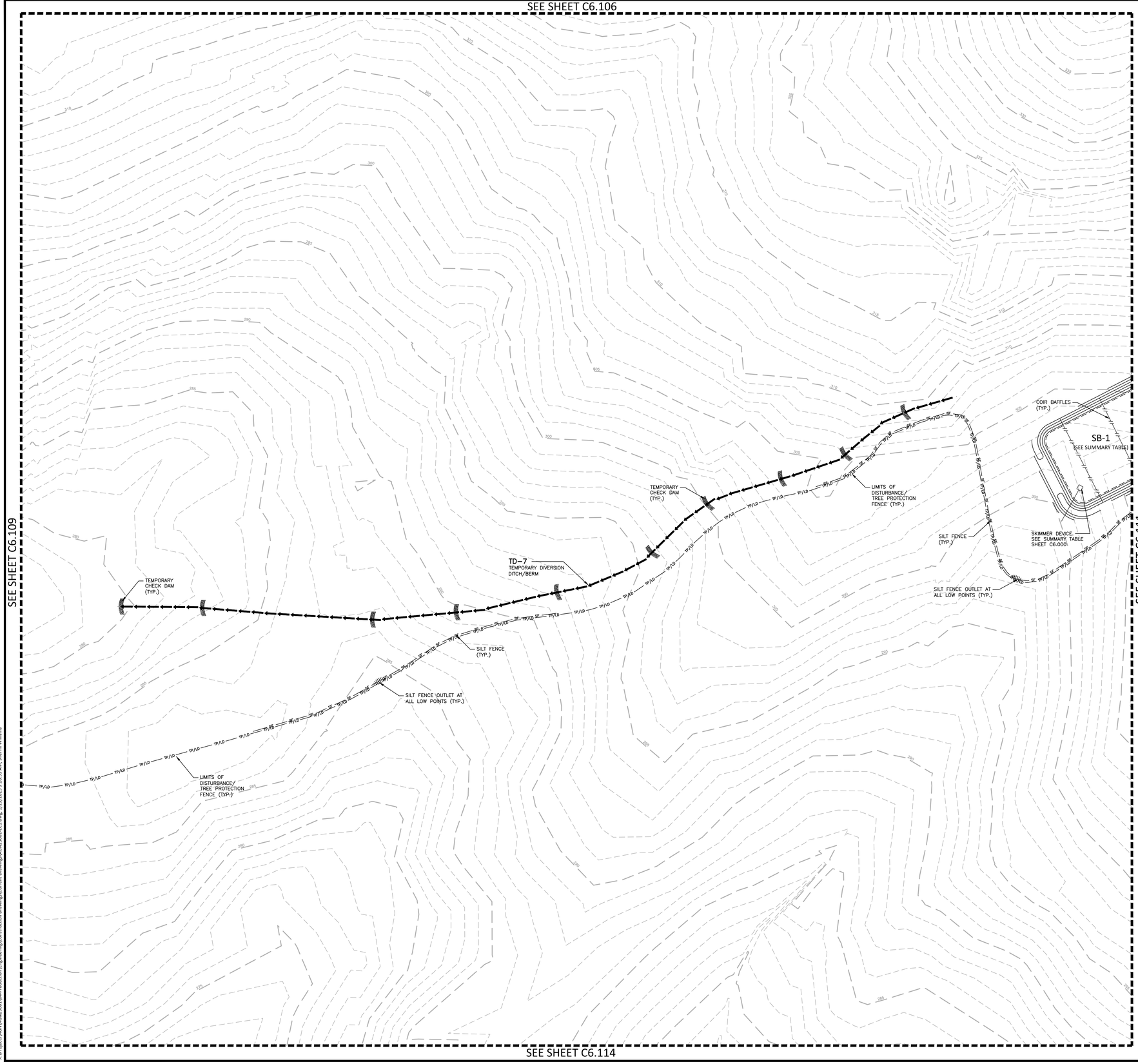

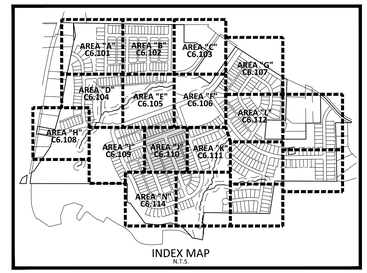

INDEX MAP
N.T.S.

EROSION CONTROL LEGEND

	SILT FENCE OUTLET
	INLET PROTECTION
	INLET PROTECTION FOR EXISTING STRUCTURES
	TEMPORARY SLOPE DRAIN
	FILTER BERM
	CHECK DAM
SF SF SF	SILT FENCE
TP TP TP	TREE PROTECTION FENCE
LD LD	LIMITS OF DISTURBANCE
TP/LD TP/LD	TREE PROTECTION FENCE/ LIMITS OF DISTURBANCE
	WOODED AREA
	DIVERSION DITCH
	CONSTRUCTION ENTRANCE/EXIT

SEE SHEET C6.000 FOR ALL EROSION CONTROL NOTES, CONSTRUCTION SEQUENCING, SEDIMENT BASIN AND TEMPORARY DIVERSION DITCH DATA, AND SEEING SPECIFICATIONS

SEE SHEET C0.01 FOR ALL PROJECT, SITE, GRADING, STORM DRAINAGE AND UTILITY NOTES

GRAPHIC SCALE
0 20 40 80
1 inch = 40 ft.

FINAL DRAWING - NOT RELEASED FOR CONSTRUCTION

McADAMS
The John R. McAdams Company, Inc.
2905 Meridian Parkway
Durham, NC 27713

phone 919. 361. 5000
fax 919. 361. 2269
license number: C-0293, C-187

www.mcadamsco.com

CLIENT

ALLIANCE GROUP OF NC, LLC
7208 FALLS OF NEUSE RD, SUITE 101
RALEIGH, NORTH CAROLINA 27615
CONTACT: JACOB ANDERSON
PHONE: 919. 239. 9486

AGNC BROKERAGE | CONSULTING | PLANNING

PEARCE FARM - PHASES 1-3
CONSTRUCTION DRAWINGS - PACKAGE 1
BURLINGTON MILLS ROAD
TOWN OF ROLESVILLE, NORTH CAROLINA

CID-24-08

NORTH CAROLINA PROFESSIONAL SEAL 22630 ENGINEER WILLIAM T. O'DANIEL — NOT FOR CONSTRUCTION

REVISIONS

NO.	DATE	
1	02. 03. 2025	REVISED PER TOWN, CITY AND COUNTY COMMENTS

PLAN INFORMATION

PROJECT NO.	AGN23001
FILENAME	AGN23001-EC1
CHECKED BY	.
DRAWN BY	.
SCALE	1"=40'
DATE	12. 02. 2024

SHEET

EROSION CONTROL PLAN
STAGE 1
AREA "J"

C6.110

X:\Projects\AGN\AGN23001\04-Production\Engineering\Construction Drawings\Current Drawings\AGN23001-EC1.dwg, 1/29/2025 9:26:53 AM, Sherrill Williams

SEE SHEET C6.106

SEE SHEET C6.110

SEE SHEET C6.116

SEE SHEET C6.115

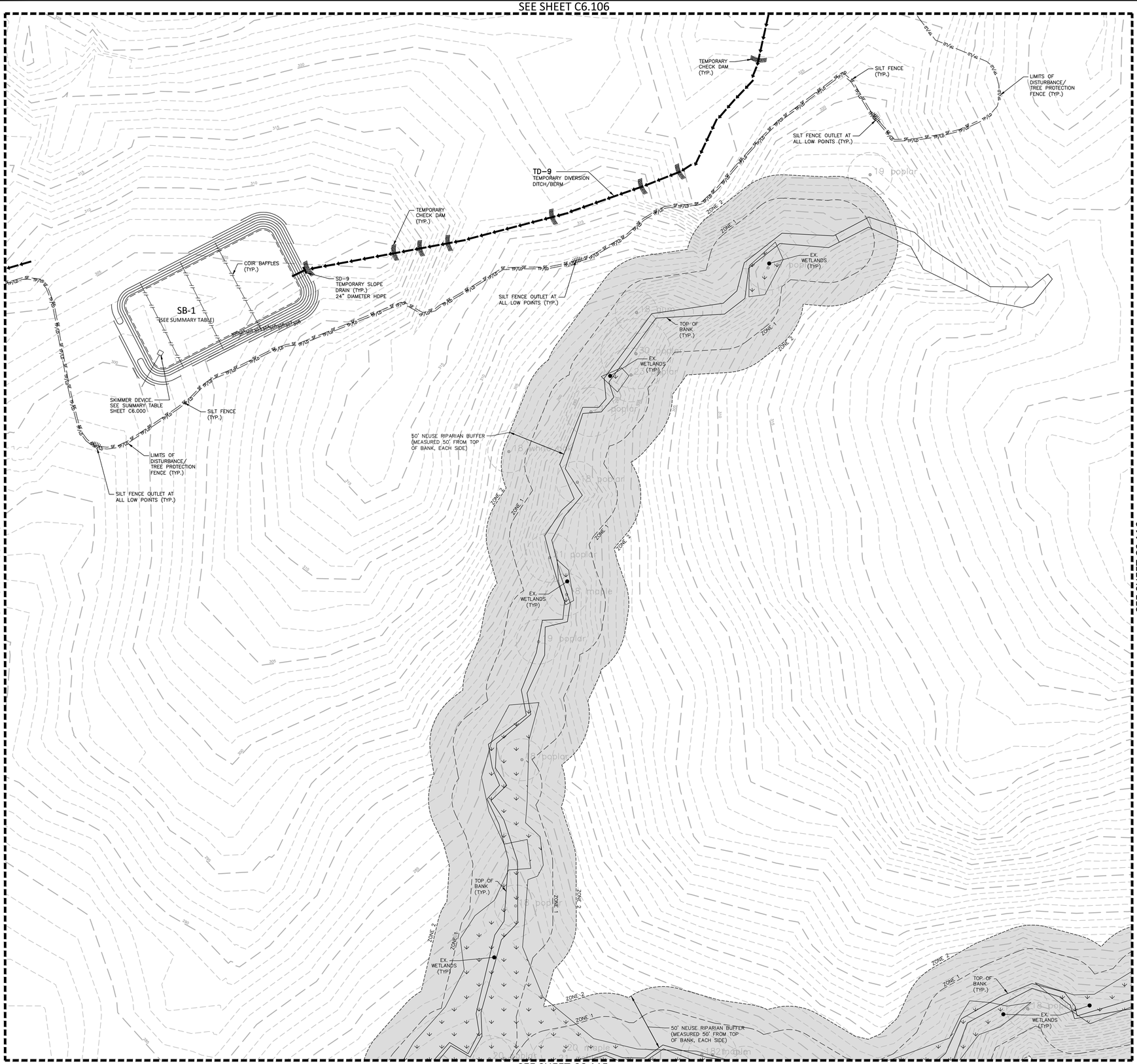

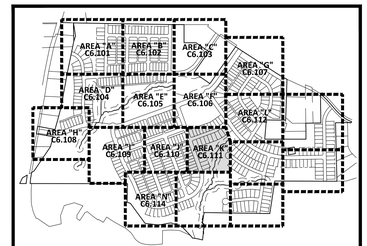

INDEX MAP
N.T.S.

EROSION CONTROL LEGEND

- SILT FENCE OUTLET
- INLET PROTECTION
- INLET PROTECTION FOR EXISTING STRUCTURES
- TEMPORARY SLOPE DRAIN
- FILTER BERM
- CHECK DAM
- SF — SF — SF — SILT FENCE
- TP — TP — TP — TREE PROTECTION FENCE
- LD — LD — LIMITS OF DISTURBANCE
- TP/LD — TP/LD — TREE PROTECTION FENCE/ LIMITS OF DISTURBANCE
- WOODED AREA
- DIVERSION DITCH
- CONSTRUCTION ENTRANCE/EXIT

SEE SHEET C6.000 FOR ALL EROSION CONTROL NOTES, CONSTRUCTION SEQUENCING, SEDIMENT BASIN AND TEMPORARY DIVERSION DITCH DATA, AND SEEING SPECIFICATIONS

SEE SHEET C0.01 FOR ALL PROJECT, SITE, GRADING, STORM DRAINAGE AND UTILITY NOTES

GRAPHIC SCALE
0 20 40 80
1 inch = 40 ft.

FINAL DRAWING - NOT RELEASED FOR CONSTRUCTION

McADAMS
The John R. McAdams Company, Inc.
2905 Meridian Parkway
Durham, NC 27713

phone 919. 361. 5000
fax 919. 361. 2269
license number: C-0293, C-187

www.mcadamsco.com

CLIENT

ALLIANCE GROUP OF NC, LLC
7208 FALLS OF NEUSE RD, SUITE 101
RALEIGH, NORTH CAROLINA 27615
CONTACT: JACOB ANDERSON
PHONE: 919. 239. 9486

AGNC BROKERAGE | CONSULTING | PLANNING

PEARCE FARM - PHASES 1-3
CONSTRUCTION DRAWINGS - PACKAGE 1

BURLINGTON MILLS ROAD
TOWN OF ROLESVILLE, NORTH CAROLINA

CID-24-08

NORTH CAROLINA PROFESSIONAL ENGINEER SEAL 22630 WILLIAM F. O'DANIEL — NOT FOR CONSTRUCTION

REVISIONS

NO.	DATE	
1	02. 03. 2025	REVISED PER TOWN, CITY AND COUNTY COMMENTS

PLAN INFORMATION

PROJECT NO.	AGN23001
FILENAME	AGN23001-EC1
CHECKED BY	.
DRAWN BY	.
SCALE	1"=40'
DATE	12. 02. 2024

SHEET

EROSION CONTROL PLAN
STAGE 1
AREA "K"

C6.111

X:\Projects\AGN\AGN23001\04-Production\Engineering\Construction Drawings\Current Drawing\AGN23001-EC1.dwg, 1/29/2025 9:27:35 AM, Sherrill Williams

SEE SHEET C6.107

SEE SHEET C6.106

SEE SHEET C6.113

SEE SHEET C6.116

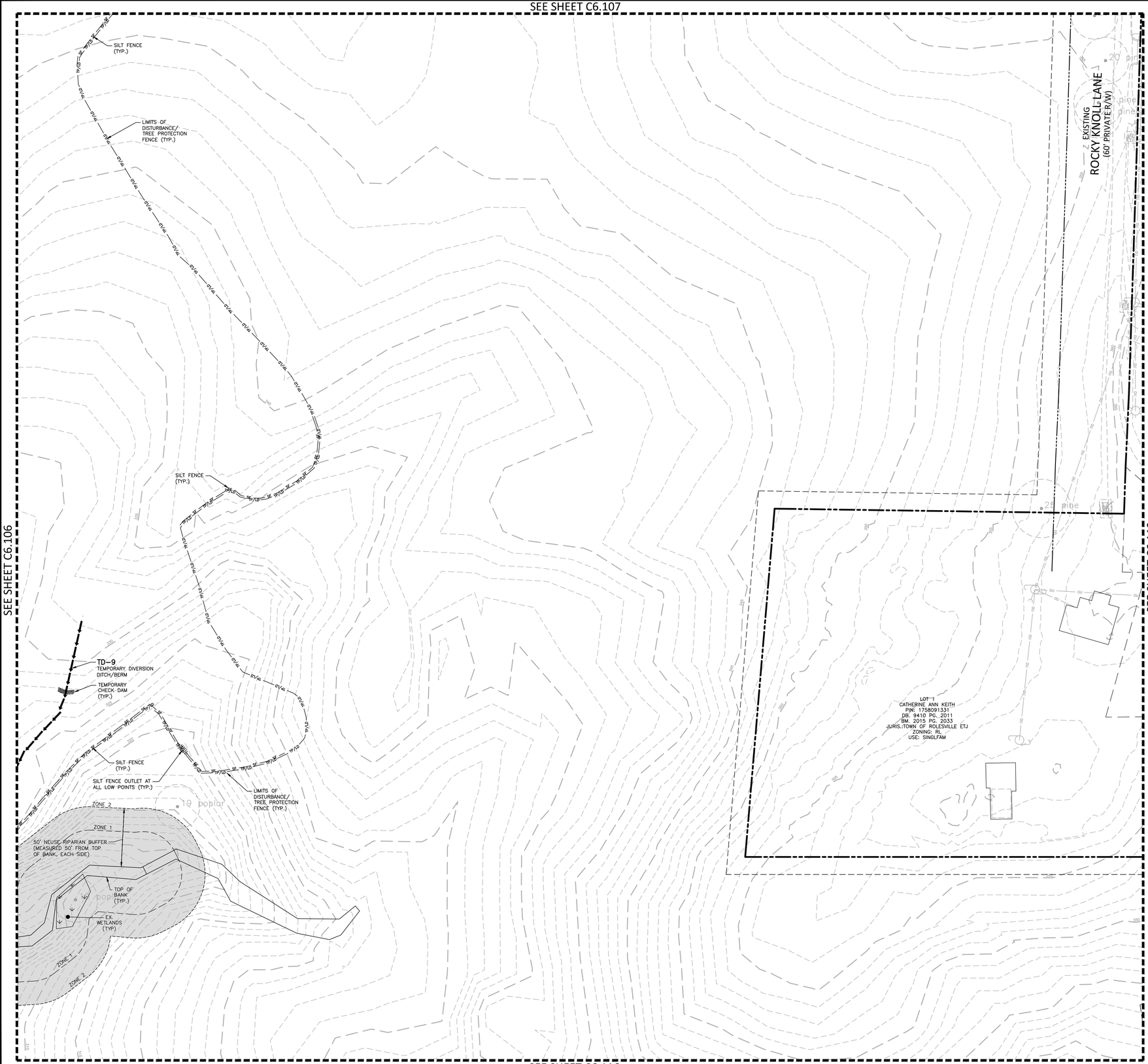

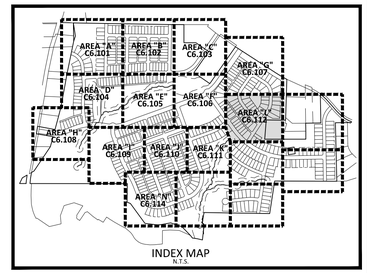

INDEX MAP
N.T.S.

EROSION CONTROL LEGEND

- SILT FENCE OUTLET
- INLET PROTECTION
- INLET PROTECTION FOR EXISTING STRUCTURES
- TEMPORARY SLOPE DRAIN
- FILTER BERM
- CHECK DAM
- SF — SF — SF — SILT FENCE
- TP — TP — TP — TREE PROTECTION FENCE
- LD — LD — LIMITS OF DISTURBANCE
- TP/LD — TP/LD — TREE PROTECTION FENCE/ LIMITS OF DISTURBANCE
- WOODED AREA
- DIVERSION DITCH
- CONSTRUCTION ENTRANCE/EXIT

SEE SHEET C6.000 FOR ALL EROSION CONTROL NOTES, CONSTRUCTION SEQUENCING, SEDIMENT BASIN AND TEMPORARY DIVERSION DITCH DATA, AND SEEING SPECIFICATIONS

SEE SHEET C0.01 FOR ALL PROJECT, SITE, GRADING, STORM DRAINAGE AND UTILITY NOTES

GRAPHIC SCALE
0 20 40 80
1 inch = 40 ft.

FINAL DRAWING - NOT RELEASED FOR CONSTRUCTION

McADAMS
The John R. McAdams Company, Inc.
2905 Meridian Parkway
Durham, NC 27713

phone 919. 361. 5000
fax 919. 361. 2269
license number: C-0293, C-187

www.mcadamsco.com

CLIENT

ALLIANCE GROUP OF NC, LLC
7208 FALLS OF NEUSE RD, SUITE 101
RALEIGH, NORTH CAROLINA 27615
CONTACT: JACOB ANDERSON
PHONE: 919. 239. 9486

AGNC BROKERAGE | CONSULTING | PLANNING

PEARCE FARM - PHASES 1-3
CONSTRUCTION DRAWINGS - PACKAGE 1

BURLINGTON MILLS ROAD
TOWN OF ROLESVILLE, NORTH CAROLINA

CID-24-08

NORTH CAROLINA PROFESSIONAL ENGINEER SEAL 22630 WILLIAM T. CRANIEL — NOT FOR CONSTRUCTION

REVISIONS

NO.	DATE	
1	02. 03. 2025	REVISED PER TOWN, CITY AND COUNTY COMMENTS

PLAN INFORMATION

PROJECT NO.	AGN23001
FILENAME	AGN23001-EC1
CHECKED BY	.
DRAWN BY	.
SCALE	1"=40'
DATE	12. 02. 2024

SHEET

EROSION CONTROL PLAN
STAGE 1
AREA "L"

C6.112

X:\Projects\AGN\AGN23001\04-Production\Engineering\Construction Drawings\Current Drawings\AGN23001-EC1.dwg, 1/29/2025 9:28:09 AM, Sherrill Williams

SEE SHEET C6.110

SEE SHEET C6.109

SEE SHEET C6.115

COIR BAFFLES (TYP.)

SKIMMER DEVICE ATTACHED TO RISER BARREL. SEE SUMMARY TABLE SHEET C6.000

TD-6
TEMPORARY DIVERSION DITCH/BERM

TEMPORARY CHECK DAM (TYP.)

LIMITS OF DISTURBANCE/ TREE PROTECTION FENCE (TYP.)

SILT FENCE (TYP.)

500 YEAR FLOODPLAIN (TYP.)

100 YEAR FLOODPLAIN (TYP.)

EX WETLANDS (TYP)

DRAYTON RESERVE PROPERTY OWNERS ASSOCIATION INC
PIN: 1748782153
DB. 15809 PG. 2499
BM. 2009 PG. 766
JURIS.:TOWN OF ROLESVILLE
ZONING: RM-CZ
USE: HOA

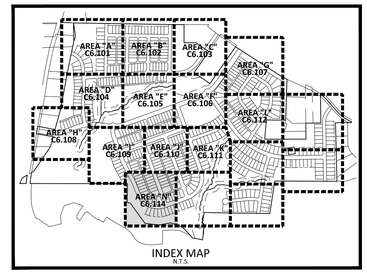

INDEX MAP
N.T.S.

EROSION CONTROL LEGEND

- SILT FENCE OUTLET
- INLET PROTECTION
- INLET PROTECTION FOR EXISTING STRUCTURES
- TEMPORARY SLOPE DRAIN
- FILTER BERM
- CHECK DAM
- SF — SF — SF — SILT FENCE
- TP — TP — TP — TREE PROTECTION FENCE
- LD — LD — LIMITS OF DISTURBANCE
- TP/LD — TP/LD — TREE PROTECTION FENCE/ LIMITS OF DISTURBANCE
- WOODED AREA
- DIVERSION DITCH
- CONSTRUCTION ENTRANCE/EXIT

SEE SHEET C6.000 FOR ALL EROSION CONTROL NOTES, CONSTRUCTION SEQUENCING, SEDIMENT BASIN AND TEMPORARY DIVERSION DITCH DATA, AND SEEING SPECIFICATIONS

SEE SHEET C0.01 FOR ALL PROJECT, SITE, GRADING, STORM DRAINAGE AND UTILITY NOTES

GRAPHIC SCALE
0 20 40 80
1 inch = 40 ft.

FINAL DRAWING - NOT RELEASED FOR CONSTRUCTION

McADAMS
The John R. McAdams Company, Inc.
2905 Meridian Parkway
Durham, NC 27713

phone 919. 361. 5000
fax 919. 361. 2269
license number: C-0293, C-187

www.mcadamsco.com

CLIENT

ALLIANCE GROUP OF NC, LLC
7208 FALLS OF NEUSE RD, SUITE 101
RALEIGH, NORTH CAROLINA 27615
CONTACT: JACOB ANDERSON
PHONE: 919. 239. 9486

AGNC BROKERAGE | CONSULTING | PLANNING

PEARCE FARM - PHASES 1-3
CONSTRUCTION DRAWINGS - PACKAGE 1
BURLINGTON MILLS ROAD
TOWN OF ROLESVILLE, NORTH CAROLINA

CID-24-08

NORTH CAROLINA PROFESSIONAL ENGINEER SEAL 22630 WILLIAM T. CRANFILL — NOT FOR CONSTRUCTION

REVISIONS

NO.	DATE	
1	02. 03. 2025	REVISED PER TOWN, CITY AND COUNTY COMMENTS

PLAN INFORMATION

PROJECT NO.	AGN23001
FILENAME	AGN23001-EC1
CHECKED BY	.
DRAWN BY	.
SCALE	1"=40'
DATE	12. 02. 2024

SHEET

EROSION CONTROL PLAN STAGE 1 AREA "N"

C6.114

X:\Projects\AGN\AGN23001\04-Production\Engineering\Construction Drawings\Current Drawings\AGN23001-EC1.dwg, 1/30/2025 3:05:10 PM, Sherrill Williams

EXISTING POND

N/F
MARSHALL IRREVOCABLE TRUST
PIN:1749919129
D.B. 15355, PG. 608
B.M. 2015, PG. 852
JURIS.: WAKE COUNTY
ZONING: R-30, RL
USE: SINGLEFAM

LOT 1
BROWN, CYNTHIA HOPE
BROWN, MARTY RAY
PIN: 1749717465
DB. 8488 PG. 1172
BM. 2015 PG. 852
JURIS.:TOWN OF ROLESVILLE ETJ
ZONING: R-30, RL
USE: SNGL TEN

N/F
ALBERT MERRIT
PIN:1749607868
D.B. 4602, PG. 2499
B.M. 1983, PG. 1428
JURIS.: WAKE COUNTY
ZONING: R-30
USE: VACANT

TRACT 2
MERRITT, ALBERT J
PIN: 1749502696
DB. 13074 PG. 684
BM. 2008 PG. 316
JURIS.: WAKE COUNTY
ZONING: R-30
USE: VACANT

N/F
RICKY UPCHURCH
PIN:1749607419
D.B. 19101, PG. 210
JURIS.: WAKE COUNTY
ZONING: R-30
USE: SINGLEFAM

EXISTING GRAVEL DRIVE

15' TYPE 2 PERIMETER BUFFER

RETAINING WALL (DESIGN BY OTHERS)

LIMITS OF DISTURBANCE/ TREE PROTECTION FENCE (TYP.)

TEMPORARY INLET PROTECTION (TYP.)

EX. WETLANDS (TYP)

PHASE 1

PHASE 2

CB-134 CB-135 CB-136 CB-137 CB-138 CB-139 CB-140 CB-141 CB-142 CB-143 CB-144 CB-145 CB-146 CB-147 CB-148 CB-149 CB-150 CB-152 CB-153 CB-154 CB-155 CB-155A CB-209 CB-210 CB-211 CB-212 CB-213 CB-214 CB-215 CB-216 CB-217 CB-218 CB-219 CB-220 CB-221 CB-222 CB-223 CB-224 CB-225 CB-226 CB-227 CB-228 CB-229 CB-230 CB-231 CB-232 CB-233 CB-234 CB-235 CB-236 CB-237 CB-238 CB-239 CB-240 CB-241 CB-242 CB-243 CB-244 CB-245 CB-246 CB-247 CB-248 CB-249 CB-250 CB-251 CB-252 CB-253 CB-254 CB-255 CB-256 CB-257 CB-258 CB-259 CB-260 CB-261 CB-262 CB-263 CB-264 CB-265 CB-266 CB-267 CB-268 CB-269

DI-133 DI-134 DI-135 DI-136 DI-137 DI-138 DI-139 DI-140 DI-141 DI-142 DI-143 DI-144 DI-145 DI-146 DI-147 DI-147A DI-148 DI-149 DI-150 DI-151 DI-152 DI-153 DI-154 DI-155 DI-155A DI-156 DI-157 DI-158 DI-159 DI-160 DI-161 DI-162 DI-163 DI-164 DI-165 DI-166 DI-167 DI-168 DI-169 DI-170 DI-171 DI-172 DI-173 DI-174 DI-175 DI-176 DI-177 DI-178 DI-179 DI-180 DI-181 DI-182 DI-183 DI-184 DI-185 DI-186 DI-187 DI-188 DI-189 DI-190 DI-191 DI-192 DI-193 DI-194 DI-195 DI-196 DI-197 DI-198 DI-199 DI-200 DI-201 DI-202 DI-203 DI-204 DI-205 DI-206 DI-207 DI-208 DI-209 DI-210 DI-211 DI-212 DI-213 DI-214 DI-215 DI-216 DI-217 DI-218 DI-219 DI-220 DI-221 DI-222 DI-223 DI-224 DI-225 DI-226 DI-227 DI-228 DI-229 DI-230 DI-231 DI-232 DI-233 DI-234 DI-235 DI-236 DI-237 DI-238 DI-239 DI-240 DI-241 DI-242 DI-243 DI-244 DI-245 DI-246 DI-247 DI-248 DI-249 DI-250 DI-251 DI-252 DI-253 DI-254 DI-255 DI-256 DI-257 DI-258 DI-259 DI-260 DI-261 DI-262 DI-263 DI-264 DI-265 DI-266 DI-267 DI-268 DI-269

SEE SHEET C6.202

SEE SHEET C6.204

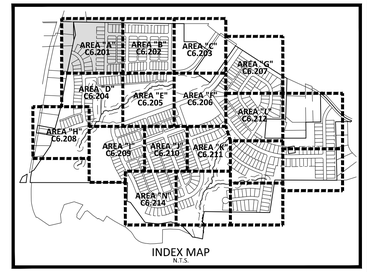

INDEX MAP
N.T.S.

EROSION CONTROL LEGEND

- SILT FENCE OUTLET
- INLET PROTECTION
- INLET PROTECTION FOR EXISTING STRUCTURES
- TEMPORARY SLOPE DRAIN
- FILTER BERM
- CHECK DAM
- SF — SF — SF — SILT FENCE
- TP — TP — TP — TREE PROTECTION FENCE
- LD — LD — LIMITS OF DISTURBANCE
- TP/LD — TP/LD — TREE PROTECTION FENCE/ LIMITS OF DISTURBANCE
- WOODED AREA
- DIVERSION DITCH
- CONSTRUCTION ENTRANCE/EXIT

SEE SHEET C0.01 FOR ALL PROJECT, SITE, GRADING, STORM DRAINAGE AND UTILITY NOTES

GRAPHIC SCALE
0 20 40 80
1 inch = 40 ft.

FINAL DRAWING - NOT RELEASED FOR CONSTRUCTION

MCADAMS
The John R. McAdams Company, Inc.
2905 Meridian Parkway
Durham, NC 27713

phone 919. 361. 5000
fax 919. 361. 2269
license number: C-0293, C-187

www.mcadamsco.com

CLIENT

ALLIANCE GROUP OF NC, LLC
7208 FALLS OF NEUSE RD, SUITE 101
RALEIGH, NORTH CAROLINA 27615
CONTACT: JACOB ANDERSON
PHONE: 919. 239. 9486

AGNC BROKERAGE | CONSULTING | PLANNING

PEARCE FARM - PHASES 1-3
CONSTRUCTION DRAWINGS - PACKAGE 1
BURLINGTON MILLS ROAD
TOWN OF ROLESVILLE, NORTH CAROLINA

CID-24-08

NORTH CAROLINA PROFESSIONAL ENGINEER SEAL 22630 WILLIAM T. O'DANIEL

REVISIONS

NO.	DATE	
1	02. 03. 2025	REVISED PER TOWN, CITY AND COUNTY COMMENTS

PLAN INFORMATION

PROJECT NO.	AGN23001
FILENAME	AGN23001-EC2
CHECKED BY	.
DRAWN BY	.
SCALE	1"=40'
DATE	12. 02. 2024

SHEET

EROSION CONTROL PLAN STAGE 2 AREA "A"

C6.201

X:\Projects\AGN\AGN23001\04-Production\Engineering\Construction Drawings\Current Drawings\AGN23001-EC2.dwg, 1/30/2025 9:30:32 AM, Sherrill Williams

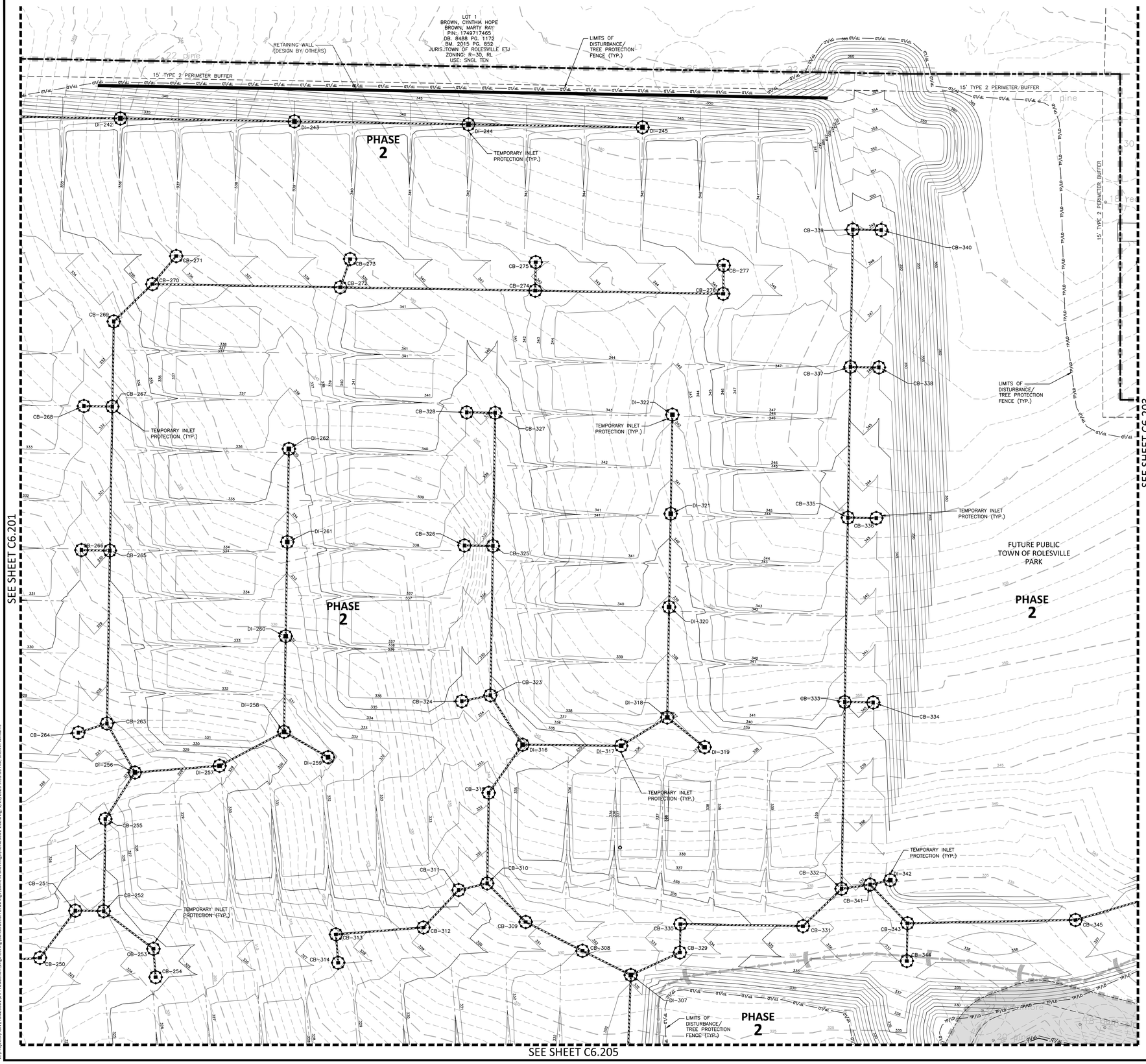

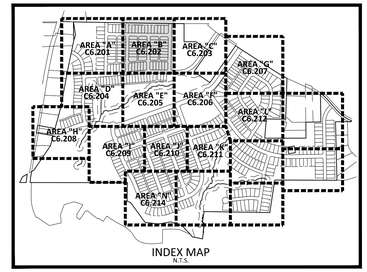

INDEX MAP
N.T.S.

EROSION CONTROL LEGEND

- SILT FENCE OUTLET
- INLET PROTECTION
- INLET PROTECTION FOR EXISTING STRUCTURES
- TEMPORARY SLOPE DRAIN
- FILTER BERM
- CHECK DAM
- SF — SF — SF — SILT FENCE
- TP — TP — TP — TREE PROTECTION FENCE
- LD — LD — LIMITS OF DISTURBANCE
- TP/LD — TP/LD — TREE PROTECTION FENCE/ LIMITS OF DISTURBANCE
- WOODED AREA
- DIVERSION DITCH
- CONSTRUCTION ENTRANCE/EXIT

SEE SHEET C0.01 FOR ALL PROJECT, SITE, GRADING, STORM DRAINAGE AND UTILITY NOTES

GRAPHIC SCALE
0 20 40 80
1 inch = 40 ft.

FINAL DRAWING - NOT RELEASED FOR CONSTRUCTION

McADAMS
The John R. McAdams Company, Inc.
2905 Meridian Parkway
Durham, NC 27713

phone 919. 361. 5000
fax 919. 361. 2269
license number: C-0293, C-187

www.mcadamsco.com

CLIENT

ALLIANCE GROUP OF NC, LLC
7208 FALLS OF NEUSE RD, SUITE 101
RALEIGH, NORTH CAROLINA 27615
CONTACT: JACOB ANDERSON
PHONE: 919. 239. 9486

AGNC BROKERAGE | CONSULTING | PLANNING

PEARCE FARM - PHASES 1-3
CONSTRUCTION DRAWINGS - PACKAGE 1
BURLINGTON MILLS ROAD
TOWN OF ROLESVILLE, NORTH CAROLINA

CID-24-08

NORTH CAROLINA PROFESSIONAL ENGINEER SEAL 22630 WILLIAM T. O'DANIEL — PRELIMINARY NOT FOR CONSTRUCTION

REVISIONS

NO.	DATE	
1	02. 03. 2025	REVISED PER TOWN, CITY AND COUNTY COMMENTS

PLAN INFORMATION

PROJECT NO.	AGN23001
FILENAME	AGN23001-EC2
CHECKED BY	.
DRAWN BY	.
SCALE	1"=40'
DATE	12. 02. 2024

SHEET

EROSION CONTROL PLAN STAGE 2 AREA "B"

C6.202

X:\Projects\AGN\AGN23001\04-Production\Engineering\Construction Drawings\Current Drawing\AGN23001-EC2.dwg, 1/29/2025 9:31:16 AM, Sherrill Williams

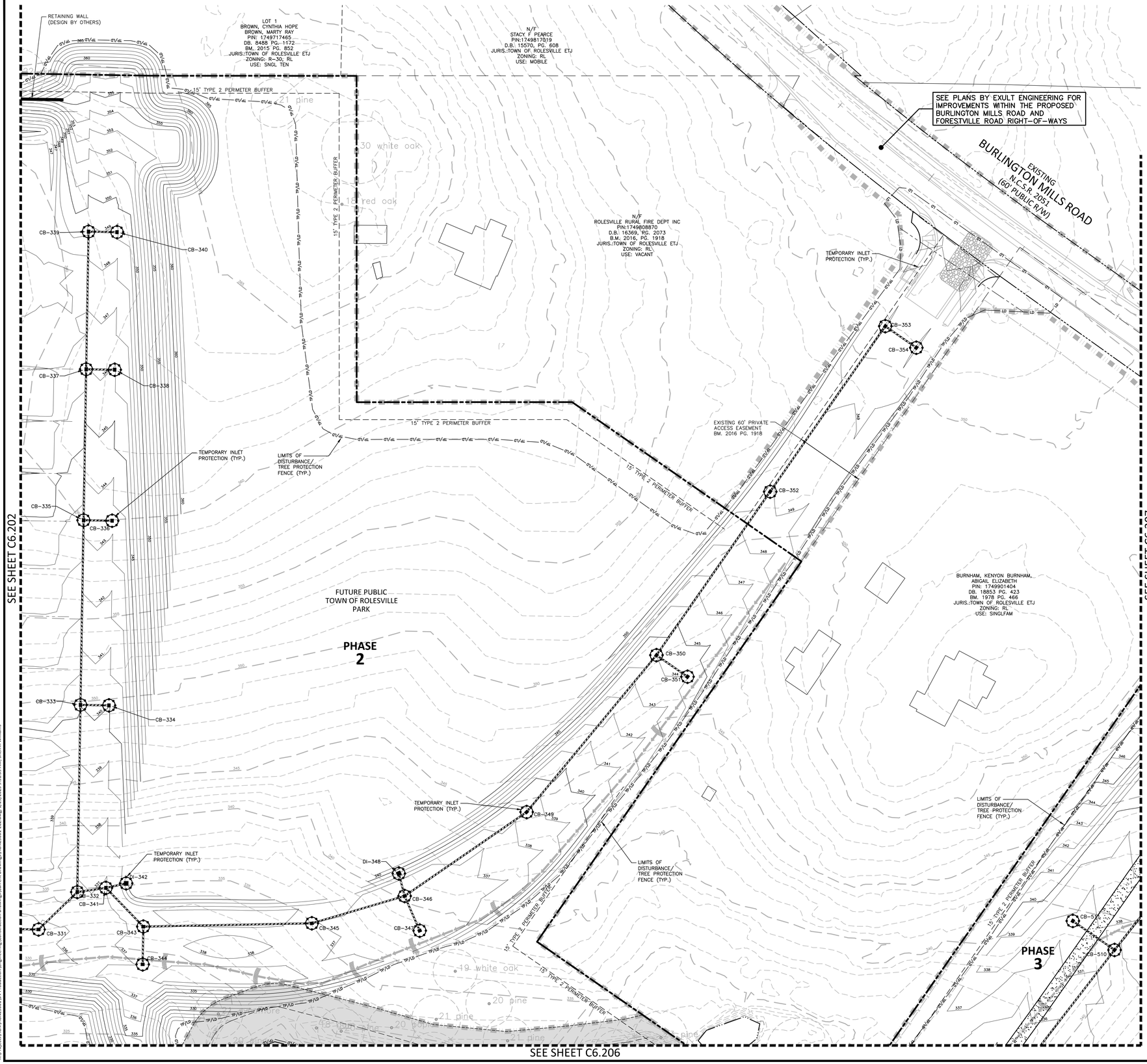

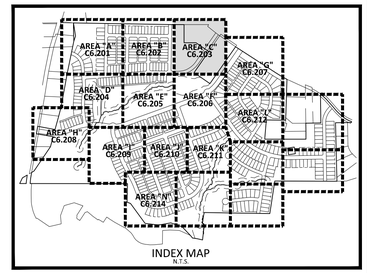

INDEX MAP
N.T.S.

EROSION CONTROL LEGEND

- SILT FENCE OUTLET
- INLET PROTECTION
- INLET PROTECTION FOR EXISTING STRUCTURES
- TEMPORARY SLOPE DRAIN
- FILTER BERM
- CHECK DAM
- SILT FENCE (SF)
- TREE PROTECTION FENCE (TP)
- LIMITS OF DISTURBANCE (LD)
- TREE PROTECTION FENCE/ LIMITS OF DISTURBANCE (TP/LD)
- WOODED AREA
- DIVERSION DITCH
- CONSTRUCTION ENTRANCE/EXIT

SEE SHEET C0.01 FOR ALL PROJECT, SITE, GRADING, STORM DRAINAGE AND UTILITY NOTES

GRAPHIC SCALE
0 20 40 80
1 inch = 40 ft.

FINAL DRAWING - NOT RELEASED FOR CONSTRUCTION

McADAMS
The John R. McAdams Company, Inc.
2905 Meridian Parkway
Durham, NC 27713

phone 919. 361. 5000
fax 919. 361. 2269
license number: C-0293, C-187

www.mcadamsco.com

CLIENT

ALLIANCE GROUP OF NC, LLC
7208 FALLS OF NEUSE RD, SUITE 101
RALEIGH, NORTH CAROLINA 27615
CONTACT: JACOB ANDERSON
PHONE: 919. 239. 9486

AGNC BROKERAGE | CONSULTING | PLANNING

PEARCE FARM - PHASES 1-3
CONSTRUCTION DRAWINGS - PACKAGE 1
BURLINGTON MILLS ROAD
TOWN OF ROLESVILLE, NORTH CAROLINA

CID-24-08

NORTH CAROLINA PROFESSIONAL ENGINEER SEAL 22630 WILLIAM T. O'DANIEL NOTARIZED

REVISIONS

NO.	DATE	
1	02. 03. 2025	REVISED PER TOWN, CITY AND COUNTY COMMENTS

PLAN INFORMATION

PROJECT NO.	AGN23001
FILENAME	AGN23001-EC2
CHECKED BY	.
DRAWN BY	.
SCALE	1"=40'
DATE	12. 02. 2024

SHEET

EROSION CONTROL PLAN STAGE 2 AREA "C"

C6.203

X:\Projects\AGN\AGN23001\04-Production\Engineering\Construction Drawings\Current Drawings\AGN23001-EC2.dwg, 1/29/2025 9:31:59 AM, Sherrill Williams

SEE SHEET C6.201

SEE SHEET C6.205

SEE SHEET C6.208

SEE SHEET C6.209

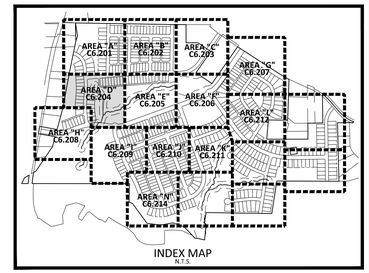

INDEX MAP
N.T.S.

EROSION CONTROL LEGEND

- SILT FENCE OUTLET
- INLET PROTECTION
- INLET PROTECTION FOR EXISTING STRUCTURES
- TEMPORARY SLOPE DRAIN
- FILTER BERM
- CHECK DAM
- SF — SF — SF — SILT FENCE
- TP — TP — TP — TREE PROTECTION FENCE
- LD — LD — LIMITS OF DISTURBANCE
- TP/LD — TP/LD — TREE PROTECTION FENCE/ LIMITS OF DISTURBANCE
- WOODED AREA
- DIVERSION DITCH
- CONSTRUCTION ENTRANCE/EXIT

SEE SHEET C0.01 FOR ALL PROJECT, SITE, GRADING, STORM DRAINAGE AND UTILITY NOTES

GRAPHIC SCALE
0 20 40 80
1 inch = 40 ft.

FINAL DRAWING - NOT RELEASED FOR CONSTRUCTION

McADAMS
The John R. McAdams Company, Inc.
2905 Meridian Parkway
Durham, NC 27713

phone 919. 361. 5000
fax 919. 361. 2269
license number: C-0293, C-187

www.mcadamsco.com

CLIENT

ALLIANCE GROUP OF NC, LLC
7208 FALLS OF NEUSE RD, SUITE 101
RALEIGH, NORTH CAROLINA 27615
CONTACT: JACOB ANDERSON
PHONE: 919. 239. 9486

AGNC BROKERAGE | CONSULTING | PLANNING

PEARCE FARM - PHASES 1-3
CONSTRUCTION DRAWINGS - PACKAGE 1

BURLINGTON MILLS ROAD
TOWN OF ROLESVILLE, NORTH CAROLINA

CID-24-08

NORTH CAROLINA PROFESSIONAL ENGINEER SEAL 22630 WILLIAM F. O'DANIEL — NOT FOR CONSTRUCTION

REVISIONS

NO.	DATE	
1	02. 03. 2025	REVISED PER TOWN, CITY AND COUNTY COMMENTS

PLAN INFORMATION

PROJECT NO.	AGN23001
FILENAME	AGN23001-EC2
CHECKED BY	.
DRAWN BY	.
SCALE	1"=40'
DATE	12. 02. 2024

SHEET

EROSION CONTROL PLAN
STAGE 2
AREA "D"

C6.204

X:\Projects\AGN\AGN23001\04-Production\Engineering\Construction Drawings\Current Drawings\AGN23001-EC2.dwg, 1/29/2025 9:32:38 AM, Sherrill Williams

SEE SHEET C6.202

SEE SHEET C6.204

SEE SHEET C6.206

SEE SHEET C6.210

PUBLIC PARK

PHASE 2

PHASE 2

PHASE 3

PHASE 3

PHASE 3

EXISTING POND DAM TO BE BREACHED

ACTIVE OPEN SPACE

STORMWATER CONTROL MEASURE "A"

TEMPORARY INLET PROTECTION (TYP.)

RETAINING WALL (DESIGN BY OTHERS)

LIMITS OF DISTURBANCE/ TREE PROTECTION FENCE (TYP.)

EX. WETLANDS (TYP)

TOP OF BANK (TYP.)

50' NEUSE RIPARIAN BUFFER (MEASURED 50' FROM TOP OF BANK, EACH SIDE)

ZONE 1

ZONE 2

CB-250 CB-251 CB-252 CB-254 CB-308 CB-309 CB-310 CB-311 CB-312 CB-313 CB-314 CB-329 CB-330 CB-331 CB-332 CB-341 CB-342 CB-343 CB-344 CB-435 CB-436 CB-437 CB-438 CB-439 CB-441 CB-442 CB-443 CB-444 CB-445 CB-446 CB-496 CB-497 CB-498 CB-499

DI-204 DI-303 DI-304 DI-305 DI-306 DI-307 DI-308 DI-424 DI-425 DI-426 DI-427

JB-301

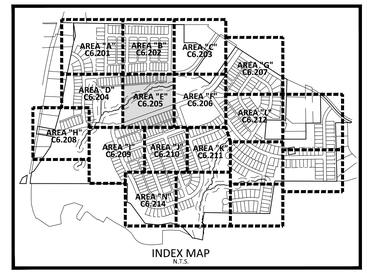

INDEX MAP
N.T.S.

EROSION CONTROL LEGEND

- SILT FENCE OUTLET
- INLET PROTECTION
- INLET PROTECTION FOR EXISTING STRUCTURES
- TEMPORARY SLOPE DRAIN
- FILTER BERM
- CHECK DAM
- SF — SF — SF — SILT FENCE
- TP — TP — TP — TREE PROTECTION FENCE
- LD — LD — LIMITS OF DISTURBANCE
- TP/LD — TP/LD — TREE PROTECTION FENCE/ LIMITS OF DISTURBANCE
- WOODED AREA
- DIVERSION DITCH
- CONSTRUCTION ENTRANCE/EXIT

SEE SHEET C0.01 FOR ALL PROJECT, SITE, GRADING, STORM DRAINAGE AND UTILITY NOTES

GRAPHIC SCALE
0 20 40 80
1 inch = 40 ft.

FINAL DRAWING - NOT RELEASED FOR CONSTRUCTION

McADAMS
The John R. McAdams Company, Inc.
2905 Meridian Parkway
Durham, NC 27713

phone 919. 361. 5000
fax 919. 361. 2269
license number: C-0293, C-187

www.mcadamsco.com

CLIENT

ALLIANCE GROUP OF NC, LLC
7208 FALLS OF NEUSE RD, SUITE 101
RALEIGH, NORTH CAROLINA 27615
CONTACT: JACOB ANDERSON
PHONE: 919. 239. 9486

AGNC BROKERAGE | CONSULTING | PLANNING

PEARCE FARM - PHASES 1-3
CONSTRUCTION DRAWINGS - PACKAGE 1

BURLINGTON MILLS ROAD
TOWN OF ROLESVILLE, NORTH CAROLINA

CID-24-08

NORTH CAROLINA PROFESSIONAL ENGINEER SEAL 22630 WILLIAM T. O'DANIEL — NOT RELEASED FOR CONSTRUCTION

REVISIONS

NO.	DATE	
1	02. 03. 2025	REVISED PER TOWN, CITY AND COUNTY COMMENTS

PLAN INFORMATION

PROJECT NO.	AGN23001
FILENAME	AGN23001-EC2
CHECKED BY	.
DRAWN BY	.
SCALE	1"=40'
DATE	12. 02. 2024

SHEET

EROSION CONTROL PLAN STAGE 2 AREA "E"

C6.205

X:\Projects\AGN\AGN23001\04-Production\[Engineering\Construction Drawings\Current Drawings\AGN23001-EC2.dwg, 1/29/2025 9:33:21 AM, Sherrill Williams

SEE SHEET C6.203

SEE SHEET C6.205

SEE SHEET C6.207

SEE SHEET C6.210

SEE SHEET C6.211

EXISTING POND
DAM TO BE BREACHED

LIMITS OF DISTURBANCE/ TREE PROTECTION FENCE (TYP.)

BURNHAM, KENYON BURNHAM, ABIGAIL ELIZABETH
PIN: 9749901404
DB. 18853 PG. 423
BM. 1978 PG. 466
JURIS.:TOWN OF ROLESVILLE ETJ
ZONING: RL
USE: SINGLFAM

50' NEUSE RIPARIAN BUFFER (MEASURED 50' FROM TOP OF BANK, EACH SIDE)

ACTIVE OPEN SPACE

MAIN AMENITY

TEMPORARY INLET PROTECTION (TYP.)

CB-495 CB-496 CB-497 CB-498 CB-499 CB-500 CB-501 CB-502 CB-503 CB-504 CB-505 CB-506 CB-507 CB-508 CB-509

DI-473 DI-474 DI-487 DI-488 DI-489 DI-490 DI-491 DI-492 DI-493 DI-494

CB-521 CB-522 CB-523 CB-524 CB-525 CB-526 CB-527 CB-528 CB-531 CB-532 CB-533 CB-534 CB-535 CB-536

DI-537 DI-539 DI-540 DI-541 DI-542 DI-543 DI-544 DI-545

PHASE 3

PHASE 4

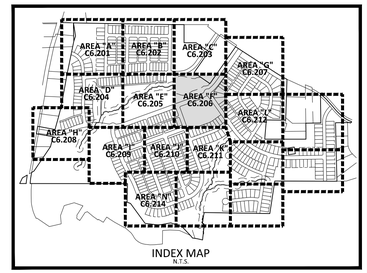

INDEX MAP
N.T.S.

EROSION CONTROL LEGEND

- SILT FENCE OUTLET
- INLET PROTECTION
- INLET PROTECTION FOR EXISTING STRUCTURES
- TEMPORARY SLOPE DRAIN
- FILTER BERM
- CHECK DAM
- SF — SF — SF — SILT FENCE
- TP — TP — TP — TREE PROTECTION FENCE
- LD — LD — LIMITS OF DISTURBANCE
- TP/LD — TP/LD — TREE PROTECTION FENCE/ LIMITS OF DISTURBANCE
- WOODED AREA
- DIVERSION DITCH
- CONSTRUCTION ENTRANCE/EXIT

SEE SHEET C0.01 FOR ALL PROJECT, SITE, GRADING, STORM DRAINAGE AND UTILITY NOTES

GRAPHIC SCALE
0 20 40 80
1 inch = 40 ft.

FINAL DRAWING - NOT RELEASED FOR CONSTRUCTION

McADAMS
The John R. McAdams Company, Inc.
2905 Meridian Parkway
Durham, NC 27713

phone 919. 361. 5000
fax 919. 361. 2269
license number: C-0293, C-187

www.mcadamsco.com

CLIENT

ALLIANCE GROUP OF NC, LLC
7208 FALLS OF NEUSE RD, SUITE 101
RALEIGH, NORTH CAROLINA 27615
CONTACT: JACOB ANDERSON
PHONE: 919. 239. 9486

AGNC BROKERAGE | CONSULTING | PLANNING

PEARCE FARM - PHASES 1-3
CONSTRUCTION DRAWINGS - PACKAGE 1

BURLINGTON MILLS ROAD
TOWN OF ROLESVILLE, NORTH CAROLINA

CID-24-08

NORTH CAROLINA PROFESSIONAL ENGINEER SEAL 22630 LICENSED WILLIAM T. O'DANIEL NOT FOR CONSTRUCTION

REVISIONS

NO.	DATE	
1	02. 03. 2025	REVISED PER TOWN, CITY AND COUNTY COMMENTS

PLAN INFORMATION

PROJECT NO.	AGN23001
FILENAME	AGN23001-EC2
CHECKED BY	.
DRAWN BY	.
SCALE	1"=40'
DATE	12. 02. 2024

SHEET

EROSION CONTROL PLAN
STAGE 2
AREA "F"

C6.206

X:\Projects\AGN\AGN23001\04-Production\Engineering\Construction Drawings\Current Drawings\AGN23001-EC2.dwg, 1/29/2025 9:33:58 AM, Sherrill Williams

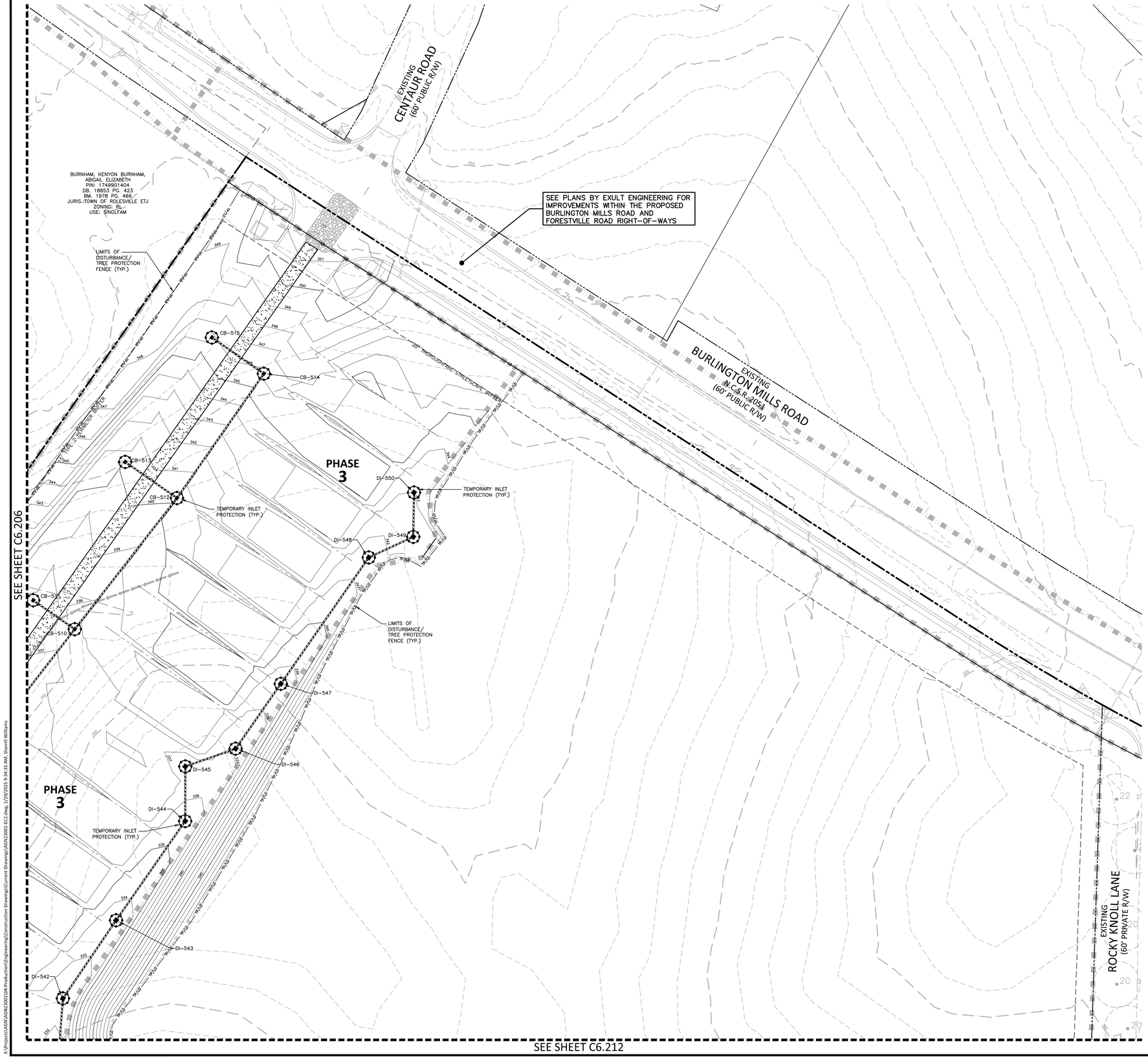

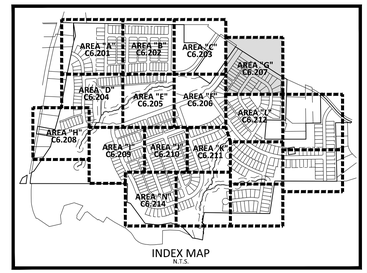

INDEX MAP
N.T.S.

EROSION CONTROL LEGEND

- SILT FENCE OUTLET
- INLET PROTECTION
- INLET PROTECTION FOR EXISTING STRUCTURES
- TEMPORARY SLOPE DRAIN
- FILTER BERM
- CHECK DAM
- SF — SF — SF — SILT FENCE
- TP — TP — TP — TREE PROTECTION FENCE
- LD — LD — LIMITS OF DISTURBANCE
- TP/LD — TP/LD — TREE PROTECTION FENCE/ LIMITS OF DISTURBANCE
- WOODED AREA
- DIVERSION DITCH
- CONSTRUCTION ENTRANCE/EXIT

SEE SHEET C0.01 FOR ALL PROJECT, SITE, GRADING, STORM DRAINAGE AND UTILITY NOTES

GRAPHIC SCALE
0 20 40 80
1 inch = 40 ft.

FINAL DRAWING - NOT RELEASED FOR CONSTRUCTION

McADAMS
The John R. McAdams Company, Inc.
2905 Meridian Parkway
Durham, NC 27713

phone 919. 361. 5000
fax 919. 361. 2269
license number: C-0293, C-187

www.mcadamsco.com

CLIENT

ALLIANCE GROUP OF NC, LLC
7208 FALLS OF NEUSE RD, SUITE 101
RALEIGH, NORTH CAROLINA 27615
CONTACT: JACOB ANDERSON
PHONE: 919. 239. 9486

AGNC BROKERAGE | CONSULTING | PLANNING

PEARCE FARM - PHASES 1-3
CONSTRUCTION DRAWINGS - PACKAGE 1
BURLINGTON MILLS ROAD
TOWN OF ROLESVILLE, NORTH CAROLINA

CID-24-08

NORTH CAROLINA PROFESSIONAL ENGINEER SEAL 22630 LICENSED WILLIAM T. O'DANIEL

REVISIONS

NO.	DATE	
1	02. 03. 2025	REVISED PER TOWN, CITY AND COUNTY COMMENTS

PLAN INFORMATION

PROJECT NO.	AGN23001
FILENAME	AGN23001-EC2
CHECKED BY	.
DRAWN BY	.
SCALE	1"=40'
DATE	12. 02. 2024

SHEET

EROSION CONTROL PLAN STAGE 2 AREA "G"

C6.207

X:\Projects\AGN\AGN23001\04-Production\Engineering\Construction Drawings\Current Drawings\AGN23001-EC2.dwg, 1/29/2025 9:34:35 AM, Sherrill Williams

SEE SHEET C6.204

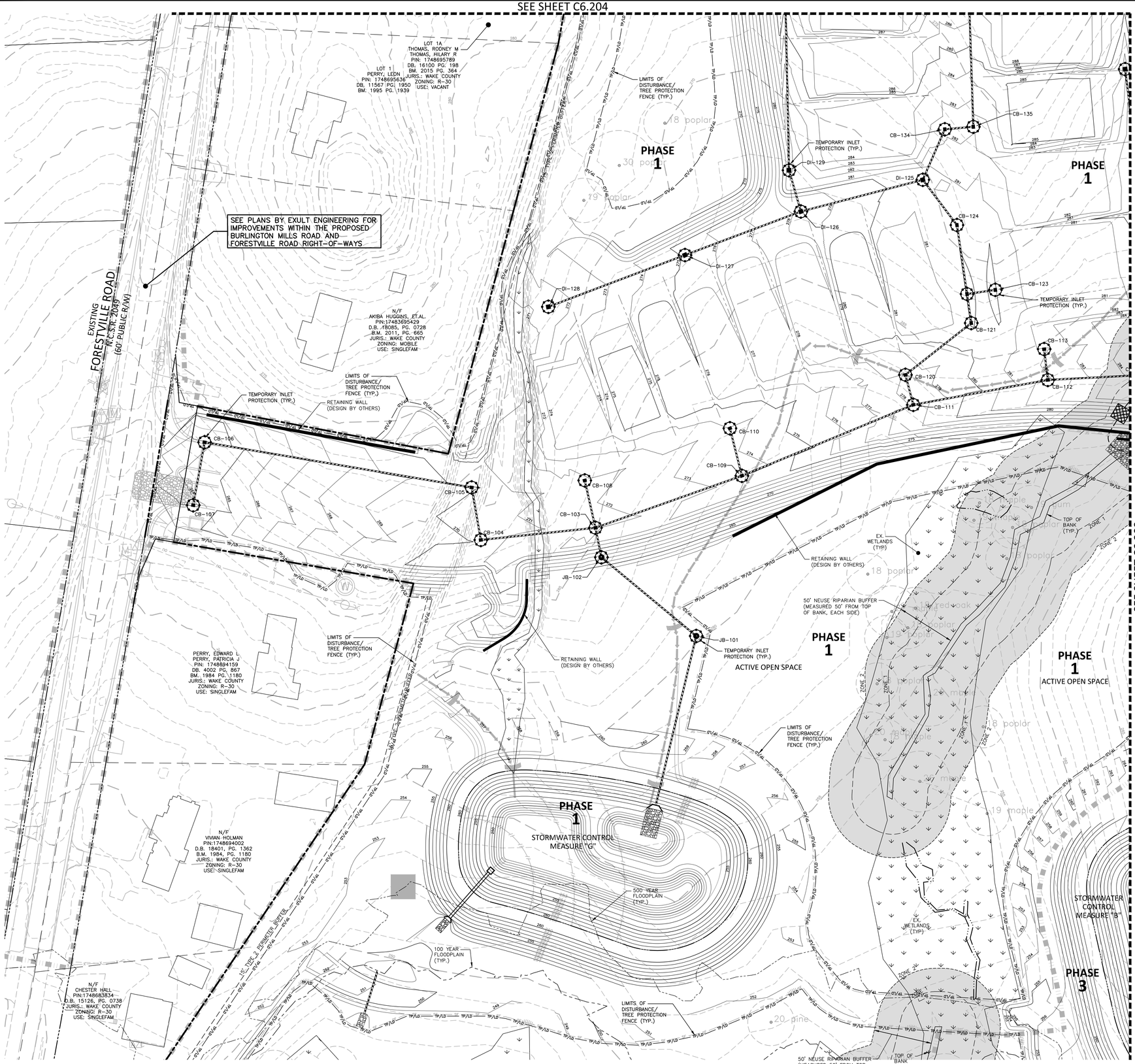

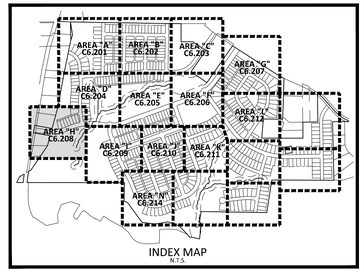

EROSION CONTROL LEGEND

- SILT FENCE OUTLET
- INLET PROTECTION
- INLET PROTECTION FOR EXISTING STRUCTURES
- TEMPORARY SLOPE DRAIN
- FILTER BERM
- CHECK DAM
- SF — SF — SF — SILT FENCE
- TP — TP — TP — TREE PROTECTION FENCE
- LD — LD — LIMITS OF DISTURBANCE
- TP/LD — TP/LD — TREE PROTECTION FENCE/ LIMITS OF DISTURBANCE
- WOODED AREA
- DIVERSION DITCH
- CONSTRUCTION ENTRANCE/EXIT

SEE SHEET C0.01 FOR ALL PROJECT, SITE, GRADING, STORM DRAINAGE AND UTILITY NOTES

GRAPHIC SCALE
0 20 40 80
1 inch = 40 ft.

FINAL DRAWING - NOT RELEASED FOR CONSTRUCTION

McADAMS
The John R. McAdams Company, Inc.
2905 Meridian Parkway
Durham, NC 27713

phone 919. 361. 5000
fax 919. 361. 2269
license number: C-0293, C-187

www.mcadamsco.com

CLIENT

ALLIANCE GROUP OF NC, LLC
7208 FALLS OF NEUSE RD, SUITE 101
RALEIGH, NORTH CAROLINA 27615
CONTACT: JACOB ANDERSON
PHONE: 919. 239. 9486

AGNC BROKERAGE | CONSULTING | PLANNING

PEARCE FARM - PHASES 1-3
CONSTRUCTION DRAWINGS - PACKAGE 1
BURLINGTON MILLS ROAD
TOWN OF ROLESVILLE, NORTH CAROLINA

CID-24-08

NORTH CAROLINA PROFESSIONAL ENGINEER SEAL 22630 WILLIAM F. O'DANIEL — NOT FOR CONSTRUCTION

REVISIONS

NO.	DATE	
1	02. 03. 2025	REVISED PER TOWN, CITY AND COUNTY COMMENTS

PLAN INFORMATION

PROJECT NO.	AGN23001
FILENAME	AGN23001-EC2
CHECKED BY	.
DRAWN BY	.
SCALE	1"=40'
DATE	12. 02. 2024

SHEET

EROSION CONTROL PLAN
STAGE 2
AREA "H"

C6.208

X:\Projects\AGN\AGN23001\04-Production\Engineering\Construction Drawings\Current Drawings\AGN23001-EC2.dwg, 1/29/2025 9:35:20 AM, Sherrill Williams

SEE SHEET C6.204

SEE SHEET C6.208

SEE SHEET C6.210

SEE SHEET C6.214

PHASE 1

PHASE 3

PHASE 4

ACTIVE OPEN SPACE

STORMWATER CONTROL MEASURE "B"

TEMPORARY INLET PROTECTION (TYP.)

RETAINING WALL (DESIGN BY OTHERS)

LIMITS OF DISTURBANCE/ TREE PROTECTION FENCE (TYP.)

TOP OF BANK (TYP.)

POND ACCESS

50' NEUSE RIPARIAN BUFFER (MEASURED 50' FROM TOP OF BANK/ EACH SIDE)

EX. WETLANDS (TYP.)

500 YEAR FLOODPLAIN (TYP.)

100 YEAR FLOODPLAIN (TYP.)

ZONE 1

ZONE 2

ZONE 2C

CB-111 CB-112 CB-113 CB-114 CB-115 CB-116 CB-117 CB-120 CB-121

CB-401 CB-402 CB-403 CB-404 CB-405 CB-406 CB-407 CB-408 CB-409 CB-410 CB-411 CB-412 CB-413 CB-414 CB-415 CB-416 CB-417 CB-418 CB-419 CB-420 CB-421 CB-422 CB-428 CB-429 CB-430 CB-431 CB-432 CB-433 CB-434 CB-435

DI-401 DI-402 DI-403 DI-404 DI-405 DI-406 DI-407 DI-408 DI-409A DI-410 DI-411 DI-412 DI-413 DI-414 DI-415 DI-416 DI-417 DI-418 DI-419 DI-420 DI-421 DI-422 DI-447 DI-448 DI-449

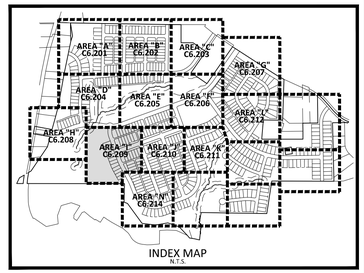

INDEX MAP
N.T.S.

EROSION CONTROL LEGEND

- SILT FENCE OUTLET
- INLET PROTECTION
- INLET PROTECTION FOR EXISTING STRUCTURES
- TEMPORARY SLOPE DRAIN
- FILTER BERM
- CHECK DAM
- SF — SF — SF — SILT FENCE
- TP — TP — TP — TREE PROTECTION FENCE
- LD — LD — LIMITS OF DISTURBANCE
- TP/LD — TP/LD — TREE PROTECTION FENCE/ LIMITS OF DISTURBANCE
- WOODED AREA
- DIVERSION DITCH
- CONSTRUCTION ENTRANCE/EXIT

SEE SHEET C0.01 FOR ALL PROJECT, SITE, GRADING, STORM DRAINAGE AND UTILITY NOTES

GRAPHIC SCALE
0 20 40 80
1 inch = 40 ft.

FINAL DRAWING - NOT RELEASED FOR CONSTRUCTION

McADAMS
The John R. McAdams Company, Inc.
2905 Meridian Parkway
Durham, NC 27713

phone 919. 361. 5000
fax 919. 361. 2269
license number: C-0293, C-187

www.mcadamsco.com

CLIENT

ALLIANCE GROUP OF NC, LLC
7208 FALLS OF NEUSE RD, SUITE 101
RALEIGH, NORTH CAROLINA 27615
CONTACT: JACOB ANDERSON
PHONE: 919. 239. 9486

AGNC BROKERAGE | CONSULTING | PLANNING

PEARCE FARM - PHASES 1-3
CONSTRUCTION DRAWINGS - PACKAGE 1

BURLINGTON MILLS ROAD
TOWN OF ROLESVILLE, NORTH CAROLINA

CID-24-08

NORTH CAROLINA PROFESSIONAL ENGINEER SEAL 22630 WILLIAM F. O'DANIEL — NOT FOR CONSTRUCTION

REVISIONS

NO.	DATE	
1	02. 03. 2025	REVISED PER TOWN, CITY AND COUNTY COMMENTS

PLAN INFORMATION

PROJECT NO.	AGN23001
FILENAME	AGN23001-EC2
CHECKED BY	.
DRAWN BY	.
SCALE	1"=40'
DATE	12. 02. 2024

SHEET

EROSION CONTROL PLAN
STAGE 2
AREA "I"

C6.209

X:\Projects\AGN\AGN23001\04-Production\Engineering\Construction Drawings\Current Drawing\AGN23001-EC2.dwg, 1/29/2025 9:36:01 AM, Sherrill Williams

SEE SHEET C6.206

SEE SHEET C6.209

SEE SHEET C6.211

SEE SHEET C6.214

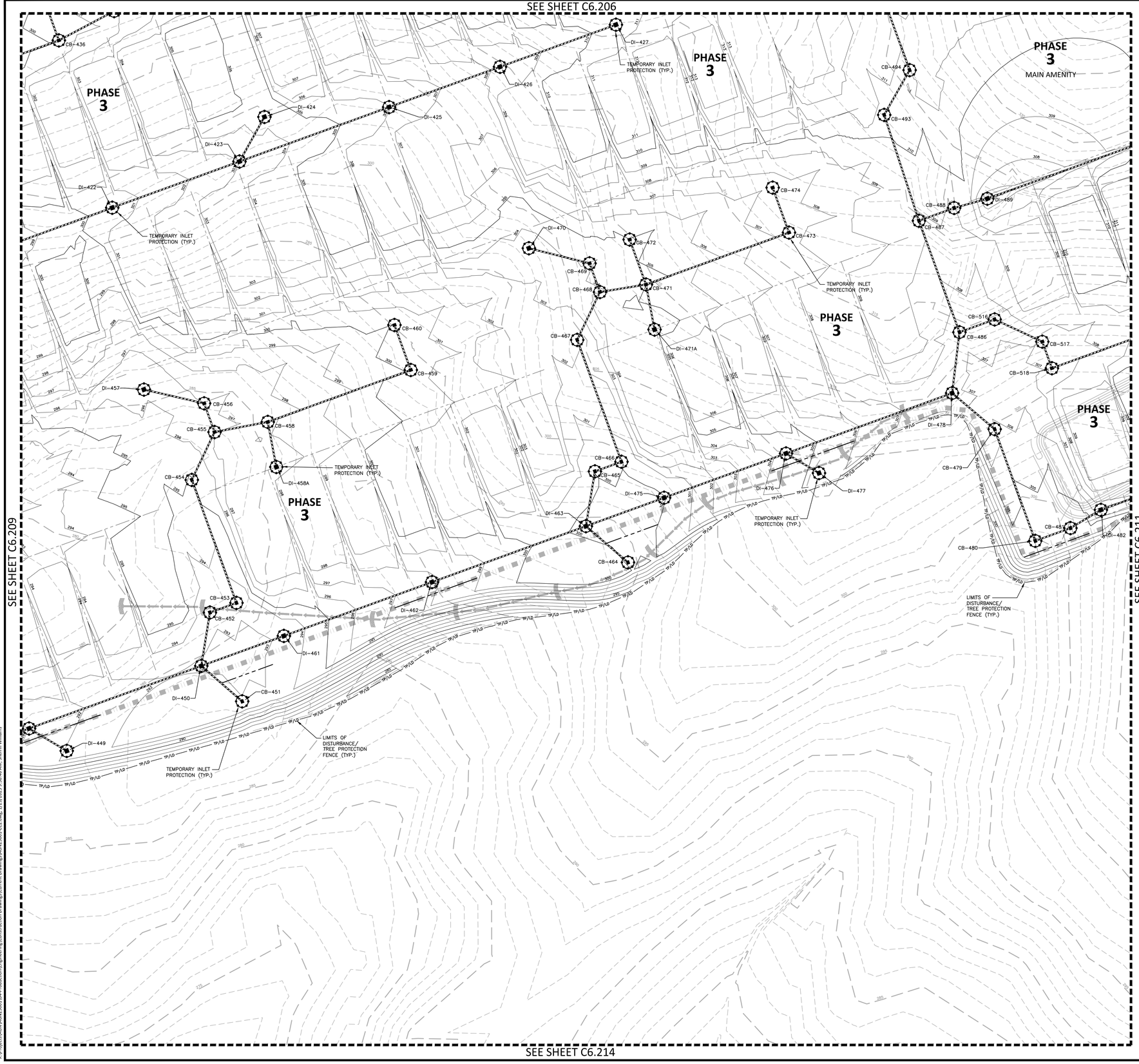

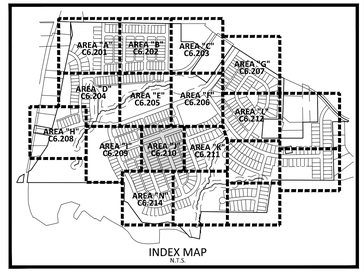

INDEX MAP
N.T.S.

EROSION CONTROL LEGEND

- SILT FENCE OUTLET
- INLET PROTECTION
- INLET PROTECTION FOR EXISTING STRUCTURES
- TEMPORARY SLOPE DRAIN
- FILTER BERM
- CHECK DAM
- SF — SF — SF — SILT FENCE
- TP — TP — TP — TREE PROTECTION FENCE
- LD — LD — LIMITS OF DISTURBANCE
- TP/LD — TP/LD — TREE PROTECTION FENCE/ LIMITS OF DISTURBANCE
- WOODED AREA
- DIVERSION DITCH
- CONSTRUCTION ENTRANCE/EXIT

SEE SHEET C0.01 FOR ALL PROJECT, SITE, GRADING, STORM DRAINAGE AND UTILITY NOTES

GRAPHIC SCALE
0 20 40 80
1 inch = 40 ft.

FINAL DRAWING - NOT RELEASED FOR CONSTRUCTION

McADAMS
The John R. McAdams Company, Inc.
2905 Meridian Parkway
Durham, NC 27713

phone 919. 361. 5000
fax 919. 361. 2269
license number: C-0293, C-187

www.mcadamsco.com

CLIENT

ALLIANCE GROUP OF NC, LLC
7208 FALLS OF NEUSE RD, SUITE 101
RALEIGH, NORTH CAROLINA 27615
CONTACT: JACOB ANDERSON
PHONE: 919. 239. 9486

AGNC BROKERAGE | CONSULTING | PLANNING

PEARCE FARM - PHASES 1-3
CONSTRUCTION DRAWINGS - PACKAGE 1
BURLINGTON MILLS ROAD
TOWN OF ROLESVILLE, NORTH CAROLINA

CID-24-08

NORTH CAROLINA PROFESSIONAL ENGINEER SEAL 22630 WILLIAM F. O'DANIEL — NOT FOR CONSTRUCTION

REVISIONS

NO.	DATE	
1	02. 03. 2025	REVISED PER TOWN, CITY AND COUNTY COMMENTS

PLAN INFORMATION

PROJECT NO.	AGN23001
FILENAME	AGN23001-EC2
CHECKED BY	.
DRAWN BY	.
SCALE	1"=40'
DATE	12. 02. 2024

SHEET

EROSION CONTROL PLAN
STAGE 2
AREA "J"

C6.210

X:\Projects\AGN\AGN23001\04-Production\Engineering\Construction Drawings\Current Drawings\AGN23001-EC2.dwg, 1/29/2025 9:36:46 AM, Sherrill Williams

SEE SHEET C6.206

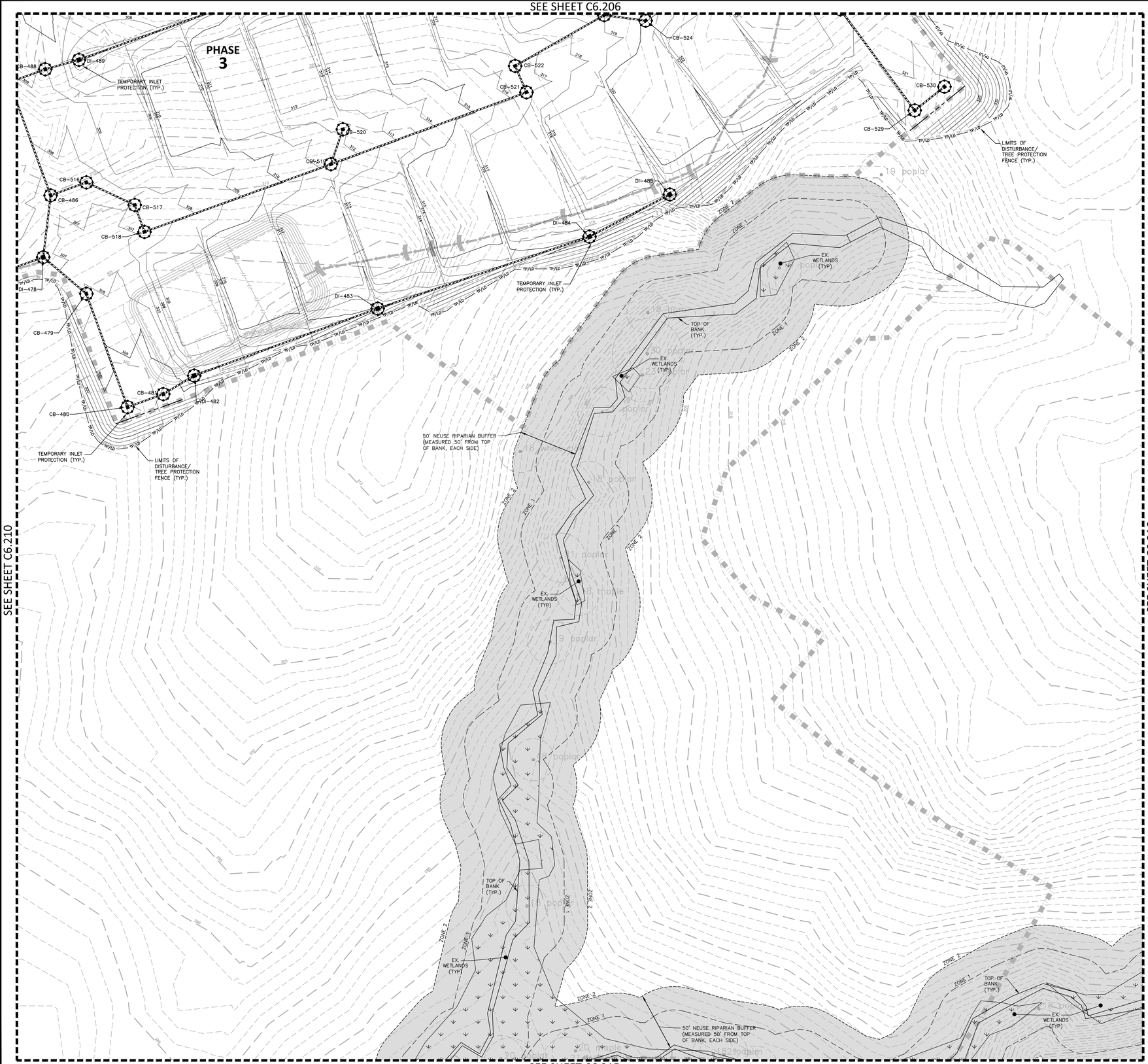

SEE SHEET C6.210

SEE SHEET C6.216

SEE SHEET C6.215

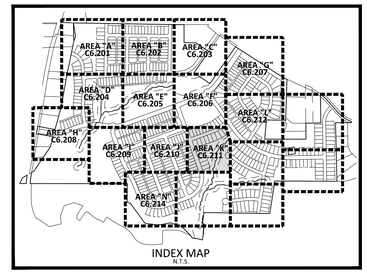

INDEX MAP
N.T.S.

EROSION CONTROL LEGEND

- SILT FENCE OUTLET
- INLET PROTECTION
- INLET PROTECTION FOR EXISTING STRUCTURES
- TEMPORARY SLOPE DRAIN
- FILTER BERM
- CHECK DAM
- SF — SF — SF — SILT FENCE
- TP — TP — TP — TREE PROTECTION FENCE
- LD — LD — LIMITS OF DISTURBANCE
- TP/LD — TP/LD — TREE PROTECTION FENCE/ LIMITS OF DISTURBANCE
- WOODED AREA
- DIVERSION DITCH
- CONSTRUCTION ENTRANCE/EXIT

SEE SHEET C0.01 FOR ALL PROJECT, SITE, GRADING, STORM DRAINAGE AND UTILITY NOTES

GRAPHIC SCALE
0 20 40 80
1 inch = 40 ft.

FINAL DRAWING - NOT RELEASED FOR CONSTRUCTION

McADAMS
The John R. McAdams Company, Inc.
2905 Meridian Parkway
Durham, NC 27713

phone 919. 361. 5000
fax 919. 361. 2269
license number: C-0293, C-187

www.mcadamsco.com

CLIENT

ALLIANCE GROUP OF NC, LLC
7208 FALLS OF NEUSE RD, SUITE 101
RALEIGH, NORTH CAROLINA 27615
CONTACT: JACOB ANDERSON
PHONE: 919. 239. 9486

AGNC BROKERAGE | CONSULTING | PLANNING

PEARCE FARM - PHASES 1-3
CONSTRUCTION DRAWINGS - PACKAGE 1
BURLINGTON MILLS ROAD
TOWN OF ROLESVILLE, NORTH CAROLINA

CID-24-08

NORTH CAROLINA PROFESSIONAL ENGINEER SEAL 22630 WILLIAM F. O'DANIEL — NOT FOR CONSTRUCTION

REVISIONS

NO.	DATE	
1	02. 03. 2025	REVISED PER TOWN, CITY AND COUNTY COMMENTS

PLAN INFORMATION

PROJECT NO.	AGN23001
FILENAME	AGN23001-EC2
CHECKED BY	.
DRAWN BY	.
SCALE	1"=40'
DATE	12. 02. 2024

SHEET

EROSION CONTROL PLAN STAGE 2 AREA "K"

C6.211

X:\Projects\AGN\AGN23001\04-Production\Engineering\Construction Drawings\Current Drawings\AGN23001-EC2.dwg, 1/29/2025 9:37:23 AM, Sherrill Williams

SEE SHEET C6.207

SEE SHEET C6.206

SEE SHEET C6.213

SEE SHEET C6.216

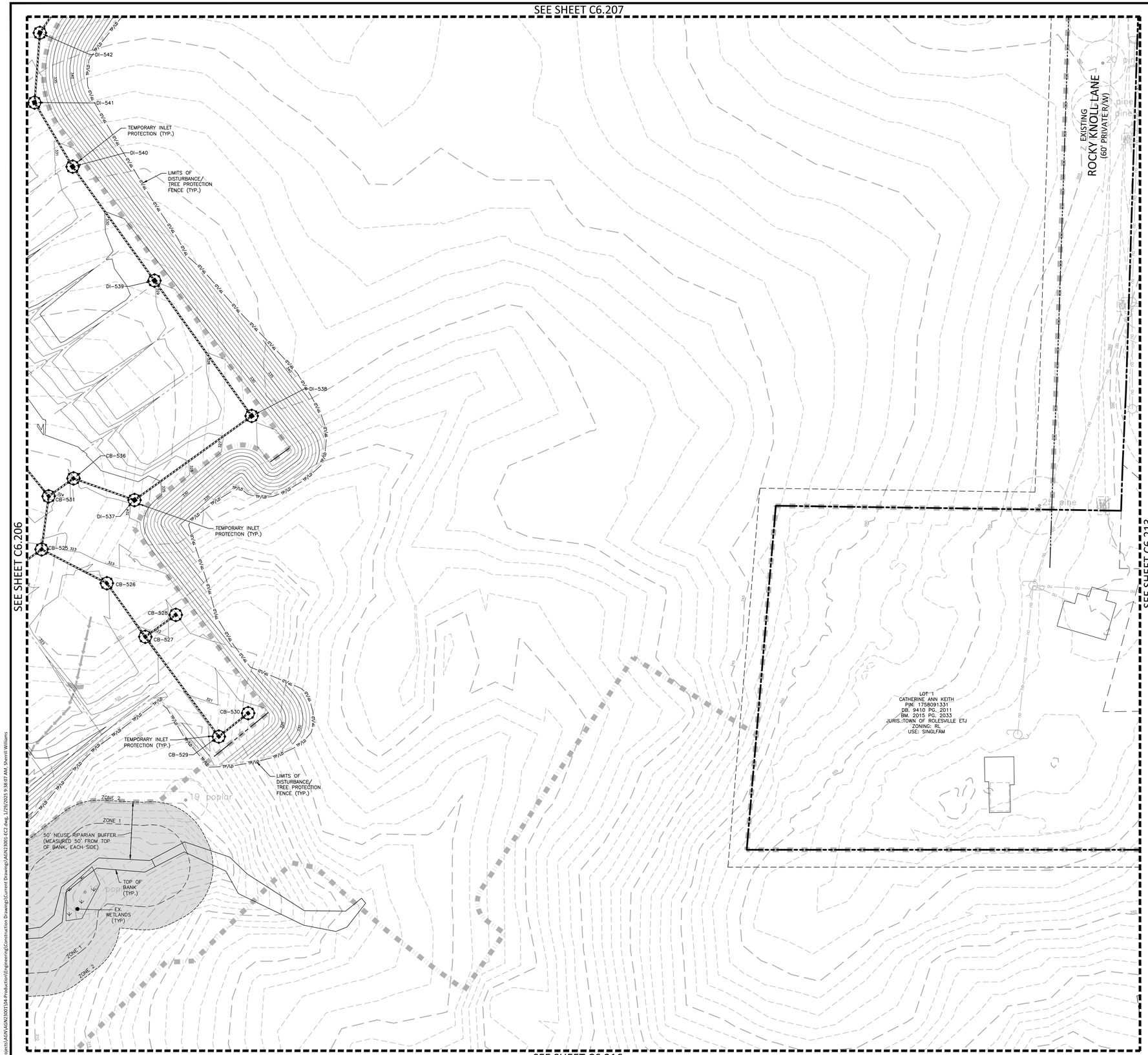

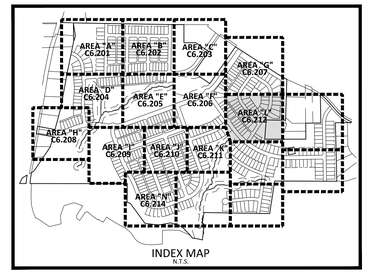

INDEX MAP
N.T.S.

EROSION CONTROL LEGEND

- SILT FENCE OUTLET
- INLET PROTECTION
- INLET PROTECTION FOR EXISTING STRUCTURES
- TEMPORARY SLOPE DRAIN
- FILTER BERM
- CHECK DAM
- SF — SF — SF — SILT FENCE
- TP — TP — TP — TREE PROTECTION FENCE
- LD — LD — LIMITS OF DISTURBANCE
- TP/LD — TP/LD — TREE PROTECTION FENCE/ LIMITS OF DISTURBANCE
- WOODED AREA
- DIVERSION DITCH
- CONSTRUCTION ENTRANCE/EXIT

SEE SHEET C0.01 FOR ALL PROJECT, SITE, GRADING, STORM DRAINAGE AND UTILITY NOTES

GRAPHIC SCALE
0 20 40 80
1 inch = 40 ft.

FINAL DRAWING - NOT RELEASED FOR CONSTRUCTION

McADAMS
The John R. McAdams Company, Inc.
2905 Meridian Parkway
Durham, NC 27713

phone 919. 361. 5000
fax 919. 361. 2269
license number: C-0293, C-187

www.mcadamsco.com

CLIENT

ALLIANCE GROUP OF NC, LLC
7208 FALLS OF NEUSE RD, SUITE 101
RALEIGH, NORTH CAROLINA 27615
CONTACT: JACOB ANDERSON
PHONE: 919. 239. 9486

AGNC BROKERAGE | CONSULTING | PLANNING

PEARCE FARM - PHASES 1-3
CONSTRUCTION DRAWINGS - PACKAGE 1
BURLINGTON MILLS ROAD
TOWN OF ROLESVILLE, NORTH CAROLINA

CID-24-08

NORTH CAROLINA PROFESSIONAL ENGINEER SEAL 22630 WILLIAM T. O'DANIEL — NOT FOR CONSTRUCTION

REVISIONS

NO.	DATE	
1	02. 03. 2025	REVISED PER TOWN, CITY AND COUNTY COMMENTS

PLAN INFORMATION

PROJECT NO.	AGN23001
FILENAME	AGN23001-EC2
CHECKED BY	.
DRAWN BY	.
SCALE	1"=40'
DATE	12. 02. 2024

SHEET

EROSION CONTROL PLAN STAGE 2 AREA "L"

C6.212

X:\Projects\AGN\AGN23001\04-Production\Engineering\Construction Drawings\Current Drawings\AGN23001-EC2.dwg, 1/29/2025 9:38:07 AM, Sherrill Williams

SEE SHEET C6.210

SEE SHEET C6.209

SEE SHEET C6.215

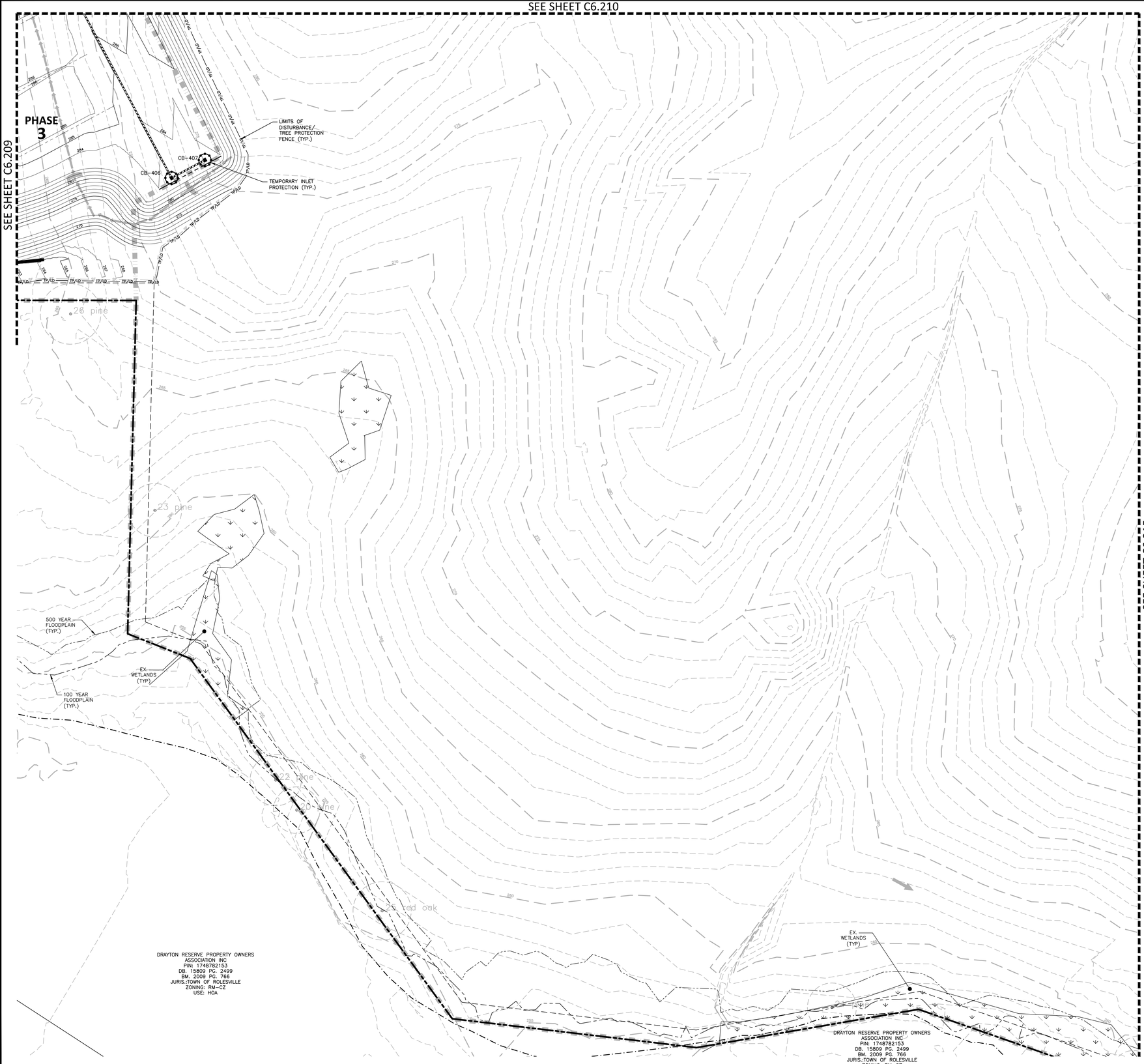

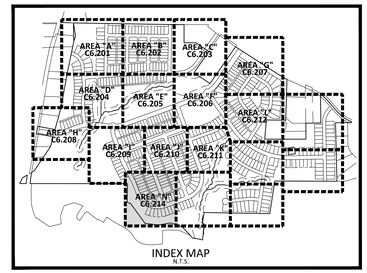

INDEX MAP
N.T.S.

EROSION CONTROL LEGEND

- SILT FENCE OUTLET
- INLET PROTECTION
- INLET PROTECTION FOR EXISTING STRUCTURES
- TEMPORARY SLOPE DRAIN
- FILTER BERM
- CHECK DAM
- SF — SF — SF — SILT FENCE
- TP — TP — TP — TREE PROTECTION FENCE
- LD — LD — LIMITS OF DISTURBANCE
- TP/LD — TP/LD — TREE PROTECTION FENCE/ LIMITS OF DISTURBANCE
- WOODED AREA
- DIVERSION DITCH
- CONSTRUCTION ENTRANCE/EXIT

SEE SHEET C0.01 FOR ALL PROJECT, SITE, GRADING, STORM DRAINAGE AND UTILITY NOTES

GRAPHIC SCALE
0 20 40 80
1 inch = 40 ft.

FINAL DRAWING - NOT RELEASED FOR CONSTRUCTION

McADAMS
The John R. McAdams Company, Inc.
2905 Meridian Parkway
Durham, NC 27713

phone 919. 361. 5000
fax 919. 361. 2269
license number: C-0293, C-187

www.mcadamsco.com

CLIENT

ALLIANCE GROUP OF NC, LLC
7208 FALLS OF NEUSE RD, SUITE 101
RALEIGH, NORTH CAROLINA 27615
CONTACT: JACOB ANDERSON
PHONE: 919. 239. 9486

AGNC BROKERAGE | CONSULTING | PLANNING

PEARCE FARM - PHASES 1-3
CONSTRUCTION DRAWINGS - PACKAGE 1
BURLINGTON MILLS ROAD
TOWN OF ROLESVILLE, NORTH CAROLINA

CID-24-08

NORTH CAROLINA PROFESSIONAL ENGINEER SEAL 22630 WILLIAM F. O'DANIEL — NOT FOR CONSTRUCTION

REVISIONS

NO.	DATE	
1	02. 03. 2025	REVISED PER TOWN, CITY AND COUNTY COMMENTS

PLAN INFORMATION

PROJECT NO.	AGN23001
FILENAME	AGN23001-EC2
CHECKED BY	.
DRAWN BY	.
SCALE	1"=40'
DATE	12. 02. 2024

SHEET

EROSION CONTROL PLAN
STAGE 2
AREA "N"

C6.214

X:\Projects\AGN\AGN23001\04-Production\Engineering\Construction Drawings\Current Drawing\AGN23001-EC2.dwg, 1/29/2025 9:38:59 AM, Sherrill Williams

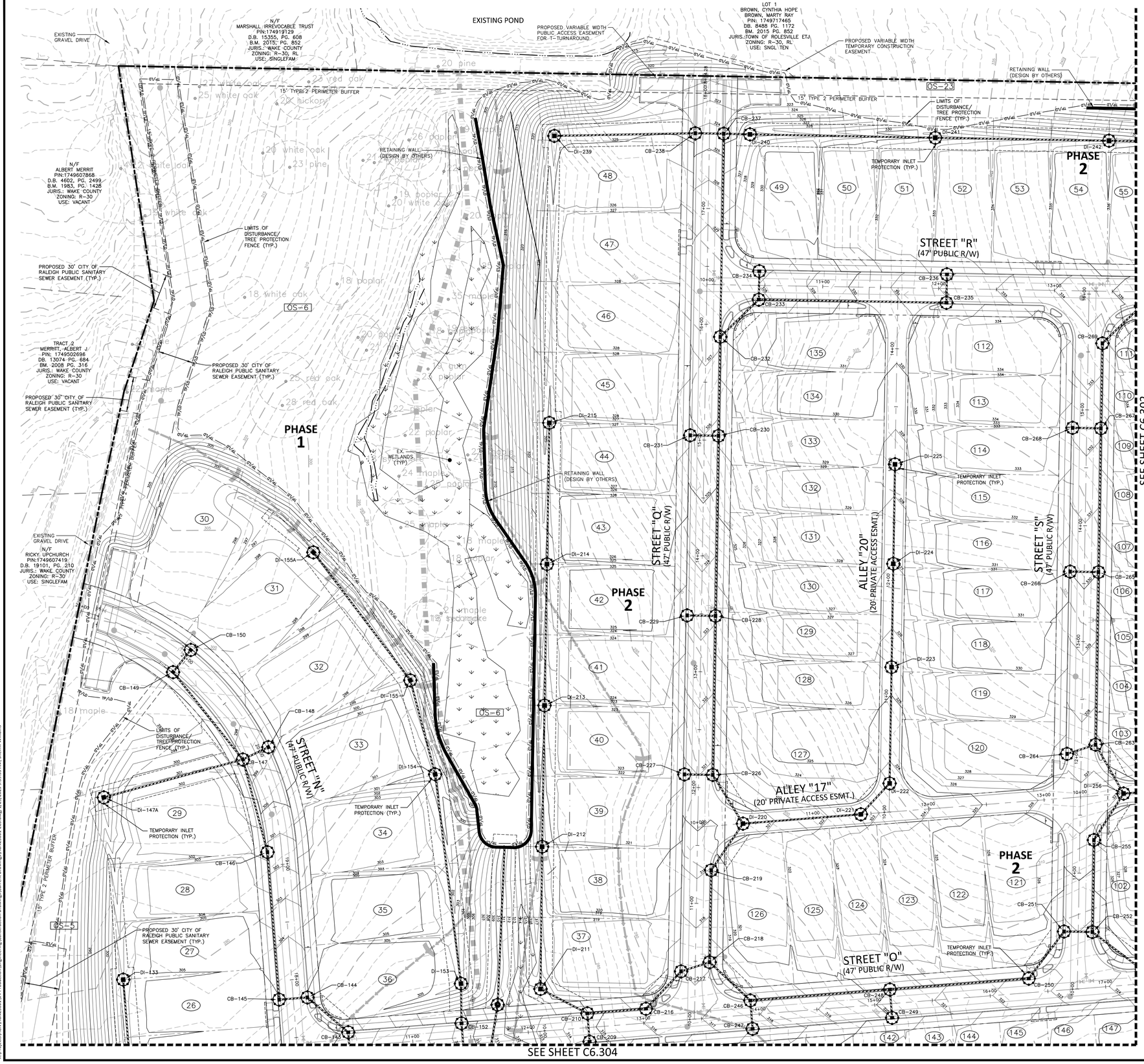

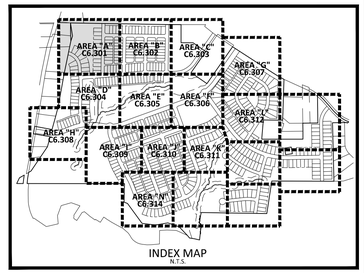

INDEX MAP
N.T.S.

EROSION CONTROL LEGEND

- SILT FENCE OUTLET
- INLET PROTECTION
- INLET PROTECTION FOR EXISTING STRUCTURES
- TEMPORARY SLOPE DRAIN
- FILTER BERM
- CHECK DAM
- SF — SF — SF — SILT FENCE
- TP — TP — TP — TREE PROTECTION FENCE
- LD — LD — LIMITS OF DISTURBANCE
- TP/LD — TP/LD — TREE PROTECTION FENCE/ LIMITS OF DISTURBANCE
- WOODED AREA
- DIVERSION DITCH
- CONSTRUCTION ENTRANCE/EXIT

SEE SHEET C0.01 FOR ALL PROJECT, SITE, GRADING, STORM DRAINAGE AND UTILITY NOTES

GRAPHIC SCALE
0 20 40 80
1 inch = 40 ft.

FINAL DRAWING - NOT RELEASED FOR CONSTRUCTION

McADAMS
The John R. McAdams Company, Inc.
2905 Meridian Parkway
Durham, NC 27713

phone 919. 361. 5000
fax 919. 361. 2269
license number: C-0293, C-187

www.mcadamsco.com

CLIENT

ALLIANCE GROUP OF NC, LLC
7208 FALLS OF NEUSE RD, SUITE 101
RALEIGH, NORTH CAROLINA 27615
CONTACT: JACOB ANDERSON
PHONE: 919. 239. 9486

AGNC BROKERAGE | CONSULTING | PLANNING

PEARCE FARM - PHASES 1-3
CONSTRUCTION DRAWINGS - PACKAGE 1

BURLINGTON MILLS ROAD
TOWN OF ROLESVILLE, NORTH CAROLINA

CID-24-08

NORTH CAROLINA PROFESSIONAL ENGINEER SEAL 22630 WILLIAM T. O'DANIEL — NOT RELEASED FOR CONSTRUCTION

REVISIONS

NO.	DATE	
1	02. 03. 2025	REVISED PER TOWN, CITY AND COUNTY COMMENTS

PLAN INFORMATION

PROJECT NO.	AGN23001
FILENAME	AGN23001-EC3
CHECKED BY	.
DRAWN BY	.
SCALE	1"=40'
DATE	12. 02. 2024

SHEET

EROSION CONTROL PLAN
STAGE 3
AREA "A"

C6.301

X:\Projects\AGN\AGN23001\04-Production\Engineering\Construction Drawings\Current Drawing\AGN23001-EC3.dwg, 1/30/2025 9:39:55 AM, Sherrill Williams

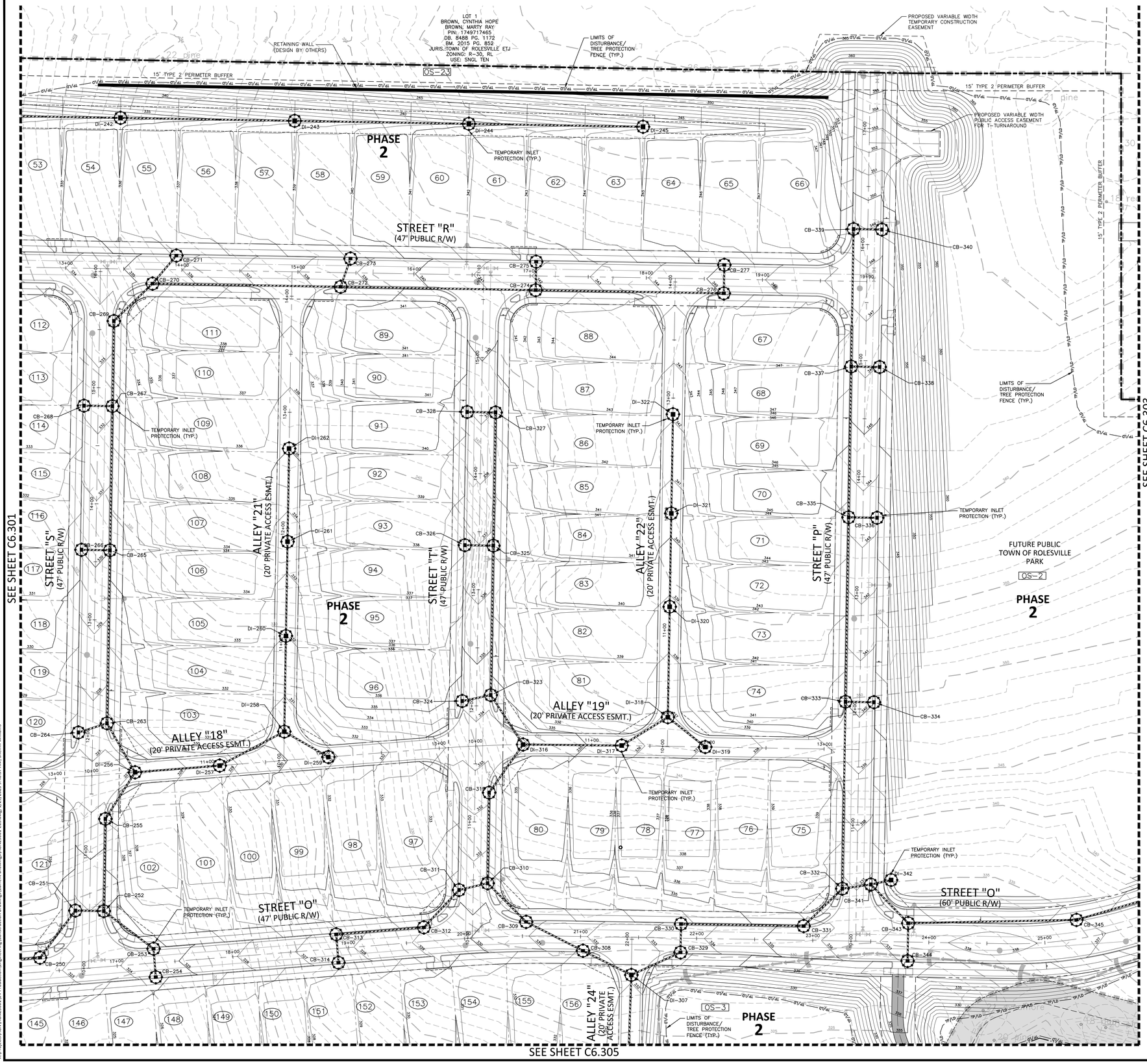

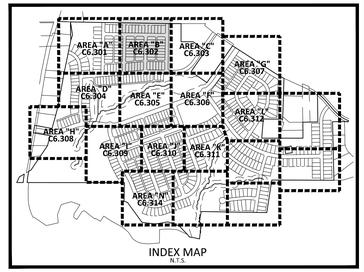

INDEX MAP
N.T.S.

EROSION CONTROL LEGEND

- SILT FENCE OUTLET
- INLET PROTECTION
- INLET PROTECTION FOR EXISTING STRUCTURES
- TEMPORARY SLOPE DRAIN
- FILTER BERM
- CHECK DAM
- SF — SF — SF — SILT FENCE
- TP — TP — TP — TREE PROTECTION FENCE
- LD — LD — LIMITS OF DISTURBANCE
- TP/LD — TP/LD — TREE PROTECTION FENCE/ LIMITS OF DISTURBANCE
- WOODED AREA
- DIVERSION DITCH
- CONSTRUCTION ENTRANCE/EXIT

SEE SHEET C0.01 FOR ALL PROJECT, SITE, GRADING, STORM DRAINAGE AND UTILITY NOTES

GRAPHIC SCALE
0 20 40 80
1 inch = 40 ft.

FINAL DRAWING - NOT RELEASED FOR CONSTRUCTION

McADAMS
The John R. McAdams Company, Inc.
2905 Meridian Parkway
Durham, NC 27713

phone 919. 361. 5000
fax 919. 361. 2269
license number: C-0293, C-187

www.mcadamsco.com

CLIENT

ALLIANCE GROUP OF NC, LLC
7208 FALLS OF NEUSE RD, SUITE 101
RALEIGH, NORTH CAROLINA 27615
CONTACT: JACOB ANDERSON
PHONE: 919. 239. 9486

AGNC BROKERAGE | CONSULTING | PLANNING

PEARCE FARM - PHASES 1-3
CONSTRUCTION DRAWINGS - PACKAGE 1
BURLINGTON MILLS ROAD
TOWN OF ROLESVILLE, NORTH CAROLINA

CID-24-08

NORTH CAROLINA PROFESSIONAL SEAL 22630 ENGINEER WILLIAM T. O'DANIEL — NOT FOR CONSTRUCTION

REVISIONS

NO.	DATE	
1	02. 03. 2025	REVISED PER TOWN, CITY AND COUNTY COMMENTS

PLAN INFORMATION

PROJECT NO.	AGN23001
FILENAME	AGN23001-EC3
CHECKED BY	.
DRAWN BY	.
SCALE	1"=40'
DATE	12. 02. 2024

SHEET

EROSION CONTROL PLAN STAGE 3 AREA "B"

C6.302

X:\Projects\AGN\AGN23001\04-Production\Engineering\Construction Drawings\Current Drawings\AGN23001-EC3.dwg, 1/29/2025 9:40:37 AM, Sherrill Williams

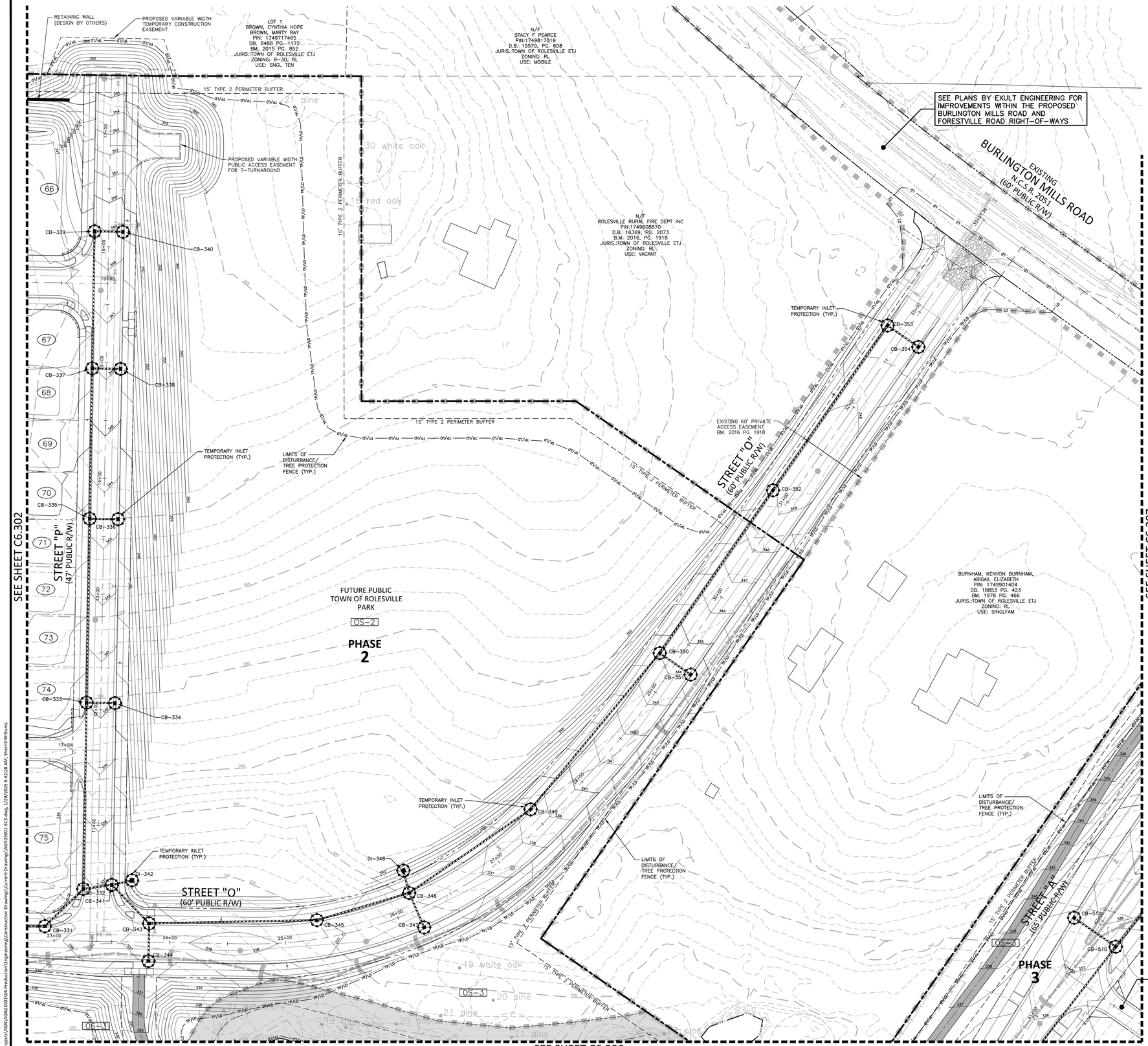

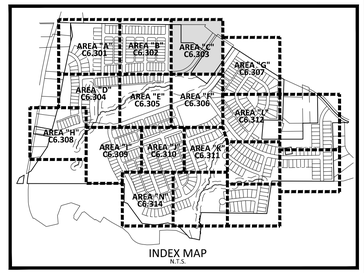

INDEX MAP
N.T.S.

EROSION CONTROL LEGEND

- SILT FENCE OUTLET
- INLET PROTECTION
- INLET PROTECTION FOR EXISTING STRUCTURES
- TEMPORARY SLOPE DRAIN
- FILTER BERM
- CHECK DAM
- SF — SF — SF — SILT FENCE
- TP — TP — TP — TREE PROTECTION FENCE
- LD — LD — LIMITS OF DISTURBANCE
- TP/LD — TP/LD — TREE PROTECTION FENCE/ LIMITS OF DISTURBANCE
- WOODED AREA
- DIVERSION DITCH
- CONSTRUCTION ENTRANCE/EXIT

GRAPHIC SCALE
0 20 40 80
1 inch = 40 ft.

FINAL DRAWING - NOT RELEASED FOR CONSTRUCTION

McADAMS
The John R. McAdams Company, Inc.
2905 Meridian Parkway
Durham, NC 27713

phone 919. 361. 5000
fax 919. 361. 2269
license number: C-0293, C-187

www.mcadamsco.com

CLIENT

ALLIANCE GROUP OF NC, LLC
7208 FALLS OF NEUSE RD, SUITE 101
RALEIGH, NORTH CAROLINA 27615
CONTACT: JACOB ANDERSON
PHONE: 919. 239. 9486

AGNC BROKERAGE | CONSULTING | PLANNING

PEARCE FARM - PHASES 1-3
CONSTRUCTION DRAWINGS - PACKAGE 1
BURLINGTON MILLS ROAD
TOWN OF ROLESVILLE, NORTH CAROLINA

CID-24-08

NORTH CAROLINA PROFESSIONAL ENGINEER SEAL 22630 WILLIAM F. O'DANIEL — NOT FOR CONSTRUCTION

REVISIONS

NO.	DATE	
1	02. 03. 2025	REVISED PER TOWN, CITY AND COUNTY COMMENTS

PLAN INFORMATION

PROJECT NO.	AGN23001
FILENAME	AGN23001-EC3
CHECKED BY	.
DRAWN BY	.
SCALE	1"=40'
DATE	12. 02. 2024

SHEET

EROSION CONTROL PLAN
STAGE 3
AREA "C"

C6.303

X:\Projects\AGN\AGN23001\04-Production\Engineering\Construction Drawings\Current Drawing\AGN23001-EC3.dwg, 1/29/2025 9:42:28 AM, Sherrill Williams

SEE SHEET C6.301

SEE SHEET C6.305

SEE SHEET C6.308

SEE SHEET C6.309

STREET "Q"
(47' PUBLIC R/W)

STREET "O"
(47' PUBLIC R/W)

STREET "N"
(47' PUBLIC R/W)

STREET "A"
(65' PUBLIC R/W)

ALLEY "23"
(20' PRIVATE ACCESS ESMT.)

ALLEY "16"
(20' PRIVATE ACCESS ESMT.)

PHASE 1

PHASE 2

PHASE 3
ACTIVE OPEN SPACE
OS-3

OS-3

OS-5

N/F
RICKY UPCHURCH
PIN:1749606380
D.B. 19101, PG. 210
JURIS.: WAKE COUNTY
ZONING: R-30
USE: FORESTRY

N/F
ANNIE THOMAS
PIN:1749606158
B.M. 2016, PG. 998
JURIS.: WAKE COUNTY
ZONING: R-30
USE: VACANT

N/F
RICKEY UPCHURCH
PIN:1749606020
D.B. 16461, PG. 1373
B.M. 2016, PG. 196
JURIS.: WAKE COUNTY
ZONING: R-30
USE: SINGLE FAMILY

PROPOSED 30' CITY OF RALEIGH PUBLIC SANITARY SEWER EASEMENT (TYP.)

TEMPORARY INLET PROTECTION (TYP.)

EX. WETLANDS (TYP.)

RETAINING WALL (DESIGN BY OTHERS)

50' NEUSE RIPARIAN BUFFER (MEASURED 50' FROM TOP OF BANK, EACH SIDE)

TOP OF BANK (TYP.)

BOND ACCESS

STORMWATER CONTROL MEASURE "A"

VARIABLE WIDTH STORMWATER FACILITY MAINTENANCE/ACCESS EASEMENT (TYP.)

LIMITS OF DISTURBANCE/ TREE PROTECTION FENCE (TYP.)

TEMPORARY SLOPE DRAIN

TEMPORARY INLET PROTECTION

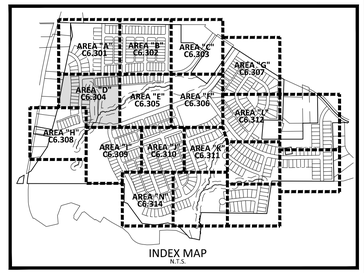

INDEX MAP
N.T.S.

EROSION CONTROL LEGEND

- SILT FENCE OUTLET
- INLET PROTECTION
- INLET PROTECTION FOR EXISTING STRUCTURES
- TEMPORARY SLOPE DRAIN
- FILTER BERM
- CHECK DAM
- SF — SF — SF — SILT FENCE
- TP — TP — TP — TREE PROTECTION FENCE
- LD — LD — LIMITS OF DISTURBANCE
- TP/LD — TP/LD — TREE PROTECTION FENCE/ LIMITS OF DISTURBANCE
- WOODED AREA
- DIVERSION DITCH
- CONSTRUCTION ENTRANCE/EXIT

SEE SHEET C0.01 FOR ALL PROJECT, SITE, GRADING, STORM DRAINAGE AND UTILITY NOTES

GRAPHIC SCALE
0 20 40 80
1 inch = 40 ft.

FINAL DRAWING - NOT RELEASED FOR CONSTRUCTION

McADAMS
The John R. McAdams Company, Inc.
2905 Meridian Parkway
Durham, NC 27713

phone 919. 361. 5000
fax 919. 361. 2269
license number: C-0293, C-187

www.mcadamsco.com

CLIENT

ALLIANCE GROUP OF NC, LLC
7208 FALLS OF NEUSE RD, SUITE 101
RALEIGH, NORTH CAROLINA 27615
CONTACT: JACOB ANDERSON
PHONE: 919. 239. 9486

AGNC
BROKERAGE | CONSULTING | PLANNING

PEARCE FARM - PHASES 1-3
CONSTRUCTION DRAWINGS - PACKAGE 1
BURLINGTON MILLS ROAD
TOWN OF ROLESVILLE, NORTH CAROLINA

CID-24-08

NORTH CAROLINA PROFESSIONAL ENGINEER SEAL 22630 WILLIAM T. CRANEL — NOT FOR CONSTRUCTION

REVISIONS

NO.	DATE	
1	02. 03. 2025	REVISED PER TOWN, CITY AND COUNTY COMMENTS

PLAN INFORMATION

PROJECT NO.	AGN23001
FILENAME	AGN23001-EC3
CHECKED BY	.
DRAWN BY	.
SCALE	1"=40'
DATE	12. 02. 2024

SHEET

EROSION CONTROL PLAN
STAGE 3
AREA "D"

C6.304

X:\Projects\AGN\AGN23001\04-Production\Engineering\Construction Drawings\Current Drawings\AGN23001-EC3.dwg, 1/29/2025 9:44:02 AM, Sherrill Williams

SEE SHEET C6.302

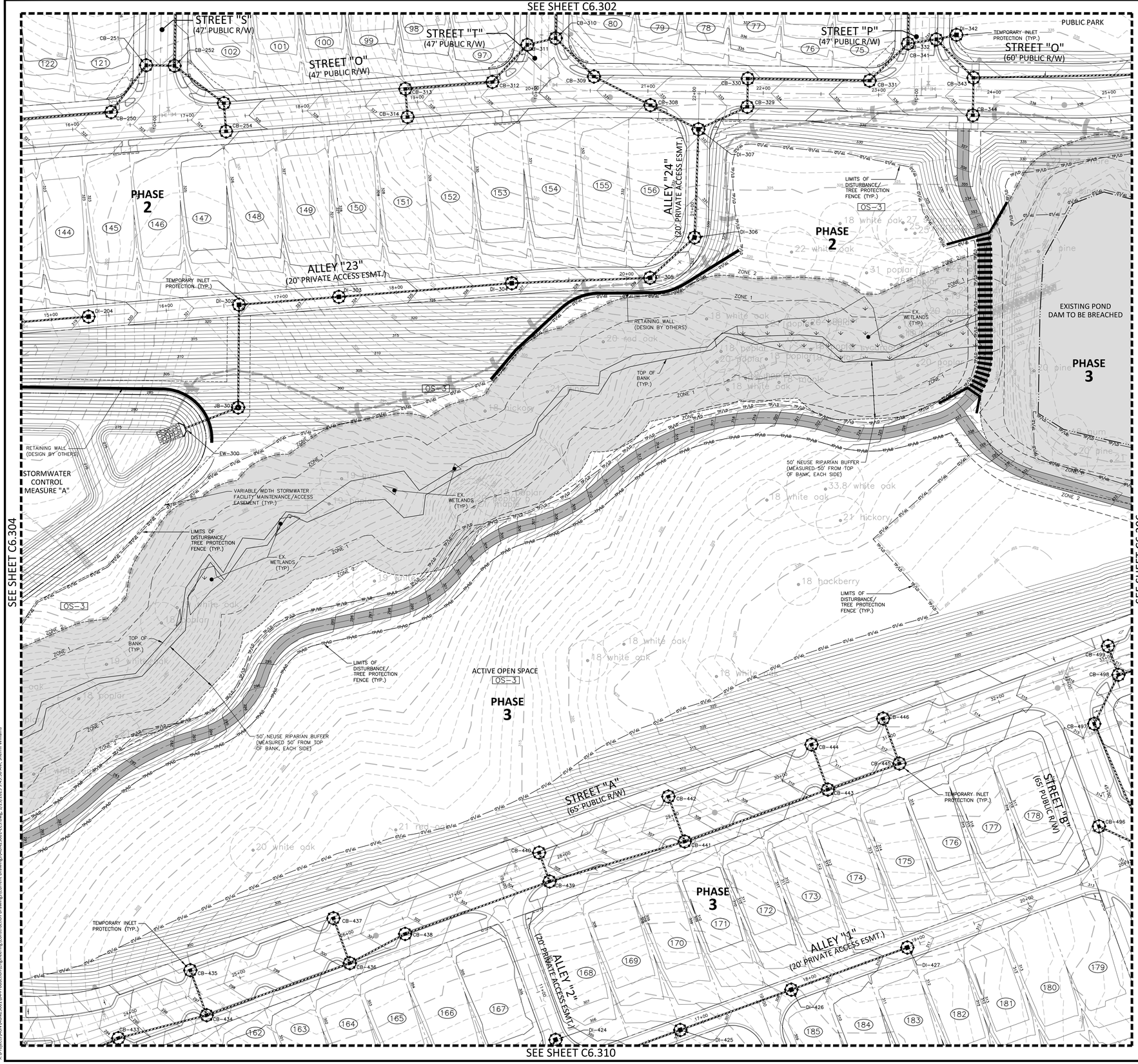

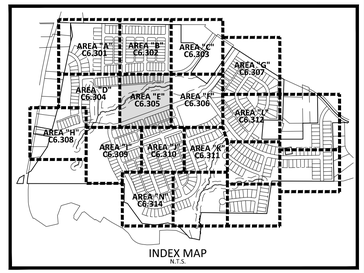

EROSION CONTROL LEGEND

- SILT FENCE OUTLET
- INLET PROTECTION
- INLET PROTECTION FOR EXISTING STRUCTURES
- TEMPORARY SLOPE DRAIN
- FILTER BERM
- CHECK DAM
- SF — SF — SF — SILT FENCE
- TP — TP — TP — TREE PROTECTION FENCE
- LD — LD — LIMITS OF DISTURBANCE
- TP/LD — TP/LD — TREE PROTECTION FENCE/ LIMITS OF DISTURBANCE
- WOODED AREA
- DIVERSION DITCH
- CONSTRUCTION ENTRANCE/EXIT

SEE SHEET C0.01 FOR ALL PROJECT, SITE, GRADING, STORM DRAINAGE AND UTILITY NOTES

GRAPHIC SCALE
0 20 40 80
1 inch = 40 ft.

FINAL DRAWING - NOT RELEASED FOR CONSTRUCTION

McADAMS
The John R. McAdams Company, Inc.
2905 Meridian Parkway
Durham, NC 27713

phone 919. 361. 5000
fax 919. 361. 2269
license number: C-0293, C-187

www.mcadamsco.com

CLIENT

ALLIANCE GROUP OF NC, LLC
7208 FALLS OF NEUSE RD, SUITE 101
RALEIGH, NORTH CAROLINA 27615
CONTACT: JACOB ANDERSON
PHONE: 919. 239. 9486

AGNC BROKERAGE | CONSULTING | PLANNING

PEARCE FARM - PHASES 1-3
CONSTRUCTION DRAWINGS - PACKAGE 1
BURLINGTON MILLS ROAD
TOWN OF ROLESVILLE, NORTH CAROLINA

CID-24-08

NORTH CAROLINA PROFESSIONAL ENGINEER SEAL 22630 JILLIAN T. O'DANIEL — NOT FOR CONSTRUCTION

REVISIONS

NO.	DATE	
1	02. 03. 2025	REVISED PER TOWN, CITY AND COUNTY COMMENTS

PLAN INFORMATION

PROJECT NO.	AGN23001
FILENAME	AGN23001-EC3
CHECKED BY	.
DRAWN BY	.
SCALE	1"=40'
DATE	12. 02. 2024

SHEET

EROSION CONTROL PLAN STAGE 3 AREA "E"

C6.305

X:\Projects\AGN\AGN23001\104-Production\Engineering\Construction Drawings\Current Drawings\AGN23001-EC3.dwg, 1/30/2025 9:45:38 AM, Sherrill Williams

SEE SHEET C6.303

SEE SHEET C6.305

SEE SHEET C6.307

SEE SHEET C6.310

SEE SHEET C6.311

EXISTING POND
DAM TO BE BREACHED

LIMITS OF DISTURBANCE/ TREE PROTECTION FENCE (TYP.)

BURNHAM, KENYON BURNHAM, ABIGAIL ELIZABETH
PIN: 9749901404
DB. 18853 PG. 423
BM. 1976 PG. 466
JURIS.:TOWN OF ROLESVILLE ETJ
ZONING: RL
USE: SINGLFAM

50' NEUSE RIPARIAN BUFFER (MEASURED 50' FROM TOP OF BANK, EACH SIDE)

PHASE 3
ACTIVE OPEN SPACE
OS-3

MAIN AMENITY
OS-1

OS-19

STREET "A" (65' PUBLIC R/W)

STREET "B" (65' PUBLIC R/W)

STREET "C" (65' PUBLIC R/W)

STREET "C" (60' PUBLIC R/W)

STREET "J" (47' PUBLIC R/W)

STREET "K" (65' PUBLIC R/W)

ALLEY "11" (20' PRIVATE ACCESS ESMT.)

ALLEY "12" (20' PRIVATE ACCESS ESMT.)

ALLEY "13" (20' PRIVATE ACCESS ESMT.)

ALLEY "14" (20' PRIVATE ACCESS ESMT.)

ALLEY "15" (20' PRIVATE ACCESS ESMT.)

PHASE 3

PHASE 4

TEMPORARY INLET PROTECTION (TYP.)

PROPOSED 30' CITY OF RALEIGH PUBLIC SANITARY SEWER EASEMENT (TYP.)

CB-473, CB-474, CB-487, CB-488, CB-489, CB-490, CB-491, CB-492, CB-493, CB-494, CB-495, CB-496, CB-497, CB-498, CB-499, CB-500, CB-501, CB-502, CB-503, CB-504, CB-505, CB-506, CB-507, CB-508, CB-509, CB-521, CB-522, CB-523, CB-524, CB-525, CB-526, CB-527, CB-528, CB-531, CB-532, CB-534, CB-535, CB-536

DI-490, DI-491, DI-492, DI-537, DI-539, DI-540, DI-541, DI-542, DI-543, DI-544, DI-545

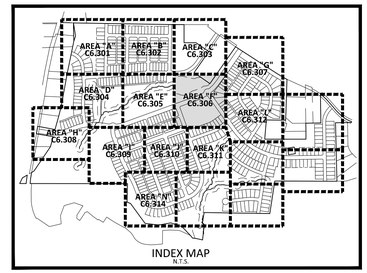

INDEX MAP
N.T.S.

EROSION CONTROL LEGEND

- SILT FENCE OUTLET
- INLET PROTECTION
- INLET PROTECTION FOR EXISTING STRUCTURES
- TEMPORARY SLOPE DRAIN
- FILTER BERM
- CHECK DAM
- SF — SF — SF — SILT FENCE
- TP — TP — TP — TREE PROTECTION FENCE
- LD — LD — LIMITS OF DISTURBANCE
- TP/LD — TP/LD — TREE PROTECTION FENCE/ LIMITS OF DISTURBANCE
- WOODED AREA
- DIVERSION DITCH
- CONSTRUCTION ENTRANCE/EXIT

SEE SHEET C0.01 FOR ALL PROJECT, SITE, GRADING, STORM DRAINAGE AND UTILITY NOTES

GRAPHIC SCALE
0 20 40 80
1 inch = 40 ft.

FINAL DRAWING - NOT RELEASED FOR CONSTRUCTION

McADAMS
The John R. McAdams Company, Inc.
2905 Meridian Parkway
Durham, NC 27713

phone 919. 361. 5000
fax 919. 361. 2269
license number: C-0293, C-187

www.mcadamsco.com

CLIENT

ALLIANCE GROUP OF NC, LLC
7208 FALLS OF NEUSE RD, SUITE 101
RALEIGH, NORTH CAROLINA 27615
CONTACT: JACOB ANDERSON
PHONE: 919. 239. 9486

AGNC BROKERAGE | CONSULTING | PLANNING

PEARCE FARM - PHASES 1-3
CONSTRUCTION DRAWINGS - PACKAGE 1

BURLINGTON MILLS ROAD
TOWN OF ROLESVILLE, NORTH CAROLINA

CID-24-08

NORTH CAROLINA PROFESSIONAL SEAL 22630 ENGINEER WILLIAM T. O'DANIEL — NOT FOR CONSTRUCTION

REVISIONS

NO.	DATE	
1	02. 03. 2025	REVISED PER TOWN, CITY AND COUNTY COMMENTS

PLAN INFORMATION

PROJECT NO.	AGN23001
FILENAME	AGN23001-EC3
CHECKED BY	.
DRAWN BY	.
SCALE	1"=40'
DATE	12. 02. 2024

SHEET

EROSION CONTROL PLAN STAGE 3 AREA "F"

C6.306

X:\Projects\AGN\AGN23001\04-Production\Engineering\Construction Drawings\Current Drawings\AGN23001-EC3.dwg, 1/29/2025 9:46:16 AM, Sherrill Williams

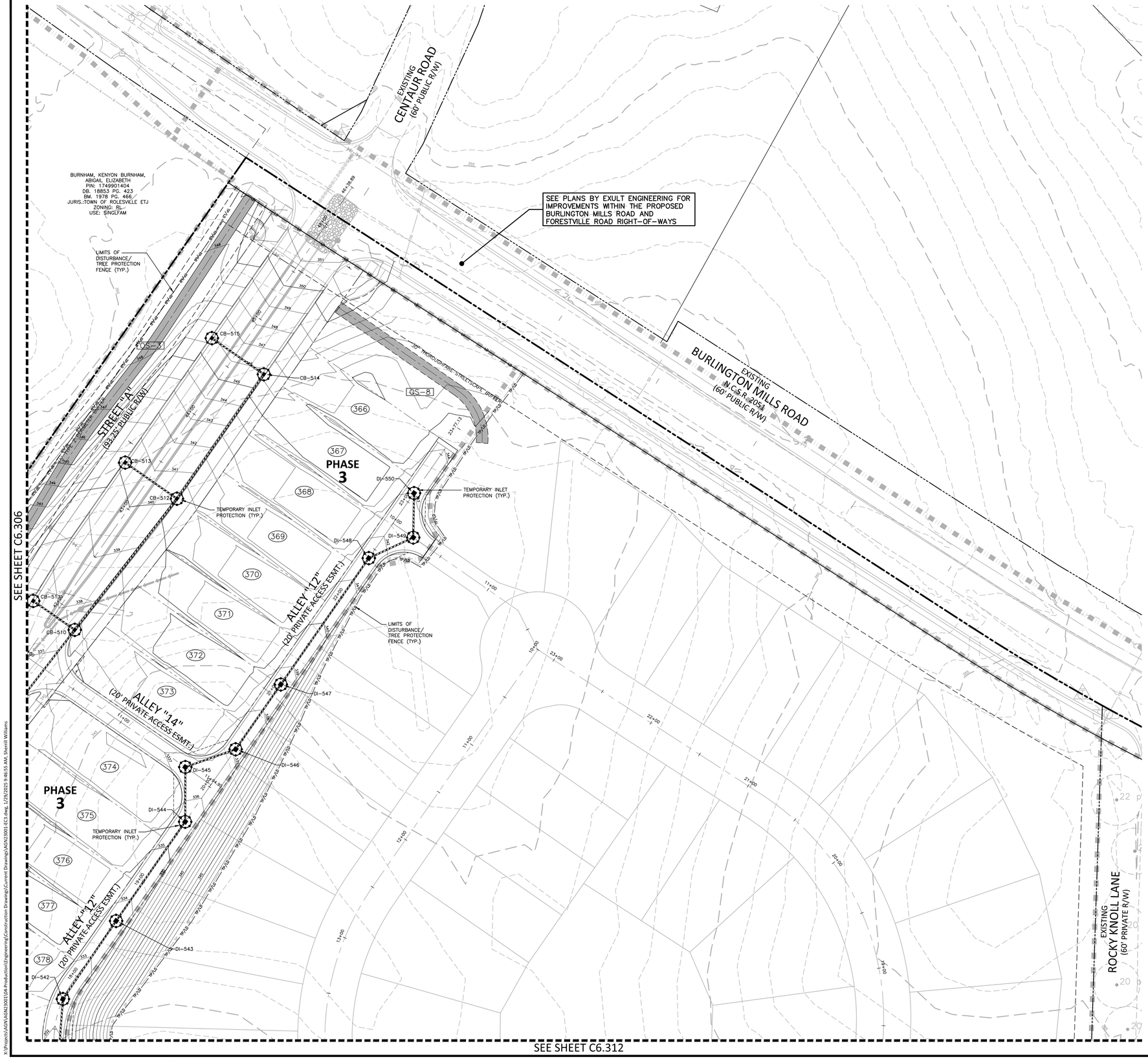

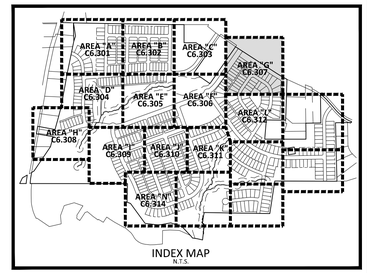

EROSION CONTROL LEGEND

- SILT FENCE OUTLET
- INLET PROTECTION
- INLET PROTECTION FOR EXISTING STRUCTURES
- TEMPORARY SLOPE DRAIN
- FILTER BERM
- CHECK DAM
- SF — SF — SF — SILT FENCE
- TP — TP — TP — TREE PROTECTION FENCE
- LD — LD — LIMITS OF DISTURBANCE
- TP/LD — TP/LD — TREE PROTECTION FENCE/ LIMITS OF DISTURBANCE
- WOODED AREA
- DIVERSION DITCH
- CONSTRUCTION ENTRANCE/EXIT

SEE SHEET C0.01 FOR ALL PROJECT, SITE, GRADING, STORM DRAINAGE AND UTILITY NOTES

GRAPHIC SCALE
0 20 40 80
1 inch = 40 ft.

FINAL DRAWING - NOT RELEASED FOR CONSTRUCTION

McADAMS
The John R. McAdams Company, Inc.
2905 Meridian Parkway
Durham, NC 27713

phone 919. 361. 5000
fax 919. 361. 2269
license number: C-0293, C-187

www.mcadamsco.com

CLIENT

ALLIANCE GROUP OF NC, LLC
7208 FALLS OF NEUSE RD, SUITE 101
RALEIGH, NORTH CAROLINA 27615
CONTACT: JACOB ANDERSON
PHONE: 919. 239. 9486

AGNC BROKERAGE | CONSULTING | PLANNING

PEARCE FARM - PHASES 1-3
CONSTRUCTION DRAWINGS - PACKAGE 1
BURLINGTON MILLS ROAD
TOWN OF ROLESVILLE, NORTH CAROLINA

CID-24-08

NORTH CAROLINA PROFESSIONAL ENGINEER SEAL 22630 WILLIAM T. O'DONNELL — NOT FOR CONSTRUCTION

REVISIONS

NO.	DATE	
1	02. 03. 2025	REVISED PER TOWN, CITY AND COUNTY COMMENTS

PLAN INFORMATION

PROJECT NO.	AGN23001
FILENAME	AGN23001-EC3
CHECKED BY	.
DRAWN BY	.
SCALE	1"=40'
DATE	12. 02. 2024

SHEET

EROSION CONTROL PLAN STAGE 3 AREA "G"

C6.307

X:\Projects\AGN\AGN23001\04-Production\Engineering\Construction Drawings\Current Drawings\AGN23001-EC3.dwg, 1/29/2025 9:46:55 AM, Sherrill Williams

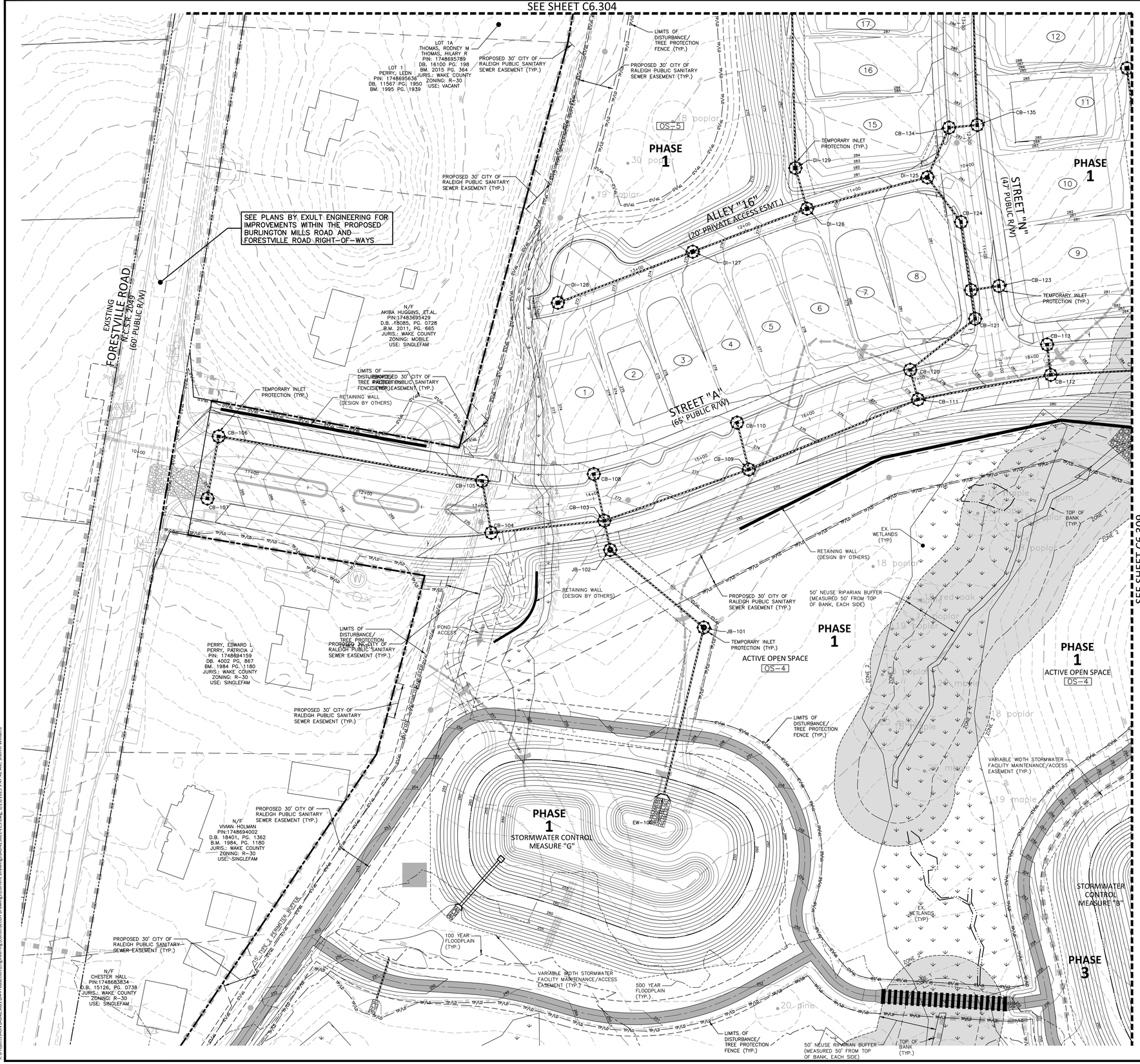

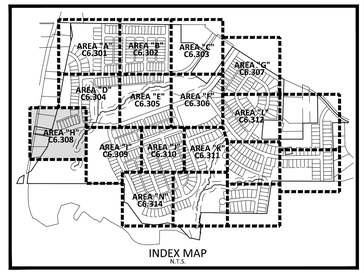

EROSION CONTROL LEGEND

- SILT FENCE OUTLET
- INLET PROTECTION
- INLET PROTECTION FOR EXISTING STRUCTURES
- TEMPORARY SLOPE DRAIN
- FILTER BERM
- CHECK DAM
- SF — SF — SF — SILT FENCE
- TP — TP — TP — TREE PROTECTION FENCE
- LD — LD — LIMITS OF DISTURBANCE
- TP/LD — TP/LD — TREE PROTECTION FENCE/ LIMITS OF DISTURBANCE
- WOODED AREA
- DIVERSION DITCH
- CONSTRUCTION ENTRANCE/EXIT

SEE SHEET C0.01 FOR ALL PROJECT, SITE, GRADING, STORM DRAINAGE AND UTILITY NOTES

GRAPHIC SCALE
0 20 40 80
1 inch = 40 ft.

FINAL DRAWING - NOT RELEASED FOR CONSTRUCTION

McADAMS
The John R. McAdams Company, Inc.
2905 Meridian Parkway
Durham, NC 27713

phone 919. 361. 5000
fax 919. 361. 2269
license number: C-0293, C-187

www.mcadamsco.com

CLIENT

ALLIANCE GROUP OF NC, LLC
7208 FALLS OF NEUSE RD, SUITE 101
RALEIGH, NORTH CAROLINA 27615
CONTACT: JACOB ANDERSON
PHONE: 919. 239. 9486

AGNC BROKERAGE | CONSULTING | PLANNING

PEARCE FARM - PHASES 1-3
CONSTRUCTION DRAWINGS - PACKAGE 1
BURLINGTON MILLS ROAD
TOWN OF ROLESVILLE, NORTH CAROLINA

CID-24-08

NORTH CAROLINA PROFESSIONAL ENGINEER SEAL 22630 WILLIAM T. O'DANIEL NOT FOR CONSTRUCTION

REVISIONS

NO.	DATE	
1	02. 03. 2025	REVISED PER TOWN, CITY AND COUNTY COMMENTS

PLAN INFORMATION

PROJECT NO.	AGN23001
FILENAME	AGN23001-EC3
CHECKED BY	.
DRAWN BY	.
SCALE	1"=40'
DATE	12. 02. 2024

SHEET

EROSION CONTROL PLAN
STAGE 3
AREA "H"

C6.308

X:\Projects\AGN\AGN23001\04-Production\Engineering\Construction Drawings\Current Drawings\AGN23001-EC3.dwg, 1/29/2025 9:47:42 AM, Sherrill Williams

SEE SHEET C6.304

SEE SHEET C6.308

SEE SHEET C6.310

SEE SHEET C6.314

STREET "N"
(47' PUBLIC R/W)

STREET "A"
(65' PUBLIC R/W)

STREET "B"
(60' PUBLIC R/W)

STREET "K"
(65' PUBLIC R/W)

ALLEY "1"
(20' PRIVATE ACCESS ESMT.)

ALLEY "4"
(20' PRIVATE ACCESS ESMT.)

ALLEY "5"
(20' PRIVATE ACCESS ESMT.)

ALLEY "8"
(20' PRIVATE ACCESS ESMT.)

PHASE 1

PHASE 3

PHASE 4

ACTIVE OPEN SPACE
OS-4

OS-16

OS-21

OS-22

TOP OF BANK (TYP.)

RETAINING WALL (DESIGN BY OTHERS)

LIMITS OF DISTURBANCE/ TREE PROTECTION FENCE (TYP.)

50' NEUSE RIPARIAN BUFFER (MEASURED 50' FROM TOP OF BANK, EACH SIDE)

POND ACCESS

PROPOSED 30' CITY OF RALEIGH PUBLIC SANITARY SEWER EASEMENT (TYP.)

VARIABLE WIDTH STORMWATER FACILITY MAINTENANCE/ACCESS EASEMENT (TYP.)

EX. WETLANDS (TYP)

PROPOSED BOARDWALK ACROSS WETLANDS AND STREAM BUFFERS (TYP.)

STORMWATER CONTROL MEASURE "B"

500 YEAR FLOODPLAIN (TYP.)

100 YEAR FLOODPLAIN (TYP.)

TEMPORARY INLET PROTECTION (TYP.)

PROPOSED 30' CITY OF RALEIGH PUBLIC SANITARY SEWER EASEMENT (TYP.)

LIMITS OF DISTURBANCE/ TREE PROTECTION FENCE (TYP.)

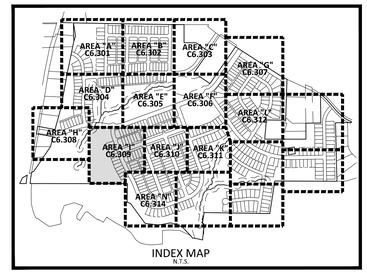

INDEX MAP
N.T.S.

EROSION CONTROL LEGEND

- SILT FENCE OUTLET
- INLET PROTECTION
- INLET PROTECTION FOR EXISTING STRUCTURES
- TEMPORARY SLOPE DRAIN
- FILTER BERM
- CHECK DAM
- SF — SF — SF — SILT FENCE
- TP — TP — TP — TREE PROTECTION FENCE
- LD — LD — LIMITS OF DISTURBANCE
- TP/LD — TP/LD — TREE PROTECTION FENCE/ LIMITS OF DISTURBANCE
- WOODED AREA
- DIVERSION DITCH
- CONSTRUCTION ENTRANCE/EXIT

SEE SHEET C0.01 FOR ALL PROJECT, SITE, GRADING, STORM DRAINAGE AND UTILITY NOTES

GRAPHIC SCALE
0 20 40 80
1 inch = 40 ft.

FINAL DRAWING - NOT RELEASED FOR CONSTRUCTION

McADAMS
The John R. McAdams Company, Inc.
2905 Meridian Parkway
Durham, NC 27713

phone 919. 361. 5000
fax 919. 361. 2269
license number: C-0293, C-187

www.mcadamsco.com

CLIENT

ALLIANCE GROUP OF NC, LLC
7208 FALLS OF NEUSE RD, SUITE 101
RALEIGH, NORTH CAROLINA 27615
CONTACT: JACOB ANDERSON
PHONE: 919. 239. 9486

AGNC BROKERAGE | CONSULTING | PLANNING

PEARCE FARM - PHASES 1-3
CONSTRUCTION DRAWINGS - PACKAGE 1

BURLINGTON MILLS ROAD
TOWN OF ROLESVILLE, NORTH CAROLINA

CID-24-08

NORTH CAROLINA PROFESSIONAL ENGINEER SEAL 22630 WILLIAM T. O'DANIEL — NOT FOR CONSTRUCTION

REVISIONS

NO.	DATE	
1	02. 03. 2025	REVISED PER TOWN, CITY AND COUNTY COMMENTS

PLAN INFORMATION

PROJECT NO.	AGN23001
FILENAME	AGN23001-EC3
CHECKED BY	.
DRAWN BY	.
SCALE	1"=40'
DATE	12. 02. 2024

SHEET

EROSION CONTROL PLAN
STAGE 3
AREA "I"

C6.309

X:\Projects\AGN\AGN23001\04-Production\Engineering\Construction Drawings\Current Drawings\AGN23001-EC3.dwg, 1/29/2025 9:48:21 AM, Sherrill Williams

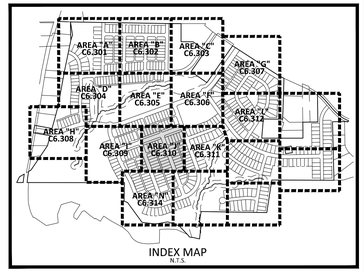

EROSION CONTROL LEGEND

- SILT FENCE OUTLET
- INLET PROTECTION
- INLET PROTECTION FOR EXISTING STRUCTURES
- TEMPORARY SLOPE DRAIN
- FILTER BERM
- CHECK DAM
- SF — SF — SF — SILT FENCE
- TP — TP — TP — TREE PROTECTION FENCE
- LD — LD — LIMITS OF DISTURBANCE
- TP/LD — TP/LD — TREE PROTECTION FENCE/ LIMITS OF DISTURBANCE
- WOODED AREA
- DIVERSION DITCH
- CONSTRUCTION ENTRANCE/EXIT

SEE SHEET C0.01 FOR ALL PROJECT, SITE, GRADING, STORM DRAINAGE AND UTILITY NOTES

GRAPHIC SCALE
0 20 40 80
1 inch = 40 ft.

FINAL DRAWING - NOT RELEASED FOR CONSTRUCTION

McADAMS
The John R. McAdams Company, Inc.
2905 Meridian Parkway
Durham, NC 27713

phone 919. 361. 5000
fax 919. 361. 2269
license number: C-0293, C-187

www.mcadamsco.com

CLIENT

ALLIANCE GROUP OF NC, LLC
7208 FALLS OF NEUSE RD, SUITE 101
RALEIGH, NORTH CAROLINA 27615
CONTACT: JACOB ANDERSON
PHONE: 919. 239. 9486

AGNC BROKERAGE | CONSULTING | PLANNING

PEARCE FARM - PHASES 1-3
CONSTRUCTION DRAWINGS - PACKAGE 1
BURLINGTON MILLS ROAD
TOWN OF ROLESVILLE, NORTH CAROLINA

CID-24-08

NORTH CAROLINA PROFESSIONAL ENGINEER SEAL 22630 WILLIAM T. O'DANIEL

REVISIONS

NO.	DATE	
1	02. 03. 2025	REVISED PER TOWN, CITY AND COUNTY COMMENTS

PLAN INFORMATION

PROJECT NO.	AGN23001
FILENAME	AGN23001-EC3
CHECKED BY	.
DRAWN BY	.
SCALE	1"=40'
DATE	12. 02. 2024

SHEET

EROSION CONTROL PLAN
STAGE 3
AREA "J"

C6.310

X:\Projects\AGN\AGN23001\04-Production\Engineering\Construction Drawings\Current Drawings\AGN23001-EC3.dwg, 1/29/2025 9:49:24 AM, Sherrill Williams

SEE SHEET C6.306

SEE SHEET C6.310

SEE SHEET C6.316

SEE SHEET C6.315

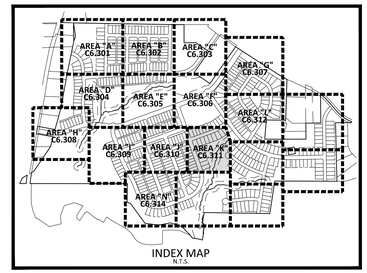

INDEX MAP
N.T.S.

EROSION CONTROL LEGEND

- SILT FENCE OUTLET
- INLET PROTECTION
- INLET PROTECTION FOR EXISTING STRUCTURES
- TEMPORARY SLOPE DRAIN
- FILTER BERM
- CHECK DAM
- SF — SF — SF — SILT FENCE
- TP — TP — TP — TREE PROTECTION FENCE
- LD — LD — LIMITS OF DISTURBANCE
- TP/LD — TP/LD — TREE PROTECTION FENCE/ LIMITS OF DISTURBANCE
- WOODED AREA
- DIVERSION DITCH
- CONSTRUCTION ENTRANCE/EXIT

SEE SHEET C0.01 FOR ALL PROJECT, SITE, GRADING, STORM DRAINAGE AND UTILITY NOTES

GRAPHIC SCALE
0 20 40 80
1 inch = 40 ft.

FINAL DRAWING - NOT RELEASED FOR CONSTRUCTION

McADAMS
The John R. McAdams Company, Inc.
2905 Meridian Parkway
Durham, NC 27713

phone 919. 361. 5000
fax 919. 361. 2269
license number: C-0293, C-187

www.mcadamsco.com

CLIENT

ALLIANCE GROUP OF NC, LLC
7208 FALLS OF NEUSE RD, SUITE 101
RALEIGH, NORTH CAROLINA 27615
CONTACT: JACOB ANDERSON
PHONE: 919. 239. 9486

AGNC BROKERAGE | CONSULTING | PLANNING

PEARCE FARM - PHASES 1-3
CONSTRUCTION DRAWINGS - PACKAGE 1
BURLINGTON MILLS ROAD
TOWN OF ROLESVILLE, NORTH CAROLINA

CID-24-08

NORTH CAROLINA PROFESSIONAL SEAL 22630 ENGINEER WILLIAM T. O'DANIEL — NOT FOR CONSTRUCTION

REVISIONS

NO.	DATE	
1	02. 03. 2025	REVISED PER TOWN, CITY AND COUNTY COMMENTS

PLAN INFORMATION

PROJECT NO.	AGN23001
FILENAME	AGN23001-EC3
CHECKED BY	.
DRAWN BY	.
SCALE	1"=40'
DATE	12. 02. 2024

SHEET

EROSION CONTROL PLAN STAGE 3 AREA "K"

C6.311

X:\Projects\AGN\AGN23001\04-Production\Engineering\Construction Drawings\Current Drawings\AGN23001-EC3.dwg, 1/29/2025 10:15:10 AM, Sherrill Williams

SEE SHEET C6.307

SEE SHEET C6.306

SEE SHEET C6.313

SEE SHEET C6.316

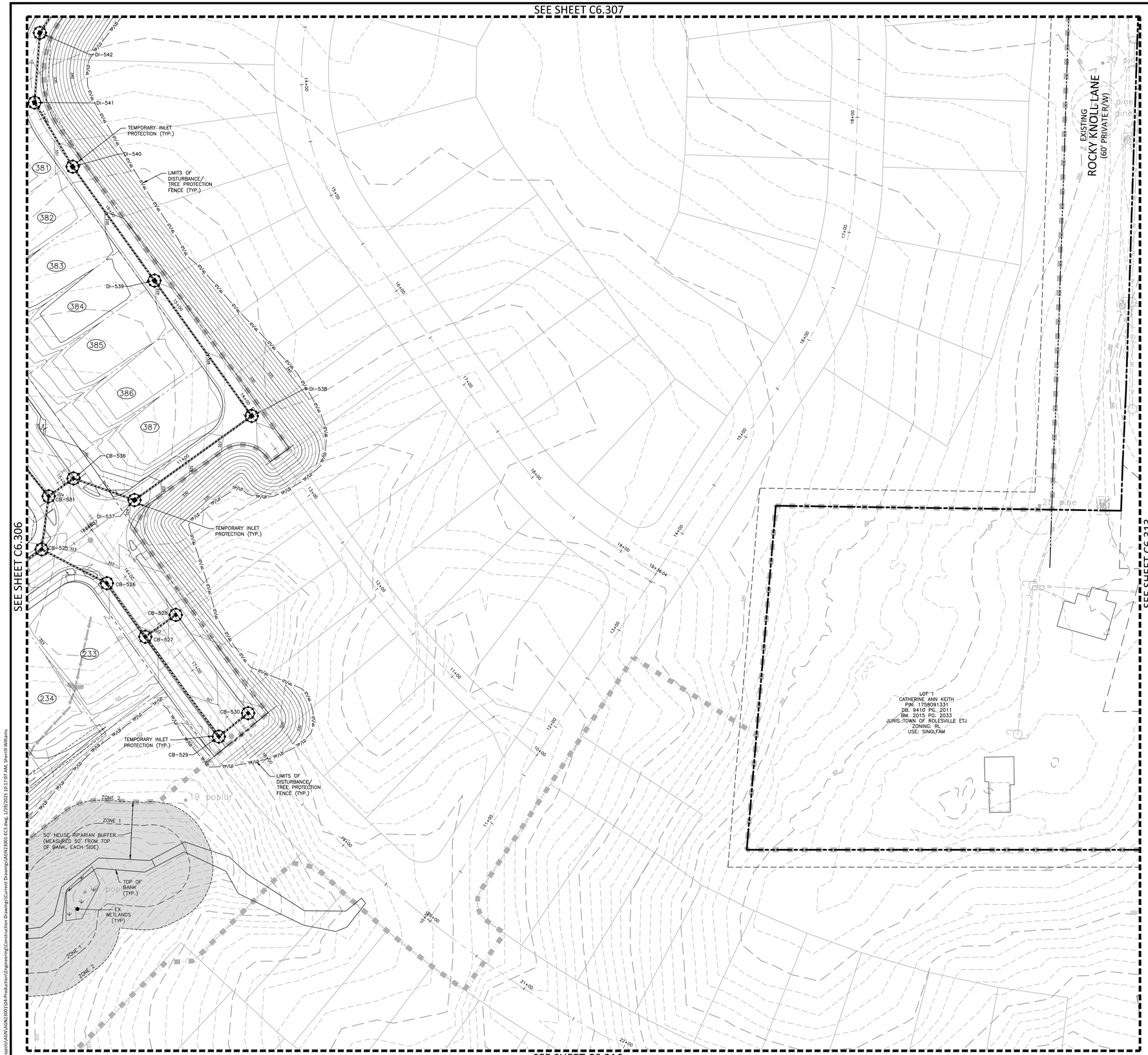

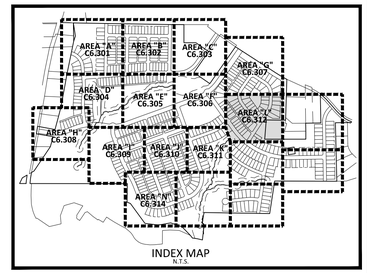

INDEX MAP
N.T.S.

EROSION CONTROL LEGEND

- SILT FENCE OUTLET
- INLET PROTECTION
- INLET PROTECTION FOR EXISTING STRUCTURES
- TEMPORARY SLOPE DRAIN
- FILTER BERM
- CHECK DAM
- SF — SILT FENCE
- TP — TREE PROTECTION FENCE
- LD — LIMITS OF DISTURBANCE
- TP/LD — TREE PROTECTION FENCE/ LIMITS OF DISTURBANCE
- WOODED AREA
- DIVERSION DITCH
- CONSTRUCTION ENTRANCE/EXIT

SEE SHEET C0.01 FOR ALL PROJECT, SITE, GRADING, STORM DRAINAGE AND UTILITY NOTES

GRAPHIC SCALE
0 20 40 80
1 inch = 40 ft.

FINAL DRAWING - NOT RELEASED FOR CONSTRUCTION

McADAMS
The John R. McAdams Company, Inc.
2905 Meridian Parkway
Durham, NC 27713

phone 919. 361. 5000
fax 919. 361. 2269
license number: C-0293, C-187

www.mcadamsco.com

CLIENT

ALLIANCE GROUP OF NC, LLC
7208 FALLS OF NEUSE RD, SUITE 101
RALEIGH, NORTH CAROLINA 27615
CONTACT: JACOB ANDERSON
PHONE: 919. 239. 9486

AGNC BROKERAGE | CONSULTING | PLANNING

PEARCE FARM - PHASES 1-3
CONSTRUCTION DRAWINGS - PACKAGE 1

BURLINGTON MILLS ROAD
TOWN OF ROLESVILLE, NORTH CAROLINA

CID-24-08

NORTH CAROLINA PROFESSIONAL SEAL 22630 ENGINEER WILLIAM T. O'DANIEL — NOT FOR CONSTRUCTION

REVISIONS

NO.	DATE	
1	02. 03. 2025	REVISED PER TOWN, CITY AND COUNTY COMMENTS

PLAN INFORMATION

PROJECT NO.	AGN23001
FILENAME	AGN23001-EC3
CHECKED BY	.
DRAWN BY	.
SCALE	1"=40'
DATE	12. 02. 2024

SHEET

EROSION CONTROL PLAN
STAGE 3
AREA "L"

C6.312

X:\Projects\AGN\AGN23001\04-Production\Engineering\Construction Drawings\Current Drawings\AGN23001-EC3.dwg, 1/29/2025 10:17:07 AM, Sherrill Williams

SEE SHEET C6.310

SEE SHEET C6.309

SEE SHEET C6.315

PHASE 3

LIMITS OF DISTURBANCE/ TREE PROTECTION FENCE (TYP.)

TEMPORARY INLET PROTECTION (TYP.)

PROPOSED 30' CITY OF RALEIGH PUBLIC SANITARY SEWER EASEMENT (TYP.)

CB-407

CB-408

500 YEAR FLOODPLAIN (TYP.)

100 YEAR FLOODPLAIN (TYP.)

EX. WETLANDS (TYP)

DRAYTON RESERVE PROPERTY OWNERS ASSOCIATION INC
PIN: 1748782153
DB. 15809 PG. 2499
BM. 2009 PG. 766
JURIS.:TOWN OF ROLESVILLE
ZONING: RM-CZ
USE: HOA

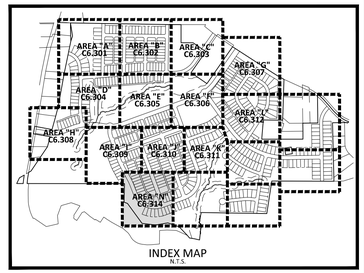

INDEX MAP
N.T.S.

EROSION CONTROL LEGEND

- SILT FENCE OUTLET
- INLET PROTECTION
- INLET PROTECTION FOR EXISTING STRUCTURES
- TEMPORARY SLOPE DRAIN
- FILTER BERM
- CHECK DAM
- SF — SF — SF — SILT FENCE
- TP — TP — TP — TREE PROTECTION FENCE
- LD — LD — LIMITS OF DISTURBANCE
- TP/LD — TP/LD — TREE PROTECTION FENCE/ LIMITS OF DISTURBANCE
- WOODED AREA
- DIVERSION DITCH
- CONSTRUCTION ENTRANCE/EXIT

SEE SHEET C0.01 FOR ALL PROJECT, SITE, GRADING, STORM DRAINAGE AND UTILITY NOTES

GRAPHIC SCALE
0 20 40 80
1 inch = 40 ft.

FINAL DRAWING - NOT RELEASED FOR CONSTRUCTION

McADAMS
The John R. McAdams Company, Inc.
2905 Meridian Parkway
Durham, NC 27713

phone 919. 361. 5000
fax 919. 361. 2269
license number: C-0293, C-187

www.mcadamsco.com

CLIENT

ALLIANCE GROUP OF NC, LLC
7208 FALLS OF NEUSE RD, SUITE 101
RALEIGH, NORTH CAROLINA 27615
CONTACT: JACOB ANDERSON
PHONE: 919. 239. 9486

AGNC BROKERAGE | CONSULTING | PLANNING

PEARCE FARM - PHASES 1-3
CONSTRUCTION DRAWINGS - PACKAGE 1

BURLINGTON MILLS ROAD
TOWN OF ROLESVILLE, NORTH CAROLINA

CID-24-08

NORTH CAROLINA PROFESSIONAL ENGINEER SEAL 22630 WILLIAM F. O'DANIEL — NOT FOR CONSTRUCTION

REVISIONS

NO.	DATE	
1	02. 03. 2025	REVISED PER TOWN, CITY AND COUNTY COMMENTS

PLAN INFORMATION

PROJECT NO.	AGN23001
FILENAME	AGN23001-EC3
CHECKED BY	.
DRAWN BY	.
SCALE	1"=40'
DATE	12. 02. 2024

SHEET

EROSION CONTROL PLAN
STAGE 3
AREA "N"

C6.314

X:\Projects\AGN\AGN23001\04-Production\Engineering\Construction Drawings\Current Drawings\AGN23001-EC3.dwg, 1/29/2025 10:18:05 AM, Sherrill Williams

GROUND STABILIZATION AND MATERIALS HANDLING PRACTICES FOR COMPLIANCE WITH THE NCG01 CONSTRUCTION GENERAL PERMIT

Implementing the details and specifications on this plan sheet will result in the construction activity being considered compliant with the Ground Stabilization and Materials Handling sections of the NCG01 Construction General Permit (Sections E and F, respectively). The permittee shall comply with the Erosion and Sediment Control plan approved by the delegated authority having jurisdiction. All details and specifications shown on this sheet may not apply depending on site conditions and the delegated authority having jurisdiction.

SECTION E: GROUND STABILIZATION

Required Ground Stabilization Timeframes		
Site Area Description	**Stabilize within this many calendar days after ceasing land disturbance**	**Timeframe variations**
(a) Perimeter dikes, swales, ditches, and perimeter slopes	7	None
(b) High Quality Water (HQW) Zones	7	None
(c) Slopes steeper than 3:1	7	If slopes are 10' or less in length and are not steeper than 2:1, 14 days are allowed
(d) Slopes 3:1 to 4:1	14	-7 days for slopes greater than 50' in length and with slopes steeper than 4:1 -7 days for perimeter dikes, swales, ditches, perimeter slopes and HQW Zones -10 days for Falls Lake Watershed
(e) Areas with slopes flatter than 4:1	14	-7 days for perimeter dikes, swales, ditches, perimeter slopes and HQW Zones -10 days for Falls Lake Watershed unless there is zero slope

Note: After the permanent cessation of construction activities, any areas with temporary ground stabilization shall be converted to permanent ground stabilization as soon as practicable but in no case longer than 90 calendar days after the last land disturbing activity. Temporary ground stabilization shall be maintained in a manner to render the surface stable against accelerated erosion until permanent ground stabilization is achieved.

GROUND STABILIZATION SPECIFICATION

Stabilize the ground sufficiently so that rain will not dislodge the soil. Use one of the techniques in the table below:

Temporary Stabilization	Permanent Stabilization
• Temporary grass seed covered with straw or other mulches and tackifiers • Hydroseeding • Rolled erosion control products with or without temporary grass seed • Appropriately applied straw or other mulch • Plastic sheeting	• Permanent grass seed covered with straw or other mulches and tackifiers • Geotextile fabrics such as permanent soil reinforcement matting • Hydroseeding • Shrubs or other permanent plantings covered with mulch • Uniform and evenly distributed ground cover sufficient to restrain erosion • Structural methods such as concrete, asphalt or retaining walls • Rolled erosion control products with grass seed

POLYACRYLAMIDES (PAMS) AND FLOCCULANTS

1. Select flocculants that are appropriate for the soils being exposed during construction, selecting from the *NC DWR List of Approved PAMS/Flocculants*.
2. Apply flocculants at or before the inlets to Erosion and Sediment Control Measures.
3. Apply flocculants at the concentrations specified in the *NC DWR List of Approved PAMS/Flocculants* and in accordance with the manufacturer's instructions.
4. Provide ponding area for containment of treated Stormwater before discharging offsite.
5. Store flocculants in leak-proof containers that are kept under storm-resistant cover or surrounded by secondary containment structures.

EQUIPMENT AND VEHICLE MAINTENANCE

1. Maintain vehicles and equipment to prevent discharge of fluids.
2. Provide drip pans under any stored equipment.
3. Identify leaks and repair as soon as feasible, or remove leaking equipment from the project.
4. Collect all spent fluids, store in separate containers and properly dispose as hazardous waste (recycle when possible).
5. Remove leaking vehicles and construction equipment from service until the problem has been corrected.
6. Bring used fuels, lubricants, coolants, hydraulic fluids and other petroleum products to a recycling or disposal center that handles these materials.

LITTER, BUILDING MATERIAL AND LAND CLEARING WASTE

1. Never bury or burn waste. Place litter and debris in approved waste containers.
2. Provide a sufficient number and size of waste containers (e.g dumpster, trash receptacle) on site to contain construction and domestic wastes.
3. Locate waste containers at least 50 feet away from storm drain inlets and surface waters unless no other alternatives are reasonably available.
4. Locate waste containers on areas that do not receive substantial amounts of runoff from upland areas and does not drain directly to a storm drain, stream or wetland.
5. Cover waste containers at the end of each workday and before storm events or provide secondary containment. Repair or replace damaged waste containers.
6. Anchor all lightweight items in waste containers during times of high winds.
7. Empty waste containers as needed to prevent overflow. Clean up immediately if containers overflow.
8. Dispose waste off-site at an approved disposal facility.
9. On business days, clean up and dispose of waste in designated waste containers.

PAINT AND OTHER LIQUID WASTE

1. Do not dump paint and other liquid waste into storm drains, streams or wetlands.
2. Locate paint washouts at least 50 feet away from storm drain inlets and surface waters unless no other alternatives are reasonably available.
3. Contain liquid wastes in a controlled area.
4. Containment must be labeled, sized and placed appropriately for the needs of site.
5. Prevent the discharge of soaps, solvents, detergents and other liquid wastes from construction sites.

PORTABLE TOILETS

1. Install portable toilets on level ground, at least 50 feet away from storm drains, streams or wetlands unless there is no alternative reasonably available. If 50 foot offset is not attainable, provide relocation of portable toilet behind silt fence or place on a gravel pad and surround with sand bags.
2. Provide staking or anchoring of portable toilets during periods of high winds or in high foot traffic areas.
3. Monitor portable toilets for leaking and properly dispose of any leaked material. Utilize a licensed sanitary waste hauler to remove leaking portable toilets and replace with properly operating unit.

EARTHEN STOCKPILE MANAGEMENT

1. Show stockpile locations on plans. Locate earthen-material stockpile areas at least 50 feet away from storm drain inlets, sediment basins, perimeter sediment controls and surface waters unless it can be shown no other alternatives are reasonably available.
2. Protect stockpile with silt fence installed along toe of slope with a minimum offset of five feet from the toe of stockpile.
3. Provide stable stone access point when feasible.
4. Stabilize stockpile within the timeframes provided on this sheet and in accordance with the approved plan and any additional requirements. Soil stabilization is defined as vegetative, physical or chemical coverage techniques that will restrain accelerated erosion on disturbed soils for temporary or permanent control needs.

CONCRETE WASHOUTS

1. Do not discharge concrete or cement slurry from the site.
2. Dispose of, or recycle settled, hardened concrete residue in accordance with local and state solid waste regulations and at an approved facility.
3. Manage washout from mortar mixers in accordance with the above item and in addition place the mixer and associated materials on impervious barrier and within lot perimeter silt fence.
4. Install temporary concrete washouts per local requirements, where applicable. If an alternate method or product is to be used, contact your approval authority for review and approval. If local standard details are not available, use one of the two types of temporary concrete washouts provided on this detail.
5. Do not use concrete washouts for dewatering or storing defective curb or sidewalk sections. Stormwater accumulated within the washout may not be pumped into or discharged to the storm drain system or receiving surface waters. Liquid waste must be pumped out and removed from project.
6. Locate washouts at least 50 feet from storm drain inlets and surface waters unless it can be shown that no other alternatives are reasonably available. At a minimum, install protection of storm drain inlet(s) closest to the washout which could receive spills or overflow.
7. Locate washouts in an easily accessible area, on level ground and install a stone entrance pad in front of the washout. Additional controls may be required by the approving authority.
8. Install at least one sign directing concrete trucks to the washout within the project limits. Post signage on the washout itself to identify this location.
9. Remove leavings from the washout when at approximately 75% capacity to limit overflow events. Replace the tarp, sand bags or other temporary structural components when no longer functional. When utilizing alternative or proprietary products, follow manufacturer's instructions.
10. At the completion of the concrete work, remove remaining leavings and dispose of in an approved disposal facility. Fill pit, if applicable, and stabilize any disturbance caused by removal of washout.

HERBICIDES, PESTICIDES AND RODENTICIDES

1. Store and apply herbicides, pesticides and rodenticides in accordance with label restrictions.
2. Store herbicides, pesticides and rodenticides in their original containers with the label, which lists directions for use, ingredients and first aid steps in case of accidental poisoning.
3. Do not store herbicides, pesticides and rodenticides in areas where flooding is possible or where they may spill or leak into wells, stormwater drains, ground water or surface water. If a spill occurs, clean area immediately.
4. Do not stockpile these materials onsite.

HAZARDOUS AND TOXIC WASTE

1. Create designated hazardous waste collection areas on-site.
2. Place hazardous waste containers under cover or in secondary containment.
3. Do not store hazardous chemicals, drums or bagged materials directly on the ground.

NCG01 GROUND STABILIZATION AND MATERIALS HANDLING | EFFECTIVE: 04/01/19

PART III
SELF-INSPECTION, RECORDKEEPING AND REPORTING

SECTION A: SELF-INSPECTION

Self-inspections are required during normal business hours in accordance with the table below. When adverse weather or site conditions would cause the safety of the inspection personnel to be in jeopardy, the inspection may be delayed until the next business day on which it is safe to perform the inspection. In addition, when a storm event of equal to or greater than 1.0 inch occurs outside of normal business hours, the self-inspection shall be performed upon the commencement of the next business day. Any time when inspections were delayed shall be noted in the Inspection Record.

Inspect	Frequency (during normal business hours)	Inspection records must include:
(1) Rain gauge maintained in good working order	Daily	Daily rainfall amounts. If no daily rain gauge observations are made during weekend or holiday periods, and no individual day rainfall information is available, record the cumulative rain measurement for these unattended days (and this will determine if a site inspection is needed). Days on which no rainfall occurred shall be recorded as "zero." The permittee may use another rain-monitoring device approved by the Division.
(2) E&SC Measures	At least once per 7 calendar days and within 24 hours of a rain event ≥ 1.0 inch in 24 hours	1. Identification of the measures inspected, 2. Date and time of the inspection, 3. Name of the person performing the inspection, 4. Indication of whether the measures were operating properly, 5. Description of maintenance needs for the measure, 6. Description, evidence, and date of corrective actions taken.
(3) Stormwater discharge outfalls (SDOs)	At least once per 7 calendar days and within 24 hours of a rain event ≥ 1.0 inch in 24 hours	1. Identification of the discharge outfalls inspected, 2. Date and time of the inspection, 3. Name of the person performing the inspection, 4. Evidence of indicators of stormwater pollution such as oil sheen, floating or suspended solids or discoloration, 5. Indication of visible sediment leaving the site, 6. Description, evidence, and date of corrective actions taken.
(4) Perimeter of site	At least once per 7 calendar days and within 24 hours of a rain event ≥ 1.0 inch in 24 hours	If visible sedimentation is found outside site limits, then a record of the following shall be made: 1. Actions taken to clean up or stabilize the sediment that has left the site limits, 2. Description, evidence, and date of corrective actions taken, and 3. An explanation as to the actions taken to control future releases.
(5) Streams or wetlands onsite or offsite (where accessible)	At least once per 7 calendar days and within 24 hours of a rain event ≥ 1.0 inch in 24 hours	If the stream or wetland has increased visible sedimentation or a stream has visible increased turbidity from the construction activity, then a record of the following shall be made: 1. Description, evidence and date of corrective actions taken, and 2. Records of the required reports to the appropriate Division Regional Office per Part III, Section C, Item (2)(a) of this permit.
(6) Ground stabilization measures	After each phase of grading	1. The phase of grading (installation of perimeter E&SC measures, clearing and grubbing, installation of storm drainage facilities, completion of all land-disturbing activity, construction or redevelopment, permanent ground cover). 2. Documentation that the required ground stabilization measures have been provided within the required timeframe or an assurance that they will be provided as soon as possible.

NOTE: The rain inspection resets the required 7 calendar day inspection requirement.

PART III
SELF-INSPECTION, RECORDKEEPING AND REPORTING

SECTION B: RECORDKEEPING

1. E&SC Plan Documentation

The approved E&SC plan as well as any approved deviation shall be kept on the site. The approved E&SC plan must be kept up-to-date throughout the coverage under this permit. The following items pertaining to the E&SC plan shall be kept on site and available for inspection at all times during normal business hours.

Item to Document	Documentation Requirements
(a) Each E&SC measure has been installed and does not significantly deviate from the locations, dimensions and relative elevations shown on the approved E&SC plan.	Initial and date each E&SC measure on a copy of the approved E&SC plan or complete, date and sign an inspection report that lists each E&SC measure shown on the approved E&SC plan. This documentation is required upon the initial installation of the E&SC measures or if the E&SC measures are modified after initial installation.
(b) A phase of grading has been completed.	Initial and date a copy of the approved E&SC plan or complete, date and sign an inspection report to indicate completion of the construction phase.
(c) Ground cover is located and installed in accordance with the approved E&SC plan.	Initial and date a copy of the approved E&SC plan or complete, date and sign an inspection report to indicate compliance with approved ground cover specifications.
(d) The maintenance and repair requirements for all E&SC measures have been performed.	Complete, date and sign an inspection report.
(e) Corrective actions have been taken to E&SC measures.	Initial and date a copy of the approved E&SC plan or complete, date and sign an inspection report to indicate the completion of the corrective action.

2. Additional Documentation to be Kept on Site

In addition to the E&SC plan documents above, the following items shall be kept on the site and available for inspectors at all times during normal business hours, unless the Division provides a site-specific exemption based on unique site conditions that make this requirement not practical:

(a) This General Permit as well as the Certificate of Coverage, after it is received.

(b) Records of inspections made during the previous twelve months. The permittee shall record the required observations on the Inspection Record Form provided by the Division or a similar inspection form that includes all the required elements. Use of electronically-available records in lieu of the required paper copies will be allowed if shown to provide equal access and utility as the hard-copy records.

3. Documentation to be Retained for Three Years

All data used to complete the e-NOI and all inspection records shall be maintained for a period of three years after project completion and made available upon request. [40 CFR 122.41]

PART III
SELF-INSPECTION, RECORDKEEPING AND REPORTING

SECTION C: REPORTING

1. Occurrences that Must be Reported

Permittees shall report the following occurrences:

(a) Visible sediment deposition in a stream or wetland.

(b) Oil spills if:
- They are 25 gallons or more,
- They are less than 25 gallons but cannot be cleaned up within 24 hours,
- They cause sheen on surface waters (regardless of volume), or
- They are within 100 feet of surface waters (regardless of volume).

(c) Releases of hazardous substances in excess of reportable quantities under Section 311 of the Clean Water Act (Ref: 40 CFR 110.3 and 40 CFR 117.3) or Section 102 of CERCLA (Ref: 40 CFR 302.4) or G.S. 143-215.85.

(d) Anticipated bypasses and unanticipated bypasses.

(e) Noncompliance with the conditions of this permit that may endanger health or the environment.

2. Reporting Timeframes and Other Requirements

After a permittee becomes aware of an occurrence that must be reported, he shall contact the appropriate Division regional office within the timeframes and in accordance with the other requirements listed below. Occurrences outside normal business hours may also be reported to the Department's Environmental Emergency Center personnel at (800) 858-0368.

Occurrence	Reporting Timeframes (After Discovery) and Other Requirements
(a) Visible sediment deposition in a stream or wetland	• ***Within 24 hours***, an oral or electronic notification. • ***Within 7 calendar days***, a report that contains a description of the sediment and actions taken to address the cause of the deposition. Division staff may waive the requirement for a written report on a case-by-case basis. • If the stream is named on the NC 303(d) list as impaired for sediment-related causes, the permittee may be required to perform additional monitoring. Inspections or apply more stringent practices if staff determine that additional requirements are needed to assure compliance with the federal or state impaired-waters conditions.
(b) Oil spills and release of hazardous substances per Item 1(b)-(c) above (c) Anticipated bypasses [40 CFR 122.41(m)(3)]	• ***Within 24 hours***, an oral or electronic notification. The notification shall include information about the date, time, nature, volume and location of the spill or release. • ***A report at least ten days before the date of the bypass, if possible*** The report shall include an evaluation of the anticipated quality and effect of the bypass.
(d) Unanticipated bypasses [40 CFR 122.41(m)(3)]	• ***Within 24 hours***, an oral or electronic notification. • ***Within 7 calendar days***, a report that includes an evaluation of the quality and effect of the bypass.
(e) Noncompliance with the conditions of this permit that may endanger health or the environment[40 CFR 122.41(l)(7)]	• ***Within 24 hours***, an oral or electronic notification. • ***Within 7 calendar days***, a report that contains a description of the noncompliance, and its causes; the period of noncompliance, including exact dates and times, and if the noncompliance has not been corrected, the anticipated time noncompliance is expected to continue; and steps taken or planned to reduce, eliminate, and prevent reoccurrence of the noncompliance. [40 CFR 122.41(l)(6). • Division staff may waive the requirement for a written report on a case-by-case basis.

PART II, SECTION G, ITEM (4)
DRAW DOWN OF SEDIMENT BASINS FOR MAINTENANCE OR CLOSE OUT

Sediment basins and traps that receive runoff from drainage areas of one acre or more shall use outlet structures that withdraw water from the surface when these devices need to be drawn down for maintenance or close out unless this is infeasible. The circumstances in which it is not feasible to withdraw water from the surface shall be rare (for example, times with extended cold weather). Non-surface withdrawals from sediment basins shall be allowed only when all of the following criteria have been met:

(a) The E&SC plan authority has been provided with documentation of the non-surface withdrawal and the specific time periods or conditions in which it will occur. The non-surface withdrawal shall not commence until the E&SC plan authority has approved these items,
(b) The non-surface withdrawal has been reported as an anticipated bypass in accordance with Part III, Section C, Item (2)(c) and (d) of this permit,
(c) Dewatering discharges are treated with controls to minimize discharges of pollutants from stormwater that is removed from the sediment basin. Examples of appropriate controls include properly sited, designed and maintained dewatering tanks, weir tanks, and filtration systems,
(d) Vegetated, upland areas of the sites or a properly designed stone pad is used to the extent feasible at the outlet of the dewatering treatment devices described in Item (c) above,
(e) Velocity dissipation devices such as check dams, sediment traps, and riprap are provided at the discharge points of all dewatering devices, and
(f) Sediment removed from the dewatering treatment devices described in Item (c) above is disposed of in a manner that does not cause deposition of sediment into waters of the United States.

NCG01 SELF-INSPECTION, RECORDKEEPING AND REPORTING | EFFECTIVE: 04/01/19

X:\Projects\AGN\AGN23001\04-Production\Engineering\Construction Drawing\Current Drawing\AGN23001-EC4.dwg, 1/28/2025 1:01:21 PM, Sherrill Williams

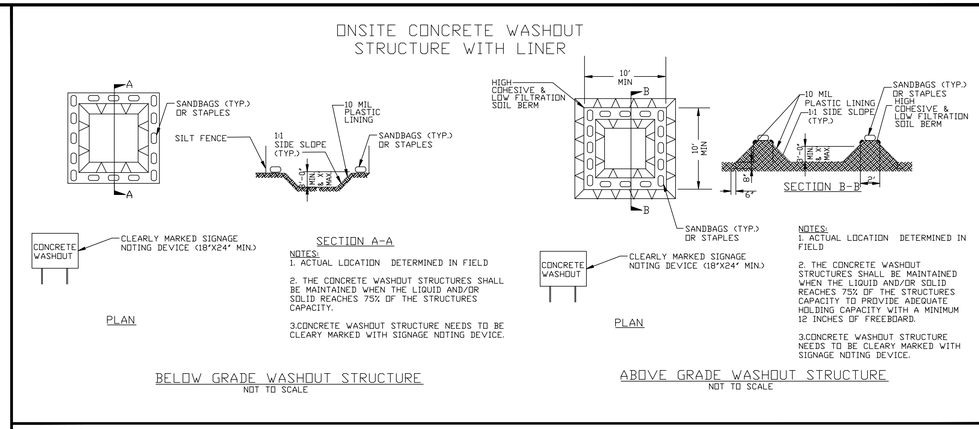

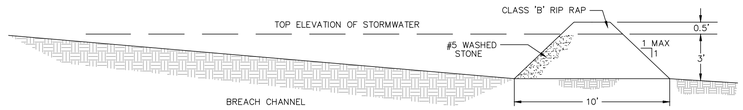

FILTER BERM
NTS

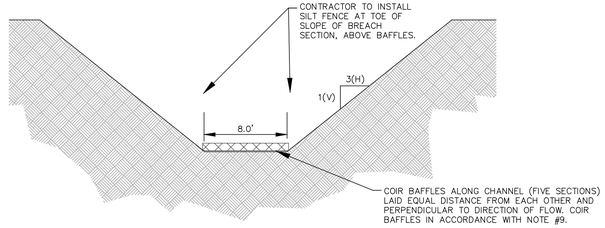

DAM EMBANKMENT BREACH SECTION
N.T.S.

NOTES:
1. STOCKPILE HEIGHT TO NOT EXCEED 6'
2. SEED/MULCH STOCKPILE IN ACCORDANCE WITH E&SC PLAN.

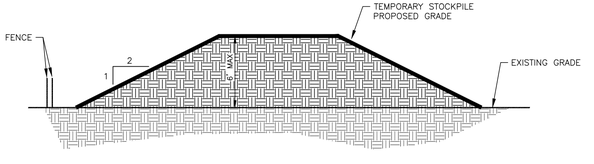

TYPICAL STOCKPILE DETAIL (NTS)

FINAL DRAWING - NOT RELEASED FOR CONSTRUCTION

McADAMS
The John R. McAdams Company, Inc.
2905 Meridian Parkway
Durham, NC 27713

phone 919. 361. 5000
fax 919. 361. 2269
license number: C-0293, C-187

www.mcadamsco.com

CLIENT

ALLIANCE GROUP OF NC, LLC
7208 FALLS OF NEUSE RD, SUITE 101
RALEIGH, NORTH CAROLINA 27615
CONTACT: JACOB ANDERSON
PHONE: 919. 239. 9486

AGNC BROKERAGE | CONSULTING | PLANNING

PEARCE FARM - PHASES 1-3
CONSTRUCTION DRAWINGS - PACKAGE 1
BURLINGTON MILLS ROAD
TOWN OF ROLESVILLE, NORTH CAROLINA

CID-24-08

NORTH CAROLINA PROFESSIONAL ENGINEER SEAL 22630 WILLIAM T. O'DANIEL — NOT FOR CONSTRUCTION

REVISIONS

NO.	DATE	
1	02. 03. 2025	REVISED PER TOWN, CITY AND COUNTY COMMENTS

PLAN INFORMATION

PROJECT NO.	AGN23001
FILENAME	AWH20000-CD-PKG-02-EC4
CHECKED BY	.
DRAWN BY	.
SCALE	N.T.S.
DATE	12. 02. 2024

SHEET

EROSION CONTROL DETAILS

C6.19

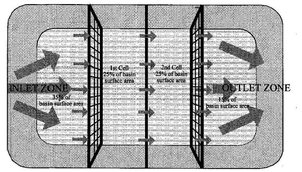

NOTES:
1. BAFFLE MATERIAL SHOULD BE SECURED AT THE BOTTOM AND SIDES USING STAPLES OR BY TRENCHING AS FOR SILT FENCE.
2. MOST OF THE SEDIMENT WILL ACCUMULATE IN THE 1ST BAY, WHICH SHOULD BE READILY ACCESSIBLE FOR MAINTENANCE.
3. PROVIDE 3 BAFFLES (USE TWO IF LESS THAN 20 FEET IN LENGTH), PROVIDE 5 BAFFLES FOR DRAINAGE AREAS GREATER THAN 10 ACRES.
4. BAFFLE SHALL BE 700 G/M2 COIR EROSION BLANKET.
5. TOPS OF BAFFLES SHOULD BE 2 INCHES LOWER THAN THE TOP OF THE BERMS
6. INSPECT BAFFLES FOR REPAIR ONCE A WEEK AND AFTER EACH RAINFALL

PLAN VIEW

CROSS SECTION

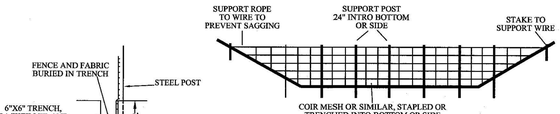

SECTION VIEW AT OPENING

WAKE COUNTY NORTH CAROLINA

EFFECTIVE: 01/31/08

STANDARD BAFFLES DETAIL

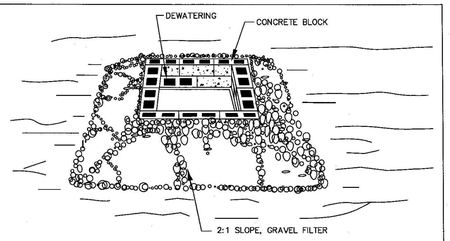

CONSTRUCTION SPECIFICATIONS

1. LAY ONE BLOCK ON EACH SIDE OF THE STRUCTURE ON ITS SIDE IN THE BOTTOM ROW TO ALLOW POOL DRAINAGE. THE FOUNDATION SHOULD BE EXCAVATED AT LEAST 2 INCHES BELOW THE CREST OF THE STORM DRAIN. PLACE THE BOTTOM ROW OF BLOCKS AGAINST THE EDGE OF THE STORM DRAIN FOR LATERAL SUPPORT AND TO AVOID WASHOUTS WHEN OVERFLOW OCCURS. IF NEEDED, GIVE LATERAL SUPPORT TO SUBSEQUENT ROWS BY PLACING 2x4 WOOD STUDS THROUGH BLOCK OPENINGS.
2. CAREFULLY FIT HARDWARE CLOTH OR COMPARABLE WIRE MESH WITH 1/2 INCH OPENINGS OVER ALL BLOCK OPENINGS TO HOLD GRAVEL IN PLACE.
3. USE CLEAN GRAVEL, 3/4 TO 1/2 INCH IN DIAMETER, PLACED 2 INCHES BELOW THE TOP OF THE BLOCK ON A 2:1 SLOPE OR FLATTER AND SMOOTH IT TO AN EVEN GRADE. DOT #57 WASHED STONE IS RECOMMENDED.

MAINTENANCE: INSPECT INLET PROTECTION AND REMOVE SEDIMENT AFTER EACH RAIN EVENT. GRAVEL SHOULD BE REPLACED AND REPAIRS MADE AS NEEDED.

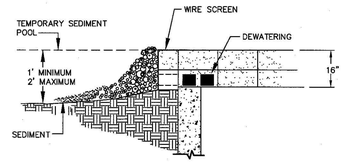

WAKE COUNTY NORTH CAROLINA

EFFECTIVE: 01/31/08

STANDARD BLOCK & GRAVEL DROP INLET PROTECTION

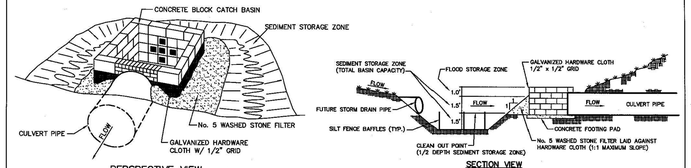

PERSPECTIVE VIEW

SECTION VIEW

USE OF CATCH BASIN RISER/FILTER ON FILL SITES

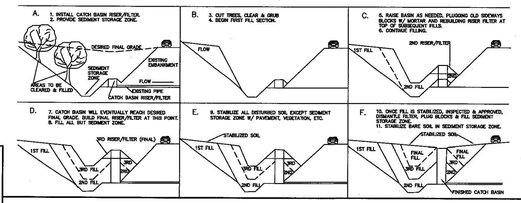

WAKE COUNTY NORTH CAROLINA

EFFECTIVE: 01/31/08

STANDARD CATCH BASIN RISER/FILTER

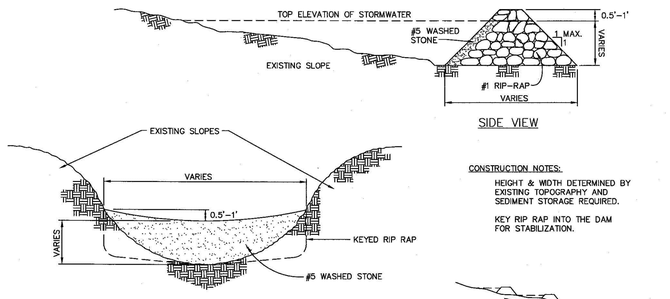

SIDE VIEW

CONSTRUCTION NOTES:

HEIGHT & WIDTH DETERMINED BY EXISTING TOPOGRAPHY AND SEDIMENT STORAGE REQUIRED.

KEY RIP RAP INTO THE DAM FOR STABILIZATION.

FRONT VIEW

STEP SEQUENCE

NOTE: REMOVE SEDIMENT ACCUMULATION FROM BEHIND CHECK DAMS TO PREVENT DAMAGE TO CHANNEL VEGETATION. FLOW SHOULD BE MAINTAINED THROUGH THE DAM.

WAKE COUNTY NORTH CAROLINA

EFFECTIVE: 01/31/08

STANDARD CHECK DAM

NOTES:

1. DIVERSION TO BE USED UPSLOPE OF A CONSTRUCTION SITE TO PREVENT STORM RUNOFF FROM ENTERING THE DISTURBED AREA.
2. IMMEDIATELY LINE AND STABILIZE BEFORE ANY DOWNSLOPE GRADING BEGINS (STABILIZATION MUST OCCUR BEFORE ISSUANCE OF A CERTIFICATE OF COMPLIANCE). STABILIZATION METHOD IS BASED ON VELOCITY OF OFFSITE DRAINAGE.
3. DIVERSIONS SHOULD ONLY BE USED FOR DRAINAGES 5 ACRES OR LESS.
4. ANY SEDIMENT LADEN WATER PRIOR TO STABILIZATION OF THE DIVERSION MUST BE DIVERTED INTO AN APPROVED EROSION AND SEDIMENT CONTROL BMP. CLEAN WATER SHOULD EMPTY INTO AN APPROVED OUTLET DEVICE.

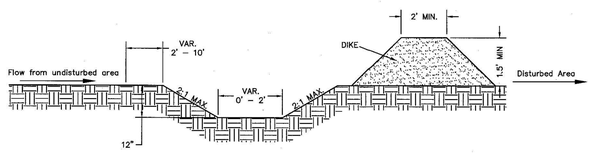

CROSS SECTIONAL VIEW

WAKE COUNTY NORTH CAROLINA

EFFECTIVE: 01/31/08

STANDARD CLEAN WATER DIVERSION

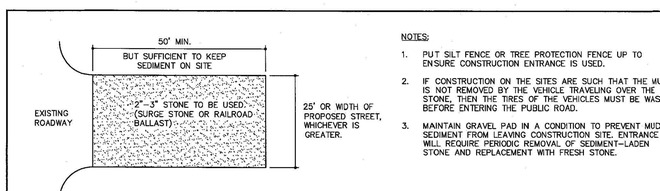

PLAN VIEW

NOTES:

1. PUT SILT FENCE OR TREE PROTECTION FENCE UP TO ENSURE CONSTRUCTION ENTRANCE IS USED.
2. IF CONSTRUCTION ON THE SITES ARE SUCH THAT THE MUD IS NOT REMOVED BY THE VEHICLE TRAVELING OVER THE STONE, THEN THE TIRES OF THE VEHICLES MUST BE WASHED BEFORE ENTERING THE PUBLIC ROAD.
3. MAINTAIN GRAVEL PAD IN A CONDITION TO PREVENT MUD OR SEDIMENT FROM LEAVING CONSTRUCTION SITE. ENTRANCE WILL REQUIRE PERIODIC REMOVAL OF SEDIMENT–LADEN STONE AND REPLACEMENT WITH FRESH STONE.

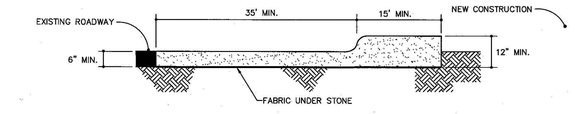

CROSS SECTION

WAKE COUNTY NORTH CAROLINA

EFFECTIVE: 01/31/08

STANDARD CONSTRUCTION ENTRANCE

NOTES:

1. TEMPORARY DIVERSION DITCH TO BE USED TO INTERCEPT FLOW AND/OR DIVERT TO A SEDIMENT CONTROL MEASURE OR BMP.
2. SILT SHALL BE REMOVED WHEN DITCH IS ONE–HALF FULL.
3. DITCH SHALL BE RECONSTRUCTED WHEN DAMAGED BY EQUIPMENT OR COVERED BY FILL.
4. STABILIZE DIVERSION DITCH BERM WITH TEMPORARY SEEDING, MULCH WITH TAC, AND/OR EROSION CONTROL NETTING.

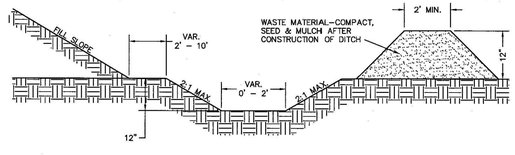

CROSS SECTIONAL VIEW

WAKE COUNTY NORTH CAROLINA

EFFECTIVE: 01/31/08

STANDARD TEMPORARY DIVERSION DITCH

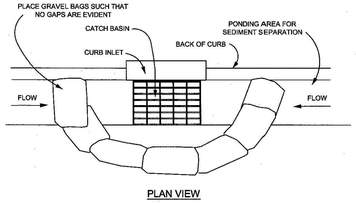

PLAN VIEW

NOTES:

1. PLACE GRAVEL BAG BARRIER ON GENTLY SLOPING STREET, WHERE WATER CAN POND AND ALLOW SEDIMENT TO SEPARATE FROM RUNNOFF.
2. USE SAND BAGS OF WOVEN GEOTEXTILE FABRIC (NOT BURLAP) AND FILL WITH $\frac{2}{3}$ INCH (OR SMALLER) GRAVEL. BAGS MUST BE LAYERED SUCH THAT NO GAPS ARE EVIDENT.
3. INSPECT BARRIERS AND REMOVE SEDIMENT AFTER EACH STORM EVENT, SEDIMENT AND GRAVEL MUST BE REMOVED FROM THE TRAVELED WAY IMMEDIATELY.
4. WHEN INSTALLING CURB INLET PROTECTION DEVICES, **NEVER** BLOCK THE CURB INLET.

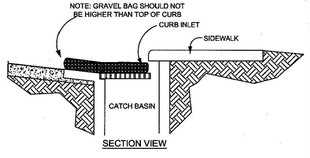

SECTION VIEW

WAKE COUNTY NORTH CAROLINA

EFFECTIVE: 01/31/08

STANDARD GRAVEL BAG CURB INLET PROTECTION

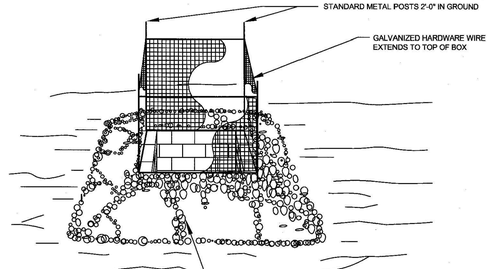

NOTE:

1. INSPECT INLET PROTECTION AND REMOVE SEDIMENT AFTER EACH RAIN EVENT. GRAVEL SHOULD BE REPLACED AND REPAIRS MADE AS NEEDED.

WAKE COUNTY NORTH CAROLINA

EFFECTIVE: 01/31/08

STANDARD GRAVEL YARD INLET PROTECTION

FINAL DRAWING - NOT RELEASED FOR CONSTRUCTION

X:\Projects\AGN\AGN23001\04-Production\Engineering\Construction Drawing\Current Drawing\AGN23001-EC4.dwg, 1/28/2025 1:01:49 PM, Sherrill Williams

McADAMS
The John R. McAdams Company, Inc.
2905 Meridian Parkway
Durham, NC 27713

phone 919. 361. 5000
fax 919. 361. 2269
license number: C-0293, C-187

www.mcadamsco.com

CLIENT

ALLIANCE GROUP OF NC, LLC
7208 FALLS OF NEUSE RD, SUITE 101
RALEIGH, NORTH CAROLINA 27615
CONTACT: JACOB ANDERSON
PHONE: 919. 239. 9486

AGNC BROKERAGE | CONSULTING | PLANNING

PEARCE FARM - PHASES 1-3
CONSTRUCTION DRAWINGS - PACKAGE 1
BURLINGTON MILLS ROAD
TOWN OF ROLESVILLE, NORTH CAROLINA

CID-24-08

NORTH CAROLINA PROFESSIONAL SEAL 22630 ENGINEER WILLIAM T. O'DANIEL — NOT FOR CONSTRUCTION

REVISIONS

NO.	DATE	
1	02. 03. 2025	REVISED PER TOWN, CITY AND COUNTY COMMENTS

PLAN INFORMATION

PROJECT NO.	AGN23001
FILENAME	AWH20000-CD-PKG-02-EC4
CHECKED BY	.
DRAWN BY	.
SCALE	N.T.S.
DATE	12. 02. 2024

SHEET

EROSION CONTROL DETAILS

C6.20

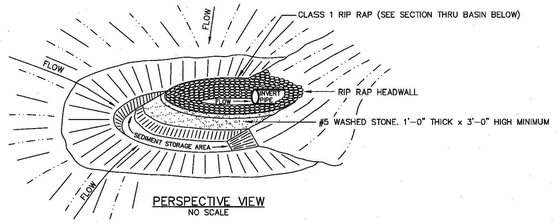

STANDARD HORSESHOE INLET PROTECTION

EFFECTIVE: 01/31/08

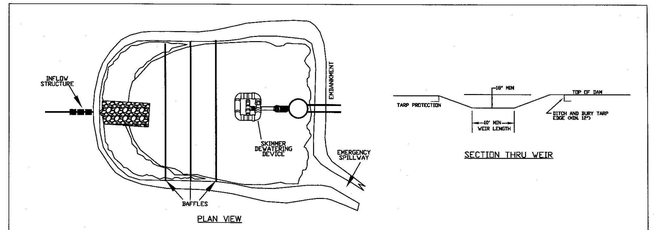

NOTES:
1) BASIN SHOULD BE CLEANED OUT WHEN CAPACITY REACHES AN ELEVATION REPRESENTING THAT THE BASIN IS HALF-FULL.
2) THE TARP USED TO PROTECT THE WEIR SHALL BE THE WIDTH SPECIFIED. THE LENGTH OF THE TARP SHALL BE ACCORDING TO AVAILABLE SUPPLY. IF MULTIPLE TARPS ARE TO BE USED, THEN TARPS SHALL BE OVERLAPPED AT LEAST 12". THE UPSTREAM 12" TARP SHALL OVERLAP THE DOWNSTREAM TARP. THE TARP SHALL BE 50 MIL. HEAVY DUTY SILVER TARPAULINS OR EQUIVALENT FOR U.V. RESISTANCE.
3) PROVIDE A MINIMUM OF THREE POROUS BAFFLES TO EVENLY DISTRIBUTE FLOW ACROSS THE BASIN, REDUCING TURBULENCE.
4) BAFFLE MATERIAL MUST BE SECURED AT THE BOTTOM AND SIDES USING STAPLES OR BY TRENCHING AS FOR A SILT FENCE.
5) MOST OF THE SEDIMENT WILL ACCUMULATE IN THE FIRST BAY, SO THIS SHOULD BE READILY AVAILABLE FOR MAINTENANCE.
6) DURING THE CONSTRUCTION PHASE OF THE PROJECT, PERMANENT STORMWATER RISER SHALL ONLY DEWATER FROM THE TOP OF PIPE.
7) POND SHALL NOT BE CONVERTED FOR STORMWATER USE UNTIL APPROVED BY ENVIRONMENTAL ENGINEER.

STANDARD SKIMMER ATTACHED TO PERMANENT RISER

EFFECTIVE: 01/31/08

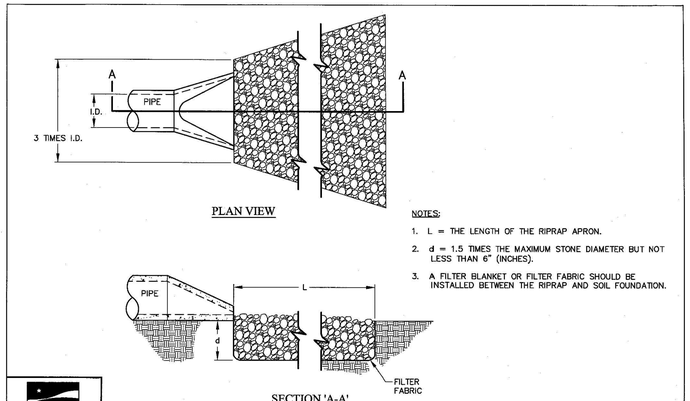

NOTES:
1. L = THE LENGTH OF THE RIPRAP APRON.
2. d = 1.5 TIMES THE MAXIMUM STONE DIAMETER BUT NOT LESS THAN 6" (INCHES).
3. A FILTER BLANKET OR FILTER FABRIC SHOULD BE INSTALLED BETWEEN THE RIPRAP AND SOIL FOUNDATION.

STANDARD PIPE OUTLET TO FLAT AREA
NO WELL-DEFINED CHANNEL

EFFECTIVE: 01/31/08

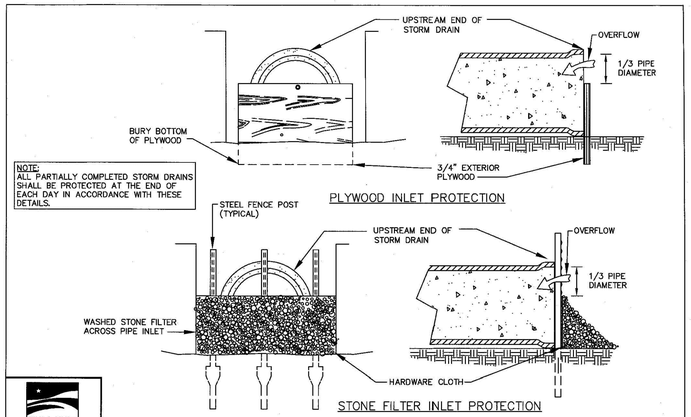

NOTE:
ALL PARTIALLY COMPLETED STORM DRAINS SHALL BE PROTECTED AT THE END OF EACH DAY IN ACCORDANCE WITH THESE DETAILS.

STANDARD PIPE INLET PROTECTION (PLYWOOD & STONE)

EFFECTIVE: 01/31/08

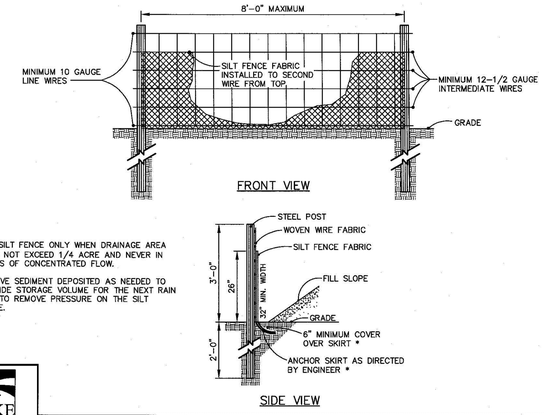

NOTE:
1. USE SILT FENCE ONLY WHEN DRAINAGE AREA DOES NOT EXCEED 1/4 ACRE AND NEVER IN AREAS OF CONCENTRATED FLOW.
2. REMOVE SEDIMENT DEPOSITED AS NEEDED TO PROVIDE STORAGE VOLUME FOR THE NEXT RAIN AND TO REMOVE PRESSURE ON THE SILT FENCE.

STANDARD TEMPORARY SILT FENCE

EFFECTIVE: 01/31/08

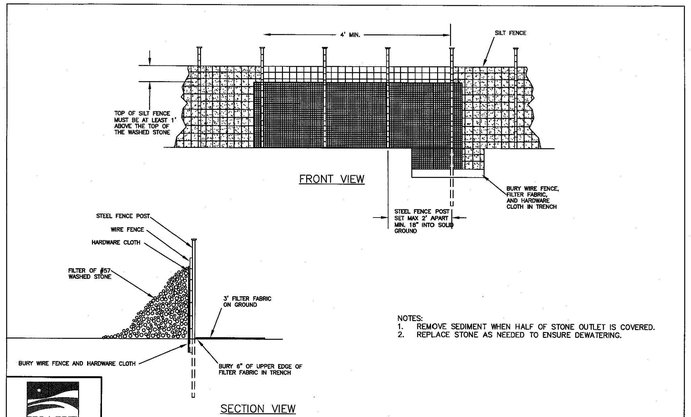

NOTES:
1. REMOVE SEDIMENT WHEN HALF OF STONE OUTLET IS COVERED.
2. REPLACE STONE AS NEEDED TO ENSURE DEWATERING.

STANDARD SILT FENCE OUTLET

EFFECTIVE: 01/31/08

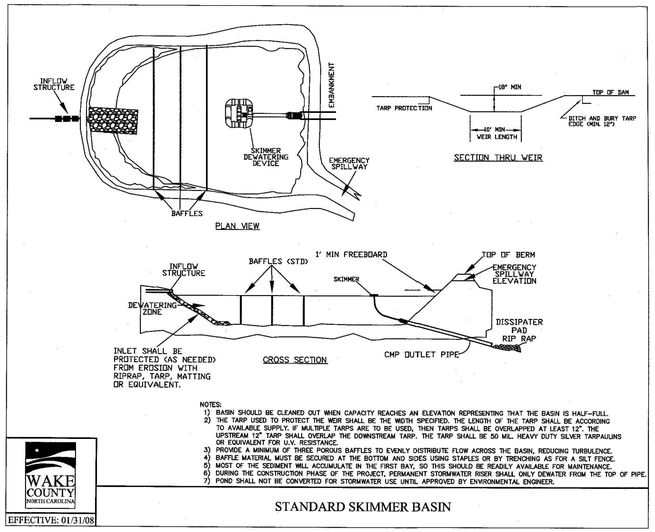

NOTES:
1) BASIN SHOULD BE CLEANED OUT WHEN CAPACITY REACHES AN ELEVATION REPRESENTING THAT THE BASIN IS HALF-FULL.
2) THE TARP USED TO PROTECT THE WEIR SHALL BE THE WIDTH SPECIFIED. THE LENGTH OF THE TARP SHALL BE ACCORDING TO AVAILABLE SUPPLY. IF MULTIPLE TARPS ARE TO BE USED, THEN TARPS SHALL BE OVERLAPPED AT LEAST 12". THE UPSTREAM 12" TARP SHALL OVERLAP THE DOWNSTREAM TARP. THE TARP SHALL BE 50 MIL. HEAVY DUTY SILVER TARPAULINS OR EQUIVALENT FOR U.V. RESISTANCE.
3) PROVIDE A MINIMUM OF THREE POROUS BAFFLES TO EVENLY DISTRIBUTE FLOW ACROSS THE BASIN, REDUCING TURBULENCE.
4) BAFFLE MATERIAL MUST BE SECURED AT THE BOTTOM AND SIDES USING STAPLES OR BY TRENCHING AS FOR A SILT FENCE.
5) MOST OF THE SEDIMENT WILL ACCUMULATE IN THE FIRST BAY, SO THIS SHOULD BE READILY AVAILABLE FOR MAINTENANCE.
6) DURING THE CONSTRUCTION PHASE OF THE PROJECT, PERMANENT STORMWATER RISER SHALL ONLY DEWATER FROM THE TOP OF PIPE.
7) POND SHALL NOT BE CONVERTED FOR STORMWATER USE UNTIL APPROVED BY ENVIRONMENTAL ENGINEER.

STANDARD SKIMMER BASIN

EFFECTIVE: 01/31/08

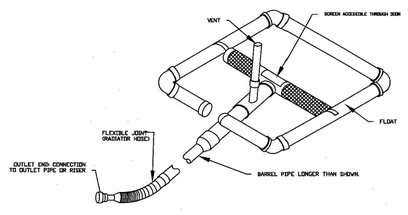

STANDARD SKIMMER DETAIL

EFFECTIVE: 01/31/08

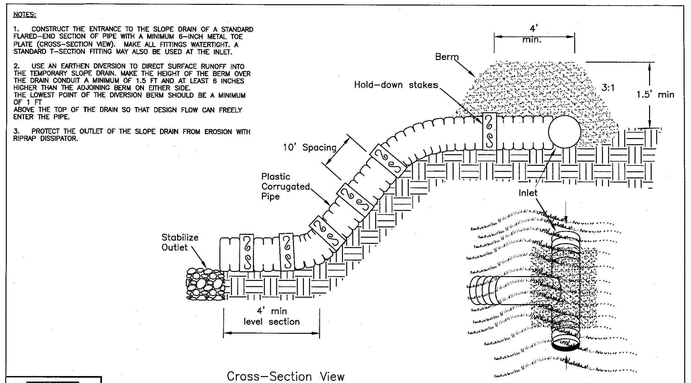

STANDARD TEMPORARY SLOPE DRAIN

EFFECTIVE: 01/31/08

McADAMS
The John R. McAdams Company, Inc.
2905 Meridian Parkway
Durham, NC 27713

phone 919. 361. 5000
fax 919. 361. 2269
license number: C-0293, C-187

www.mcadamsco.com

CLIENT

ALLIANCE GROUP OF NC, LLC
7208 FALLS OF NEUSE RD, SUITE 101
RALEIGH, NORTH CAROLINA 27615
CONTACT: JACOB ANDERSON
PHONE: 919. 239. 9486

AGNC BROKERAGE | CONSULTING | PLANNING

PEARCE FARM - PHASES 1-3
CONSTRUCTION DRAWINGS - PACKAGE 1
BURLINGTON MILLS ROAD
TOWN OF ROLESVILLE, NORTH CAROLINA

CID-24-08

NORTH CAROLINA PROFESSIONAL ENGINEER SEAL 22630 WILLIAM T. CRANFILL

REVISIONS

NO.	DATE	
1	02. 03. 2025	REVISED PER TOWN, CITY AND COUNTY COMMENTS

PLAN INFORMATION

PROJECT NO.	AGN23001
FILENAME	AWH20000-CD-PKG-02-EC4
CHECKED BY	.
DRAWN BY	.
SCALE	N.T.S.
DATE	12. 02. 2024

SHEET

EROSION CONTROL DETAILS

C6.21

FINAL DRAWING - NOT RELEASED FOR CONSTRUCTION

X:\Projects\AGN\AGN23001\04-Production\Engineering\Construction Drawings\Current Drawings\AGN23001-EC4.dwg, 1/28/2025 1:02:12 PM, Sherrill Williams

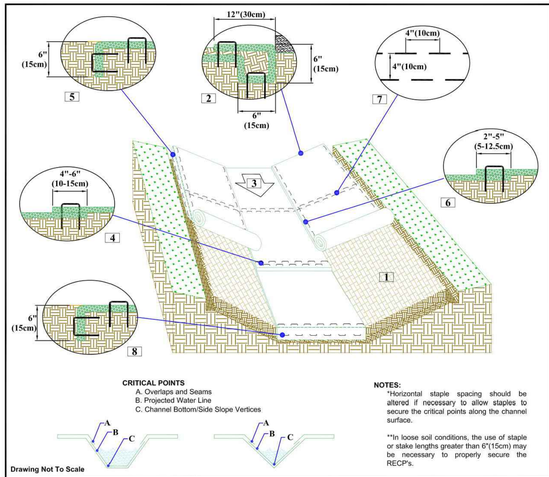

CRITICAL POINTS

A. Overlaps and Seams
B. Projected Water Line
C. Channel Bottom/Side Slope Vertices

NOTES:

*Horizontal staple spacing should be altered if necessary to allow staples to secure the critical points along the channel surface.

**In loose soil conditions, the use of staple or stake lengths greater than 6"(15cm) may be necessary to properly secure the RECP's.

Drawing Not To Scale

CHANNEL INSTALLATION DETAIL

1. Prepare soil before installing rolled erosion control products (RECPs), including any necessary application of lime, fertilizer, and seed.
2. Begin at the top of the channel by anchoring the RECPs in a 6"(15cm) deep X 6"(15cm) wide trench with approximately 12"(30cm) of RECPs extended beyond the up-slope portion of the trench. Use ShoreMax mat at the channel/culvert outlet as supplemental scour protection as needed. Anchor the RECPs with a row of staples/stakes approximately 12"(30cm) apart in the bottom of the trench. Backfill and compact the trench after stapling. Apply seed to the compacted soil and fold the remaining 12"(30cm) portion of RECPs back over the seed and compacted soil. Secure RECPs over compacted soil with a row of staples/stakes spaced approximately 12" apart across the width of the RECPs.
3. Roll center RECPs in direction of water flow in bottom of channel. RECPs will unroll with appropriate side against the soil surface. All RECPs must be securely fastened to soil surface by placing staples/stakes in appropriate locations as shown in the staple pattern guide.
4. Place consecutive RECPs end-over-end (Shingle style) with a 4"-6" overlap. Use a double row of staples staggered 4" apart and 4" on center to secure RECPs.
5. Full length edge of RECPs at top of side slopes must be anchored with a row of staples/stakes approximately 12"(30cm) apart in a 6"(15cm) deep X 6"(15cm) wide trench. Backfill and compact the trench after stapling.
6. Adjacent RECPs must be overlapped approximately 2"-5" (5-12.5cm) (Depending on RECPs type) and stapled.
7. In high flow channel applications a staple check slot is recommended at 30 to 40 foot (9 -12m) intervals. Use a double row of staples staggered 4"(10cm) apart and 4"(10cm) on center over entire width of the channel.
8. The terminal end of the RECPs must be anchored with a row of staples/stakes approximately 12" (30cm) apart in a 6"(15cm) deep X 6"(15cm) wide trench. Backfill and compact the trench after stapling.

NORTH AMERICAN GREEN
5401 St. Wendel - Cynthiana Rd. Poseyville, IN 47633
PH: 800-722-2040 www.nagreen.com

Disclaimer:
The information presented herein is general design information only. For specific applications, consult an independent professional for further design guidance.

Drawn on: 5-4-17

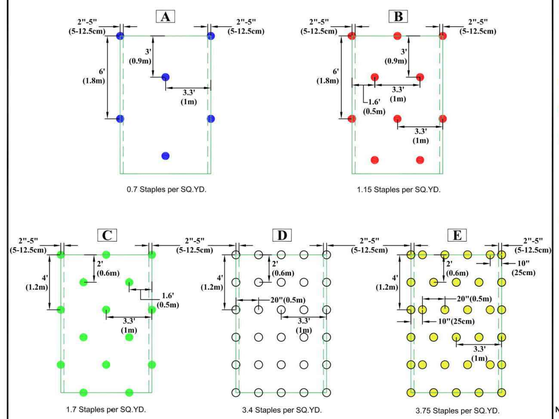

STAPLE PATTERN GUIDE

- 4:1 Slopes (A)
- 3:1 Slopes (B)
- 2:1 Slopes (C)
- 1:1 & Steeper Slopes (D)
- Medium/High Flow Channel (D)
- High Flow Channel And Shoreline (E)

NOTES:

* Use ECMDS® for more accurate staple pattern selection.

Drawing Not To Scale

NORTH AMERICAN GREEN
5401 St. Wendel - Cynthiana Rd. Poseyville, IN 47633
PH: 800-722-2040 www.nagreen.com

Disclaimer:
The information presented herein is general design information only. For specific applications, consult an independent professional for further design guidance.

Drawn on: 5-4-17

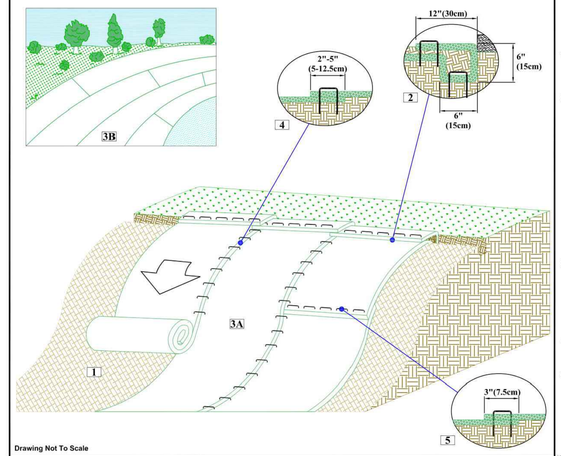

Drawing Not To Scale

SLOPE INSTALLATION DETAIL

1. Prepare soil before installing rolled erosion control products (RECPs), including any necessary application of lime, fertilizer, and seed.
2. Begin at the top of the slope by anchoring the RECPs in a 6"(15cm) deep X 6"(15cm) wide trench with approximately 12" (30cm) of RECPs extended beyond the up-slope portion of the trench. Anchor the RECPs with a row of staples/stakes approximately 12" (30cm) apart in the bottom of the trench. Backfill and compact the trench after stapling. Apply seed to the compacted soil and fold the remaining 12"(30cm) portion of RECPs back over the seed and compacted soil. Secure RECPs over compacted soil with a row of staples/stakes spaced approximately 12"(30cm) apart across the width of the RECPs.
3. Roll the RECPs (A) down or (B) horizontally across the slope. RECPs will unroll with appropriate side against the soil surface. All RECPs must be securely fastened to soil surface by placing staples/stakes in appropriate locations as shown in the staple pattern guide.
4. The edges of parallel RECPs must be stapled with approximately 2" - 5" (5-12.5cm) overlap depending on the RECPs type.
5. Consecutive RECPs spliced down the slope must be end over end (Shingle style) with an approximate 3"(7.5cm) overlap. Staple through overlapped area, approximately 12"(30cm) apart across entire RECPs width.

*NOTE:
In loose soil conditions, the use of staple or stake lengths greater than 6"(15cm) may be necessary to properly secure the RECPs.

NORTH AMERICAN GREEN
5401 St. Wendel - Cynthiana Rd. Poseyville, IN 47633
PH: 800-722-2040 www.nagreen.com

Disclaimer:
The information presented herein is general design information only. For specific applications, consult an independent professional for further design guidance.

Drawn on: 5-4-17

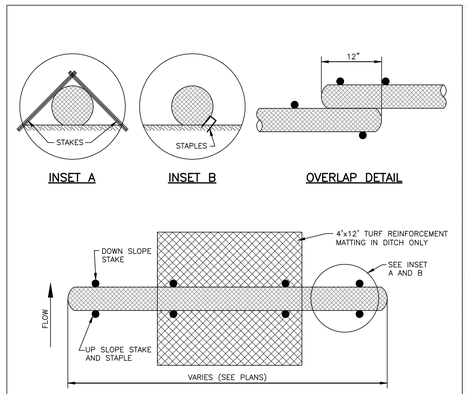

NOTES:

1. USE MINIMUM 12" DIAMETER WATTLE (LARGER WATTLES MAY BE REQUIRED TO KEEP SEDIMENT ON SITE).
2. USE 2" WOODEN STAKES WITH A 2" NOMINAL CROSS SECTION.
3. INSTALL A MINIMUM OF TWO UP SLOPE STAKES AND 4 DOWN SLOPE STAKES AT AN ANGLE TO WEDGE WATTLE TO EXISTING GRADE.
4. PROVIDE STAPLES OF 0.125" DIAMETER STEEL WIRE FORMED INTO A U SHAPE NOT LESS THAN 6" IN LENGTH.
5. INSTALL STAPLES APPROXIMATELY EVERY 1 LINEAR FOOT ON THE UP SLOPE SIDE OF THE WATTLE AND AT EACH END TO SECURE IT TO THE SOIL.

MAINTENANCE:

1. WATTLES SHOULD BE CHECKED AND CLEARED OF ACCUMULATED DEBRIS AND SEDIMENT.
2. REPLACE AS REQUIRED.

TEMPORARY WATTLE DETAIL

N.T.S.

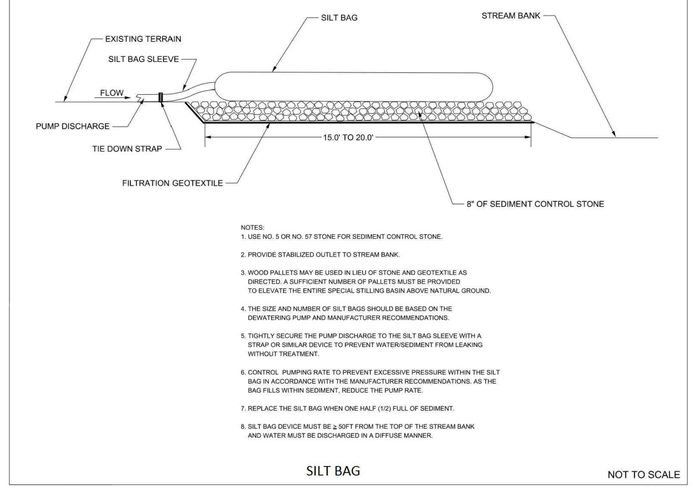

NOTES:
1. USE NO. 5 OR NO. 57 STONE FOR SEDIMENT CONTROL STONE.
2. PROVIDE STABILIZED OUTLET TO STREAM BANK.
3. WOOD PALLETS MAY BE USED IN LIEU OF STONE AND GEOTEXTILE AS DIRECTED. A SUFFICIENT NUMBER OF PALLETS MUST BE PROVIDED TO ELEVATE THE ENTIRE SPECIAL STILLING BASIN ABOVE NATURAL GROUND.
4. THE SIZE AND NUMBER OF SILT BAGS SHOULD BE BASED ON THE DEWATERING PUMP AND MANUFACTURER RECOMMENDATIONS.
5. TIGHTLY SECURE THE PUMP DISCHARGE TO THE SILT BAG SLEEVE WITH A STRAP OR SIMILAR DEVICE TO PREVENT WATER/SEDIMENT FROM LEAKING WITHOUT TREATMENT.
6. CONTROL PUMPING RATE TO PREVENT EXCESSIVE PRESSURE WITHIN THE SILT BAG IN ACCORDANCE WITH THE MANUFACTURER RECOMMENDATIONS. AS THE BAG FILLS WITHIN SEDIMENT, REDUCE THE PUMP RATE.
7. REPLACE THE SILT BAG WHEN ONE HALF (1/2) FULL OF SEDIMENT.
8. SILT BAG DEVICE MUST BE ≥ 50FT FROM THE TOP OF THE STREAM BANK AND WATER MUST BE DISCHARGED IN A DIFFUSE MANNER.

SILT BAG

NOT TO SCALE

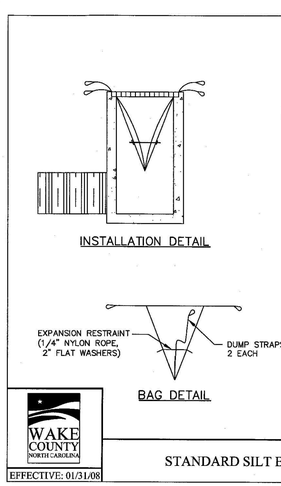

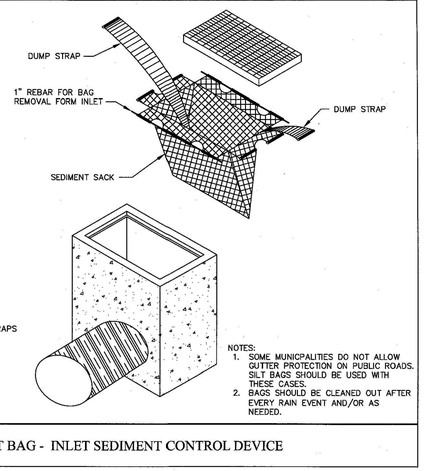

NOTES:
1. SOME MUNICPALITIES DO NOT ALLOW GUTTER PROTECTION ON PUBLIC ROADS. SILT BAGS SHOULD BE USED WITH THESE CASES.
2. BAGS SHOULD BE CLEANED OUT AFTER EVERY RAIN EVENT AND/OR AS NEEDED.

WAKE COUNTY NORTH CAROLINA
EFFECTIVE: 01/31/08

STANDARD SILT BAG - INLET SEDIMENT CONTROL DEVICE

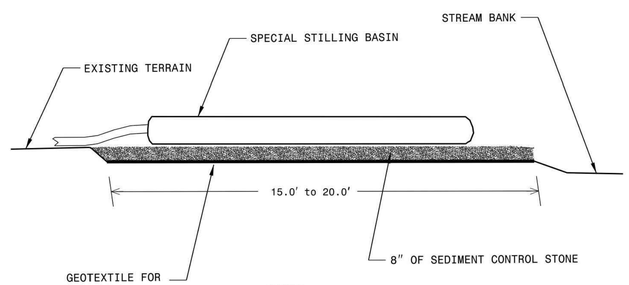

NOTES

USE NO. 5 OR NO. 57 STONE FOR SEDIMENT CONTROL STONE.

PROVIDE STABILIZED OUTLET TO STREAM BANK.

WOOD PALLETS MAY BE USED IN LIEU OF STONE AND GEOTEXTILE AS DIRECTED. A SUFFICIENT NUMBER OF PALLETS MUST BE PROVIDED TO ELEVATE THE ENTIRE SPECIAL STILLING BASIN ABOVE NATURAL GROUND.

NOT TO SCALE

STATE OF NORTH CAROLINA DEPT. OF TRANSPORTATION DIVISION OF HIGHWAYS RALEIGH, N.C.

1-18

ROADWAY STANDARD DRAWING FOR **SPECIAL STILLING BASIN**

SHEET 1 OF 1
1630.06

TEMPORARY SEDIMENT TRAP DESIGN CRITERIA	
DRAINAGE AREA (ACRES)	< 1 AC.
MIN. LENGTH TO WIDTH RATIO	2:1
MIN. VOLUME REQUIRED	1800 (CU. FT. PER AC. DISTURBED)

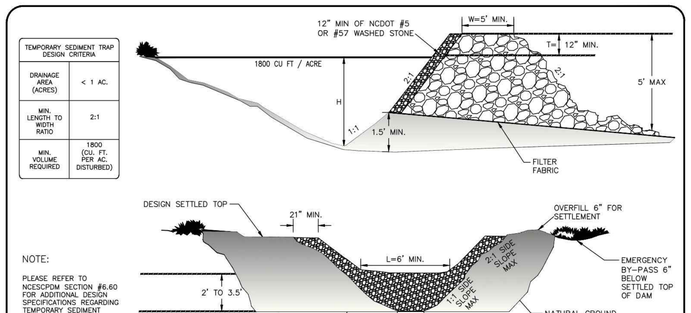

NOTE:

PLEASE REFER TO NCESCPOM SECTION #6.60 FOR ADDITIONAL DESIGN SPECIFICATIONS REGARDING TEMPORARY SEDIMENT TRAPS.

DATA BLOCK

NOT TO SCALE

TRAP NO.	DRAINAGE AREA (ACRES)	DENUDED AREA (ACRES)	Q10 (CFS)	TRAP VOLUME REQUIRED (CUBIC FT.)	TRAP VOLUME PROVIDED (CUBIC FT.)	CLEANOUT DEPTH (FT.) H/2	H (FEET)	L (FEET)	T (FEET)	W (FEET)	X (FEET)
RB-1	1	2.45	7.25	4410	5622	0.75	1.5	10	1	5	6
RB-2	0.15	0.15	0.44	270	280	1	2	6	1	5	6
RB-3	0.09	0.09	0.27	162	180	1	2	6	1	5	6
RB-4	0.14	0.14	0.41	252	260	1	2	6	1	5	6
RB-5	0.10	0.10	0.30	180	180	1	2	6	1	5	6

RIP RAP BASIN

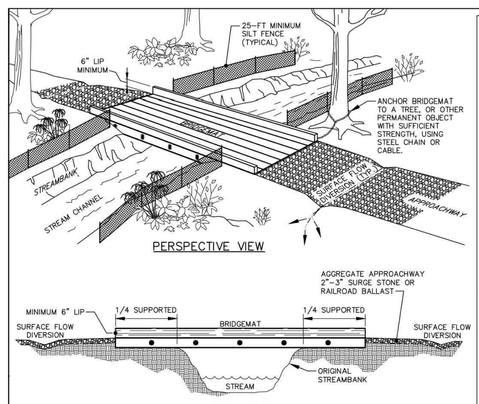

INSTALLATION NOTES:

1. REFER TO "NORTH CAROLINA DIVISION OF FOREST RESOURCES" LITERATURE, INSTALLATION MAINTENANCE GUIDELINES, & "NORTH CAROLINA FORESTRY BMP MANUAL–2006".
2. INSTALL WATER DIVERSION DEVICES (WATER BARS, TURNOUTS, BROAD–BASED DIPS, ETC.) ON BOTH SIDES OF THE MATS.
3. STABILIZE EXPOSED MINERAL SOIL WITH TREE TOPS OR BRUSH DURING MAT INSTALLATION, AND SEEDING/MULCH AFTER MAT REMOVAL.
4. INSTALL MATS TO CREATE A MINIMUM TEN FOOT BRIDGE WIDTH.
5. INCLUDE COARSE AGGREGATE ON THE APPROACHWAY FOR A MINIMUM OF 25 FEET AND SILT FENCE ALONG STREAMBANKS ADJACENT TO CROSSING FOR A MINIMUM OF 25 FEET.

MAINTENANCE NOTES:

1. KEEP MATS' SURFACE FREE OF MINERAL SOIL AND DEBRIS THAT COULD ENTER STREAM.
2. PERIODICALLY CHECK MAT HARDWARE; RETIGHTEN NUTS & CABLE CLAMPS AS NECESSARY TO MAINTAIN BRIDGE STRENGTH AND INTEGRITY.
3. IMMEDIATELY REMOVE ANY DEBRIS WHICH ENTERS THE STREAM AT THE CROSSING LOCATION.

REMOVAL NOTES:

1. CLEAN OFF BRIDGE SURFACE.
2. REMOVE MATS BY USING MAT CABLE LOOP OR SKIDDER GRAPPLE.
3. PERMANENTLY STABILIZE DISTURBED PORTIONS OF STREAMBANK AND APPROACH ROADS WITH PERENNIAL GRASSES,/MULCH (OR WETLAND MIX WHEN APPLICABLE).
4. LEAVE APPROPRIATE WATER DIVERSION STRUCTURES IN PLACE ON BOTH SIDES OF STREAM.
5. RESTORE THE STREAM CHANNEL TO ITS ORIGINAL CROSS–SECTION, AND SMOOTH AND APPROPRIATELY STABILIZE ALL DISTURBED AREAS.

STANDARD TEMPORARY STREAM CROSSING OPTION

FINAL DRAWING - NOT RELEASED FOR CONSTRUCTION

McADAMS
The John R. McAdams Company, Inc.
2905 Meridian Parkway
Durham, NC 27713

phone 919. 361. 5000
fax 919. 361. 2269
license number: C-0293, C-187

www.mcadamsco.com

CLIENT

ALLIANCE GROUP OF NC, LLC
7208 FALLS OF NEUSE RD, SUITE 101
RALEIGH, NORTH CAROLINA 27615
CONTACT: JACOB ANDERSON
PHONE: 919. 239. 9486

AGNC BROKERAGE | CONSULTING | PLANNING

PEARCE FARM - PHASES 1-3
CONSTRUCTION DRAWINGS - PACKAGE 1

BURLINGTON MILLS ROAD
TOWN OF ROLESVILLE, NORTH CAROLINA

CID-24-08

NORTH CAROLINA PROFESSIONAL ENGINEER SEAL 22630 WILLIAM T. CRANFILL

REVISIONS

NO.	DATE	
1	02. 03. 2025	REVISED PER TOWN, CITY AND COUNTY COMMENTS

PLAN INFORMATION

PROJECT NO.	AGN23001
FILENAME	AWH20000-CD-PKG-02-EC4
CHECKED BY	.
DRAWN BY	.
SCALE	N.T.S.
DATE	12. 02. 2024

SHEET

EROSION CONTROL DETAILS

C6.22

X:\Projects\AGN\AGN23001\04 Production\Engineering\Construction Drawings\Current Drawing\[AGN23001 EC4.dwg, 1/28/2025 1:02:33 PM, Sherrill Williams

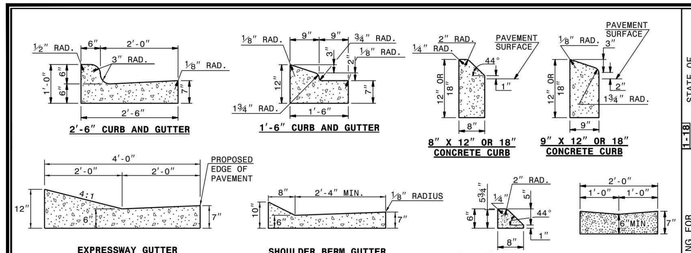

SECTION VIEW OF CURBS OR CURBS AND GUTTERS

GENERAL NOTES:
- PLACE CONTRACTION JOINTS AT 10' INTERVALS, EXCEPT THAT A 15' SPACING MAY BE USED WHEN A MACHINE IS USED OR WHEN SATISFACTORY SUPPORT FOR THE FACE FORM CAN BE OBTAINED WITHOUT THE USE OF TEMPLATES AT 10' INTERVALS.
- JOINT SPACING MAY BE ALTERED IF REQUIRED BY THE ENGINEER.
- CONTRACTION JOINTS MAY BE INSTALLED WITH THE USE OF TEMPLATES OR FORMED BY OTHER APPROVED METHODS. CONSTRUCT NON-TEMPLATE FORMED JOINTS A MIN. OF 1½" DEEP.
- FILL ALL CONSTRUCTION JOINTS, EXCEPT IN 8"x6" MEDIAN CURB, WITH JOINT FILLER AND SEALER.
- SPACE EXPANSION JOINTS AT 90' INTERVALS AND ADJACENT TO ALL RIGID OBJECTS.

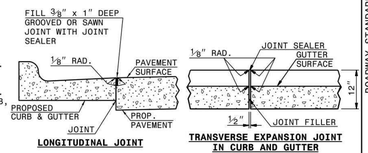

SECTION VIEW OF JOINTS

STATE OF NORTH CAROLINA DEPT. OF TRANSPORTATION DIVISION OF HIGHWAYS RALEIGH, N.C.

1-18

ROADWAY STANDARD DRAWING FOR
CONCRETE CURB, GUTTER AND CURB & GUTTER

SHEET 1 OF 3
846.01

NOTES:

CONSTRUCT STANDARD SIDEWALK 5' WIDE AND 4" THICK UNLESS OTHERWISE DENOTED ON PLANS.

PLACE A GROOVE JOINT 1" DEEP WITH ⅛" RADII IN THE CONCRETE SIDEWALK AT 5' INTERVALS. ONE ½" EXPANSION JOINT WILL BE REQUIRED AT 50' INTERVALS. A ½" EXPANSION JOINT WILL BE REQUIRED WHERE THE SIDEWALK JOINS ANY RIGID STRUCTURE.

SEE STD. DWG. 848.05 FOR CURB RAMP LOCATION REQUIREMENTS AND CONSTRUCTION GUIDELINES.

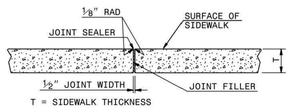

TRANSVERSE EXPANSION JOINT IN SIDEWALK

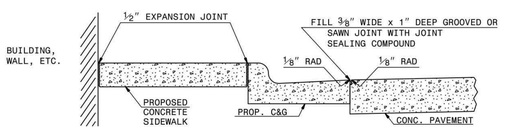

DETAILS SHOWING JOINTS IN CONCRETE SIDEWALK

STATE OF NORTH CAROLINA DEPT. OF TRANSPORTATION DIVISION OF HIGHWAYS RALEIGH, N.C.

1-18

ROADWAY STANDARD DRAWING FOR
CONCRETE SIDEWALK

SHEET 1 OF 1
848.01

CROSSWALK PLACEMENT GUIDANCE

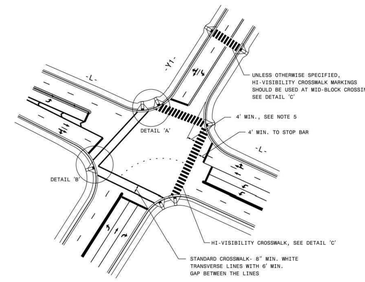

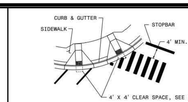

DETAIL 'A'- DUAL CURB RAMPS

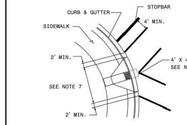

DETAIL 'B'- SINGLE DIAGONAL CURB RAMP

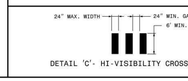

DETAIL 'C'- HI-VISIBILITY CROSSWALK

GENERAL NOTES:
1- USE THE DETAILS ABOVE AND THE FOLLOWING NOTES FOR GUIDANCE IN PLACING CROSSWALK MARKINGS. REFER TO NCDOT ROADWAY STANDARD DRAWINGS, MUTCD AND ADA STANDARDS FOR ADDITIONAL GUIDANCE.

2- THE LOCATION AND TYPE OF CROSSWALK MARKINGS SHOWN ON THE ABOVE DETAILS ARE FOR REFERENCE ONLY. LOCATE CROSSWALK MARKINGS AS SHOWN ON THE PROJECT DETAIL SHEETS OR AS DIRECTED BY THE ENGINEER. THE CROSSWALK MARKING TYPE, STANDARD OR HI-VISIBILITY, SHALL BE INSTALLED AS SPECIFIED ON THE PROJECT DETAIL SHEETS OR AS DIRECTED BY THE ENGINEER.

3- THE STANDARD CROSSWALK IS TWO WHITE 8" MIN. TRANSVERSE LINES WITH A 6' MIN. GAP BETWEEN THE LINES. THE HI-VISIBILITY CROSSWALK IS WHITE 24" MAX. WIDE LONGITUDINAL LINES WITH 24" MIN. GAPS BETWEEN LINES, SEE DETAIL 'C'. HI-VISIBILITY CROSSWALKS SHOULD BE A MINIMUM OF 6' WIDE. CURB RAMPS SHALL BE WHOLLY CONTAINED WITHIN THE MARKINGS, EXCLUDING ANY FLARES.

4- STOP BARS SHOULD BE PLACED A 4' MIN. IN ADVANCE OF NEAREST CROSSWALK LINE.

5- SET BACK DISTANCE FROM INSIDE CROSSWALK MARKING TO NEAREST EDGE OF TRAVEL IS 4' MIN.

6- BEYOND THE BOTTOM GRADE BREAK, A CLEAR SPACE OF 4' X 4' MIN. SHALL BE PROVIDED WITHIN THE MARKINGS.

7- SINGLE DIAGONAL CURB RAMPS WITH FLARED SIDES SHALL HAVE A SEGMENT OF CURB 2' MIN. LONG LOCATED ON EACH SIDE OF THE CURB RAMP AND WITHIN THE MARKED CROSSING, SEE DETAIL 'B'.

8- CURB RAMPS SHALL BE CONSTRUCTED IN ACCORDANCE TO THE LATEST NCDOT ROADWAY STANDARD DRAWINGS. CURB RAMPS THROUGH MEDIAN ISLANDS, SINGLE RAMPS AT DUAL CROSSWALKS OR LIMITED R/W SITUATIONS, WILL BE HANDLED BY SPECIAL DETAILS. CONTACT THE CONTRACT STANDARDS AND DEVELOPMENT UNIT FOR DETAILS OR A SPECIAL DESIGN.

STATE OF NORTH CAROLINA DEPT. OF TRANSPORTATION DIVISION OF HIGHWAYS RALEIGH, N.C.

1-18

ROADWAY STANDARD DRAWING FOR
PAVEMENT MARKINGS
PEDESTRIAN CROSSWALKS

SHEET 1 OF 1
1205.07

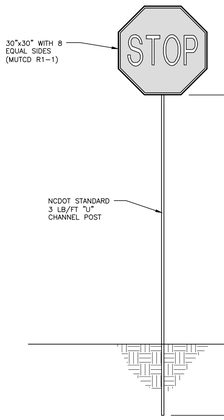

STOP SIGN DETAIL
N.T.S.

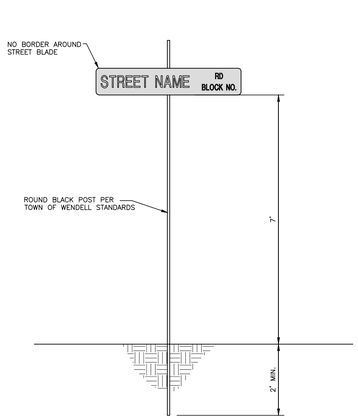

STREET SIGN DETAIL
N.T.S.

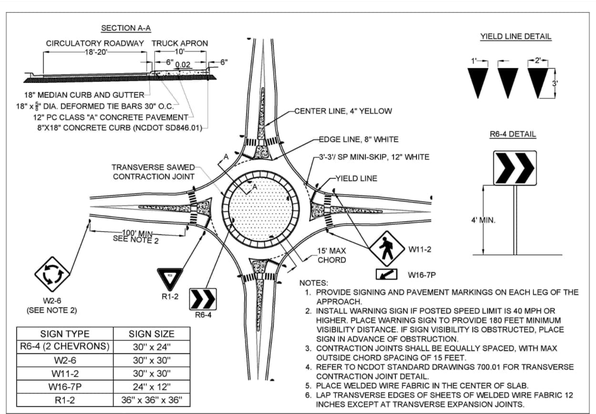

SIGN TYPE	SIGN SIZE
R6-4 (2 CHEVRONS)	30" x 24"
W2-6	30" x 30"
W11-2	30" x 30"
W16-7P	24" x 12"
R1-2	36" x 36" x 36"

NOTES:
1. PROVIDE SIGNING AND PAVEMENT MARKINGS ON EACH LEG OF THE APPROACH.
2. INSTALL WARNING SIGN IF POSTED SPEED LIMIT IS 40 MPH OR HIGHER. PLACE WARNING SIGN TO PROVIDE 180 FEET MINIMUM VISIBILITY DISTANCE. IF SIGN VISIBILITY IS OBSTRUCTED, PLACE SIGN IN ADVANCE OF OBSTRUCTION.
3. CONTRACTION JOINTS SHALL BE EQUALLY SPACED, WITH MAX OUTSIDE CHORD SPACING OF 15 FEET.
4. REFER TO NCDOT STANDARD DRAWINGS 700.01 FOR TRANSVERSE CONTRACTION JOINT DETAIL.
5. PLACE WELDED WIRE FABRIC IN THE CENTER OF SLAB.
6. LAP TRANSVERSE EDGES OF SHEETS OF WELDED WIRE FABRIC 12 INCHES EXCEPT AT TRANSVERSE EXPANSION JOINTS.

SINGLE-LANE ROUNDABOUT

TYPE 1 OR TYPE 3 MARKERS FOR OBSTRUCTIONS WITHIN THE ROADWAY

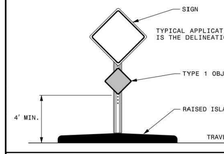

TYPE 4 MARKERS FOR END OF ROADWAY

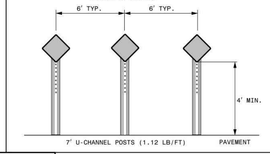

TYPE 2 OR TYPE 3 MARKERS FOR OBSTRUCTIONS ADJACENT TO THE ROADWAY

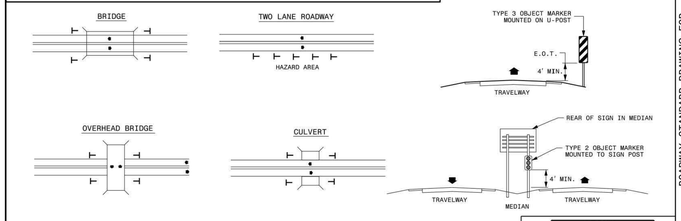

TYPICAL APPLICATIONS OF TYPE 2 OR TYPE 3 OBJECT MARKERS INCLUDES DELINEATION OF BRIDGE PIERS, ABUTMENTS, HANDRAILS, CULVERT HEADWALLS, NARROW SHOULDERS, DROP-OFFS, OR OTHER UNDESIRABLE CONDITIONS WHEN GUARDRAIL OR OTHER ROADSIDE PROTECTION IS NOT IN PLACE.

LEGEND
- OBJECT MARKER
- DIRECTION OF TRAFFIC FLOW

STATE OF NORTH CAROLINA DEPT. OF TRANSPORTATION DIVISION OF HIGHWAYS RALEIGH, N.C.

1-18

ROADWAY STANDARD DRAWING FOR
OBJECT MARKERS
INSTALLATION

SHEET 1 OF 1
1264.02

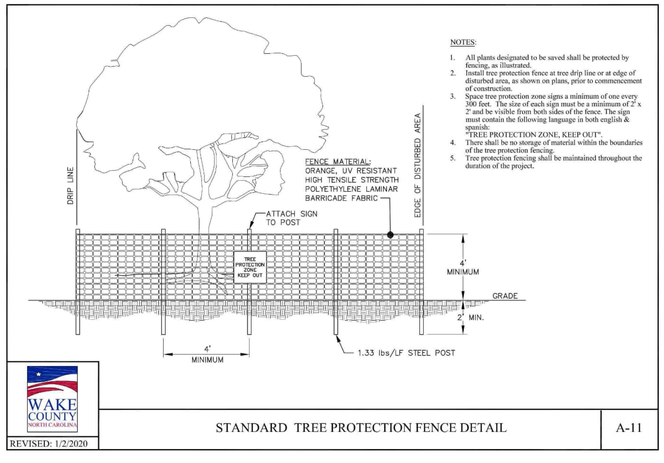

WAKE COUNTY NORTH CAROLINA

REVISED: 1/2/2020

STANDARD TREE PROTECTION FENCE DETAIL

A-11

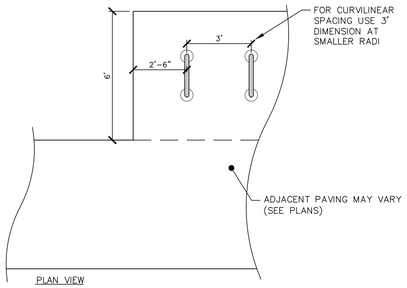

NOTES:
1. ANCHOR BIKE RACK TO CONCRETE. MOUNT PER MFR. RECOMMENDATIONS.
2. NOTIFY THE LANDSCAPE ARCHITECT OF ANY DISCREPANCIES BETWEEN PAVING TYPE AND BIKE RACK MOUNTING METHOD

BIKE RACK

SCALE: 1/4"=1'-0"

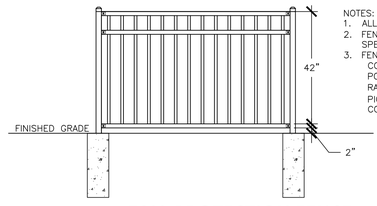

NOTES:
1. ALL FASTENERS AND HARDWARE SHALL BE S.S.
2. FENCE TO BE INSTALLED PER MANUFACTURER'S SPECIFICATIONS.
3. FENCE DIMENSIONS (OR EQUAL)
COMMERCIAL STRENGTH ALUMINUM
POSTS: 2" X 2"
RAILS: 1" X 1" – NO EXPOSED SCREW SYSTEM
PICKETS: ⅝" X 5/8" W/ 3 1⅜6" SPACING
COLOR: BLACK

FALL PROTECTION FENCE

SCALE: N. T. S

FINAL DRAWING - NOT RELEASED FOR CONSTRUCTION

McADAMS
The John R. McAdams Company, Inc.
2905 Meridian Parkway
Durham, NC 27713

phone 919. 361. 5000
fax 919. 361. 2269
license number: C-0293, C-187

www.mcadamsco.com

CLIENT

ALLIANCE GROUP OF NC, LLC
7208 FALLS OF NEUSE RD, SUITE 101
RALEIGH, NORTH CAROLINA 27615
CONTACT: JACOB ANDERSON
PHONE: 919. 239. 9486

AGNC BROKERAGE | CONSULTING | PLANNING

PEARCE FARM - PHASES 1-3
CONSTRUCTION DRAWINGS - PACKAGE 1

BURLINGTON MILLS ROAD
TOWN OF ROLESVILLE, NORTH CAROLINA

CID-24-08

NORTH CAROLINA PROFESSIONAL ENGINEER SEAL 22630 WILLIAM T. O'DANIEL — NOT FOR CONSTRUCTION

REVISIONS

NO.	DATE	
1	02. 03. 2025	REVISED PER TOWN, CITY AND COUNTY COMMENTS

PLAN INFORMATION

PROJECT NO.	AGN23001
FILENAME	AGN23001-D1
CHECKED BY	.
DRAWN BY	.
SCALE	N.T.S.
DATE	12. 02. 2024

SHEET

SITE DETAILS

C8.00

X:\Projects\AGN\AGN23001\04-Production\Engineering\Construction Drawings\Current Drawings\AGN23001-D1.dwg, 1/28/2025 1:06:55 PM, Sherrill Williams

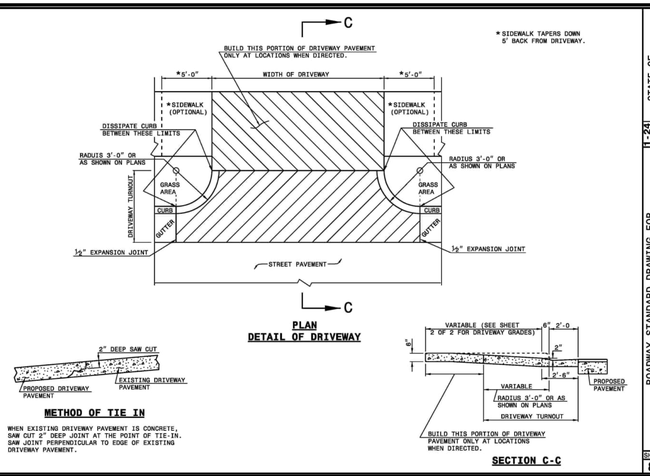

STATE OF NORTH CAROLINA
DEPT. OF TRANSPORTATION
DIVISION OF HIGHWAYS
RALEIGH, N.C.

1-24

ROADWAY STANDARD DRAWING FOR
DRIVEWAY TURNOUT
RADIUS TYPE

SHEET 1 OF 2
848.02

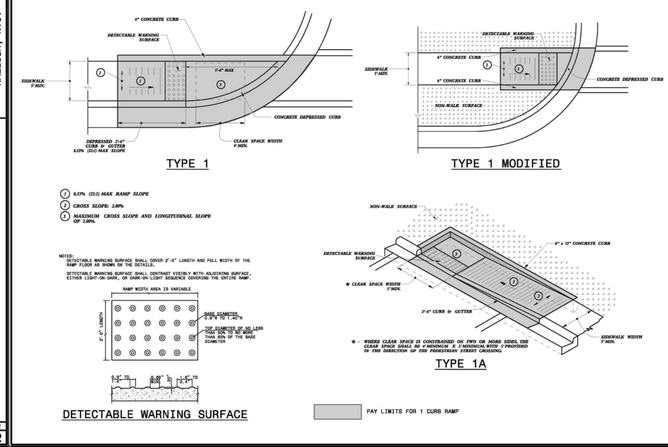

STATE OF NORTH CAROLINA
DEPT. OF TRANSPORTATION
DIVISION OF HIGHWAYS
RALEIGH, N.C.

1-24

ROADWAY STANDARD DRAWING FOR
CURB RAMP
DIRECTIONAL RAMP

SHEET 6 OF 13
848.06

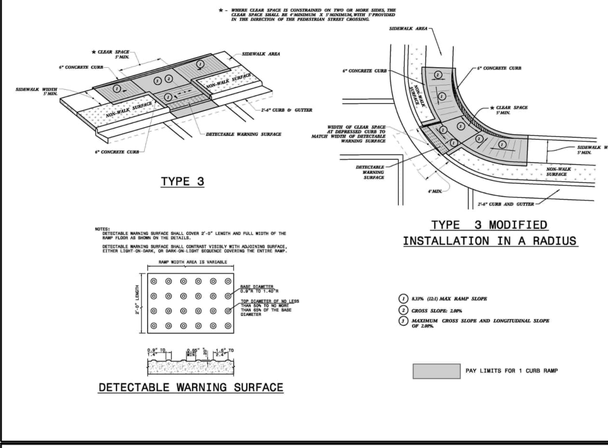

STATE OF NORTH CAROLINA
DEPT. OF TRANSPORTATION
DIVISION OF HIGHWAYS
RALEIGH, N.C.

1-24

ROADWAY STANDARD DRAWING FOR
CURB RAMP
PARALLEL RAMP

SHEET 9 OF 13
848.06

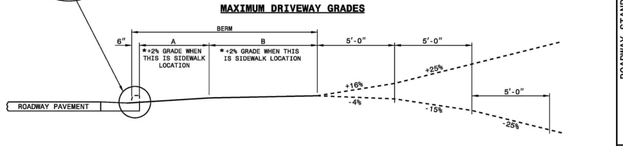

DESIRABLE OR MAXIMUM DRIVEWAY GRADES				
BERM WIDTH	A		B	
	DIST.	GRADE	DIST.	GRADE
8' OR LESS	5'-0"	+2%*	2'-6"	+5%
8' OR LESS	2'-0"	+6%	5'-6"	+2%*
10'	4'-0"	+4%	5'-6"	+2%*
12' & OVER	4'-6"	+4%	7'-0"	+2%*

STATE OF NORTH CAROLINA
DEPT. OF TRANSPORTATION
DIVISION OF HIGHWAYS
RALEIGH, N.C.

1-24

ROADWAY STANDARD DRAWING FOR
DRIVEWAY TURNOUT
DRIVEWAY GRADES

SHEET 2 OF 2
848.02

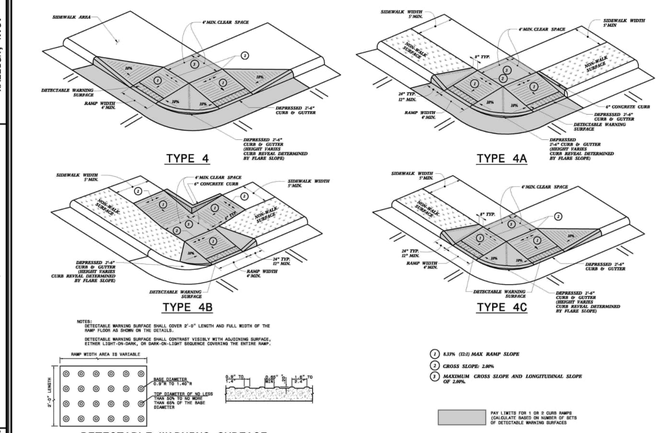

STATE OF NORTH CAROLINA
DEPT. OF TRANSPORTATION
DIVISION OF HIGHWAYS
RALEIGH, N.C.

1-24

ROADWAY STANDARD DRAWING FOR
CURB RAMP
SHARED LANDING

SHEET 10 OF 13
848.06

NOTES:

1. CONSTRUCT THE RAMP SURFACE TO BE STABLE, FIRM, AND SLIP RESISTANT. CONSTRUCT THE CURB RAMP TYPE AS SHOWN IN THE PAVEMENT MARKING PLANS OR AS DIRECTED BY THE ENGINEER.
2. LOCATE CURB RAMPS AND PLACE PEDESTRIAN CROSSWALK MARKINGS AS SHOWN IN THE PAVEMENT MARKING PLANS. WHEN FIELD ADJUSTMENTS REQUIRE MOVING CURB RAMPS OR MARKINGS AS SHOWN, CONTACT THE SIGNING AND DELINEATION UNIT OR LOCATE AS DIRECTED BY THE ENGINEER.
3. COORDINATE THE CURB RAMP AND THE PEDESTRIAN CROSSWALK MARKINGS SO A 4'x4' CLEAR SPACE AT THE BASE OF THE CURB RAMP WILL FALL WITHIN THE PEDESTRIAN CROSSWALK LINES.
4. SET BACK DISTANCE FROM INSIDE CROSSWALK MARKING TO NEAREST EDGE OF TRAVEL LANE IS 4' MINIMUM.
5. REFER TO THE PAVEMENT MARKING PLANS FOR STOP BAR LOCATIONS AT SIGNALIZED INTERSECTIONS. IF A PAVEMENT MARKING PLAN IS NOT PROVIDED, CONTACT THE SIGNAL DESIGN SECTION FOR THE STOP BAR LOCATIONS OR LOCATE AS DIRECTED BY THE ENGINEER.
6. TERMINATE PARKING A MINIMUM OF 20' FROM THE BACK OF PEDESTRIAN CROSSWALK.
7. CONSTRUCT CURB RAMPS A MINIMUM OF 4' WIDE.
8. CONSTRUCT THE RUNNING SLOPE OF THE RAMP 8.33% MAXIMUM.
9. ALLOWABLE CROSS SLOPE ON SIDEWALKS AND CURB RAMPS WILL BE 2% MAXIMUM.
10. CONSTRUCT THE SIDE FLARE SLOPE A MAXIMUM OF 10% MEASURED ALONG THE CURB LINE.
11. CONSTRUCT THE COUNTER SLOPE OF THE GUTTER OR STREET AT THE BASE OF THE CURB RAMP A MAXIMUM OF 5% AND MAINTAIN A SMOOTH TRANSITION.
12. CONSTRUCT CLEAR SPACES FOR SIDEWALK A MINIMUM OF 4'x4' WITH A MAXIMUM SLOPE OF 2% IN ANY DIRECTION. CONSTRUCT CLEAR SPACES FOR MEDIAN ISLANDS A MINIMUM OF 5'x5' WITH A MAXIMUM SLOPE OF 2% IN ANY DIRECTION. IF CONSTRAINED ON TWO OR MORE SIDES, THE THE CLEAR SPACE SHALL BE 4' MINIMUM X 5' MINIMUM, WITH 5' PROVIDED IN THE DIRECTION OF THE PEDESTRIAN STREET CROSSING.
13. TO USE A MEDIAN ISLAND AS A PEDESTRIAN REFUGE AREA, MEDIAN ISLANDS WILL BE A MINIMUM OF 6' WIDE. CONSTRUCT MEDIAN ISLANDS TO PROVIDE PASSAGE OVER OR THROUGH THE ISLAND.
14. SMALL CHANNELIZATION ISLANDS THAT CAN NOT PROVIDE A 5'X5' CLEAR SPACE AT THE TOP OF RAMPS, WILL BE CUT THROUGH LEVEL WITH THE SURFACE STREET.
15. CURB RAMPS WITH RETURNED CURBS MAY BE USED ONLY WHERE PEDESTRIANS WOULD NOT NORMALLY WALK ACROSS THE RAMP, WHERE THE ADJACENT SURFACE IS PLANTING OR OTHER NON-WALKING SURFACE, OR THE SIDE APPROACH IS SUBSTANTIALLY OBSTRUCTED.
16. PLACE A ½" EXPANSION JOINT WHERE THE CONCRETE CURB RAMP JOINS THE CURB AS SHOWN IN ROADWAY STANDARD DRAWING 848.01.
17. PLACE ALL PEDESTRIAN PUSH BUTTON ACTUATORS AND CROSSING SIGNALS AS SHOWN IN THE PLANS OR AS SHOWN IN THE MUTCD.
18. DETECTABLE WARNING SURFACES WILL COVER 2'-0" LENGTH AND FULL WIDTH OF THE RAMP FLOOR AS SHOWN ON THE DETAILS.
19. DETECTABLE WARNING SURFACES WILL CONTRAST VISIBLY WITH ADJOINING SURFACE, EITHER LIGHT-ON-DARK, OR DARK-ON-LIGHT SEQUENCE COVERING THE ENTIRE RAMP.

STATE OF NORTH CAROLINA
DEPT. OF TRANSPORTATION
DIVISION OF HIGHWAYS
RALEIGH, N.C.

1-24

ROADWAY STANDARD DRAWING FOR
CURB RAMP
NOTES

SHEET 13 OF 13
848.06

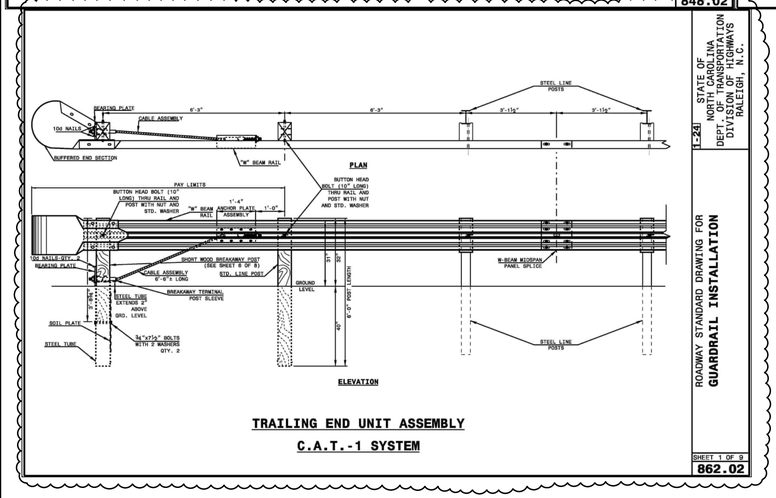

STATE OF NORTH CAROLINA
DEPT. OF TRANSPORTATION
DIVISION OF HIGHWAYS
RALEIGH, N.C.

1-24

ROADWAY STANDARD DRAWING FOR
GUARDRAIL INSTALLATION

SHEET 1 OF 9
862.02

McADAMS
The John R. McAdams Company, Inc.
2905 Meridian Parkway
Durham, NC 27713

phone 919. 361. 5000
fax 919. 361. 2269
license number: C-0293, C-187

www.mcadamsco.com

CLIENT

ALLIANCE GROUP OF NC, LLC
7208 FALLS OF NEUSE RD, SUITE 101
RALEIGH, NORTH CAROLINA 27615
CONTACT: JACOB ANDERSON
PHONE: 919. 239. 9486

AGNC BROKERAGE | CONSULTING | PLANNING

PEARCE FARM - PHASES 1-3
CONSTRUCTION DRAWINGS - PACKAGE 1
BURLINGTON MILLS ROAD
TOWN OF ROLESVILLE, NORTH CAROLINA

CID-24-08

REVISIONS

NO.	DATE	
1	02. 03. 2025	REVISED PER TOWN, CITY AND COUNTY COMMENTS

PLAN INFORMATION

PROJECT NO.	AGN23001
FILENAME	AGN23001-D1
CHECKED BY	.
DRAWN BY	.
SCALE	N.T.S.
DATE	12. 02. 2024

SHEET

SITE DETAILS

C8.01

X:\Projects\AGN\AGN23001\04-Production\Engineering\Construction Drawing\Current Drawing\AGN23001-D1.dwg, 1/28/2025 1:07:14 PM, Sherrill Williams

FINAL DRAWING - NOT RELEASED FOR CONSTRUCTION

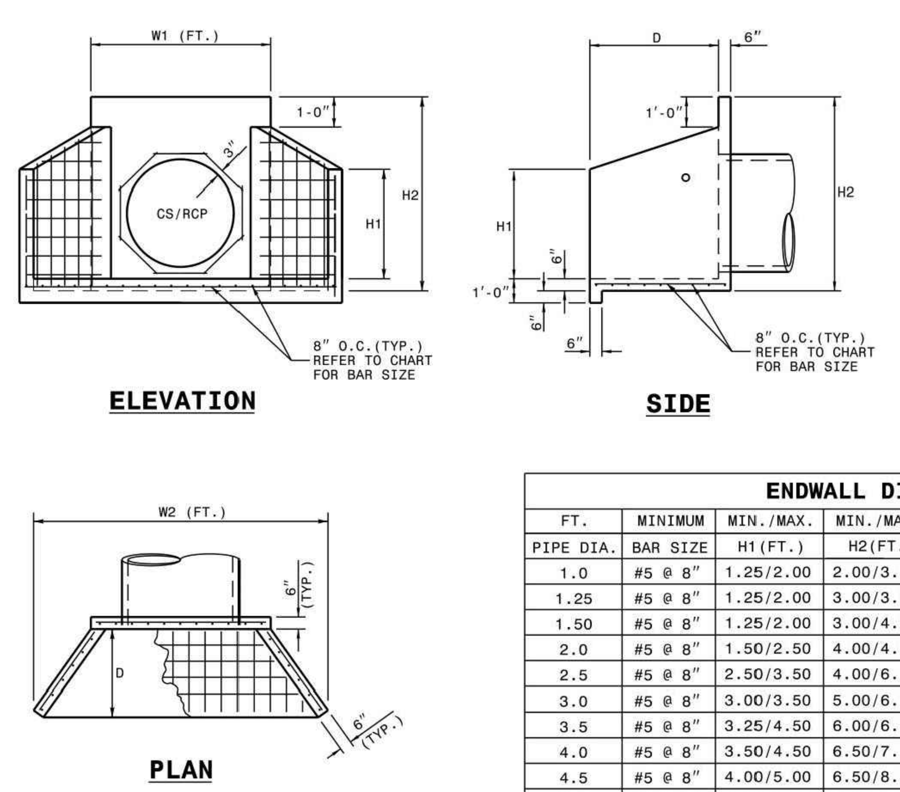

NOTES:

- * THIS PRECAST ENDWALL MAY BE USED FOR THE FOLLOWING STANDARDS: 838.01, 838.11, 838.21, 838.27, 838.33, 838.39, 838.51, 838.57, 838.63 AND 838.69.
- * INSTALL PRECAST ENDWALLS WITH WINGS AND PAY FOR IN ACCORDANCE WITH SPECIFICATION SECTION 838.
- * USE 4000 PSI CONCRETE.
- * PROVIDE ALL REINFORCING STEEL WHICH MEETS ASTM A615 FOR GRADE 60 AND WELDED WIRE FABRIC CONFORMING TO ASTM A185 WITH 2" MIN. CLEARANCE.
- * PLACE LIFT HOLES OR PINS IN ACCORDANCE WITH OSHA STANDARD 1926.704.
- * PIPE TO BE GROUTED INTO HEADWALL AT JOB SITE BY CONTRACTOR
- * ALL ELEMENTS PRECAST TO MEET ASTM C913.
- * WELDED WIRE FABRIC MAY BE SUBSTITUTED FOR REBAR AS LONG AS THE SAME AREA OF STEEL IS PROVIDED.
- * CHAMFER ALL CORNERS 1" OR HAVE A RADIUS OF 1".

NOTE: THE MINIMUM BAR SIZE SHALL BE #5 BARS AT 8" CTS. THE CONTRACTOR WILL HAVE THE OPTION TO INCREASE THIS BAR SIZE AS NEEDED.

ENDWALL DIMENSIONS

FT. PIPE DIA.	MINIMUM BAR SIZE	MIN./MAX. H1 (FT.)	MIN./MAX. H2 (FT.)	MIN./MAX. D (FT.)	MIN./MAX. W1	MIN./MAX. W2
1.0	#5 @ 8"	1.25/2.00	2.00/3.75	1.25/1.75	3.00/3.75	5.50/6.00
1.25	#5 @ 8"	1.25/2.00	3.00/3.75	1.25/2.00	3.50/3.75	6.50/6.75
1.50	#5 @ 8"	1.25/2.00	3.00/4.25	1.50/2.50	3.50/3.75	6.50/6.75
2.0	#5 @ 8"	1.50/2.50	4.00/4.75	1.75/2.50	4.00/4.25	7.50/8.25
2.5	#5 @ 8"	2.50/3.50	4.00/6.00	2.00/3.00	4.50/5.50	10.00/11.50
3.0	#5 @ 8"	3.00/3.50	5.00/6.00	2.75/3.50	5.25/5.75	11.50/11.75
3.5	#5 @ 8"	3.25/4.50	6.00/6.75	3.25/3.50	6.00/6.75	12.00/13.25
4.0	#5 @ 8"	3.50/4.50	6.50/7.00	3.25/3.50	6.50/6.75	13.00/13.25
4.5	#5 @ 8"	4.00/5.00	6.50/8.50	3.25/4.00	7.00/9.25	13.50/15.75
5.0	#5 @ 8"	4.50/5.00	7.00/8.50	3.25/4.00	7.25/9.25	13.75/15.75
5.5	#5 @ 8"	4.50/5.00	7.50/8.50	3.25/4.00	7.25/9.25	14.00/15.75
6.0	#5 @ 8"	4.50/5.00	7.50/8.50	3.25/4.00	7.75/9.25	14.75/16.75

1-18 STATE OF NORTH CAROLINA DEPT. OF TRANSPORTATION DIVISION OF HIGHWAYS RALEIGH, N.C.

ROADWAY STANDARD DRAWING FOR **PRECAST CONCRETE ENDWALL** FOR SINGLE 12" THRU 72" PIPE - 90° SKEW

SHEET 1 OF 1 **838.80**

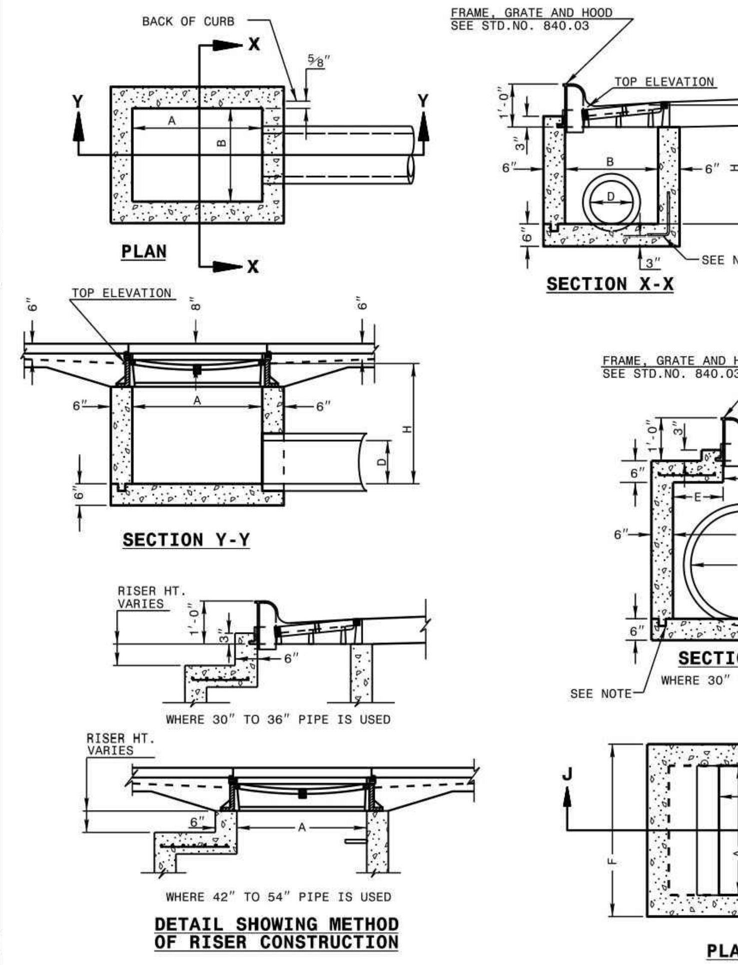

GENERAL NOTES:

USE CLASS "B" CONCRETE THROUGHOUT.

PROVIDE ALL CATCH BASINS OVER 3'-6" IN DEPTH WITH STEPS 12" ON CENTER. USE STEPS WHICH COMPLY WITH STD. DRAWING 840.66.

OPTIONAL CONSTRUCTION - MONOLITHIC POUR, 2" KEYWAY, OR #4 BAR DOWELS AT 12" CENTERS AS DIRECTED BY THE ENGINEER.

USE FORMS FOR THE CONSTRUCTION OF THE BOTTOM SLAB.

IF REINFORCED CONCRETE PIPE IS SET IN BOTTOM SLAB OF BOX, ADD TO SLAB AS SHOWN ON STD. NO. 840.00.

USE TYPE "E", "F" AND "G" GRATES UNLESS OTHERWISE INDICATED.

FOR 8'-0" IN HEIGHT OR LESS USE 6" WALLS AND BOTTOM SLAB. OVER 8'-0" TO 16'-0" IN HEIGHT USE 8" WALLS AND BOTTOM SLAB. ADJUST QUANTITIES ACCORDINGLY.

CONSTRUCT WITH PIPE CROWNS MATCHING.

CHAMFER ALL EXPOSED CORNERS 1".

DRAWING NOT TO SCALE.

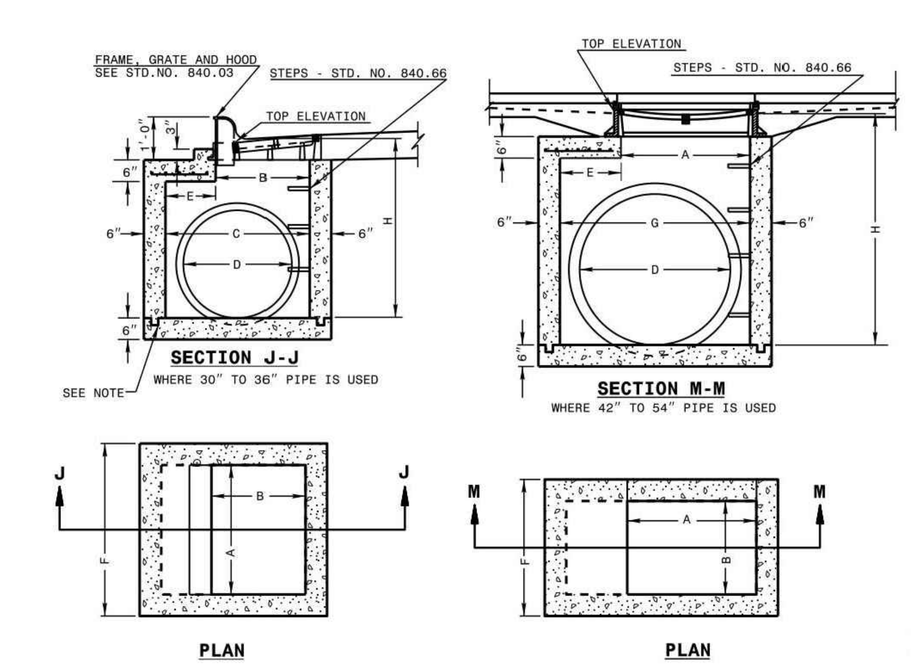

1-18 STATE OF NORTH CAROLINA DEPT. OF TRANSPORTATION DIVISION OF HIGHWAYS RALEIGH, N.C.

ROADWAY STANDARD DRAWING FOR **CONCRETE CATCH BASIN** 12" THRU 54" PIPE

SHEET 1 OF 2 **840.02**

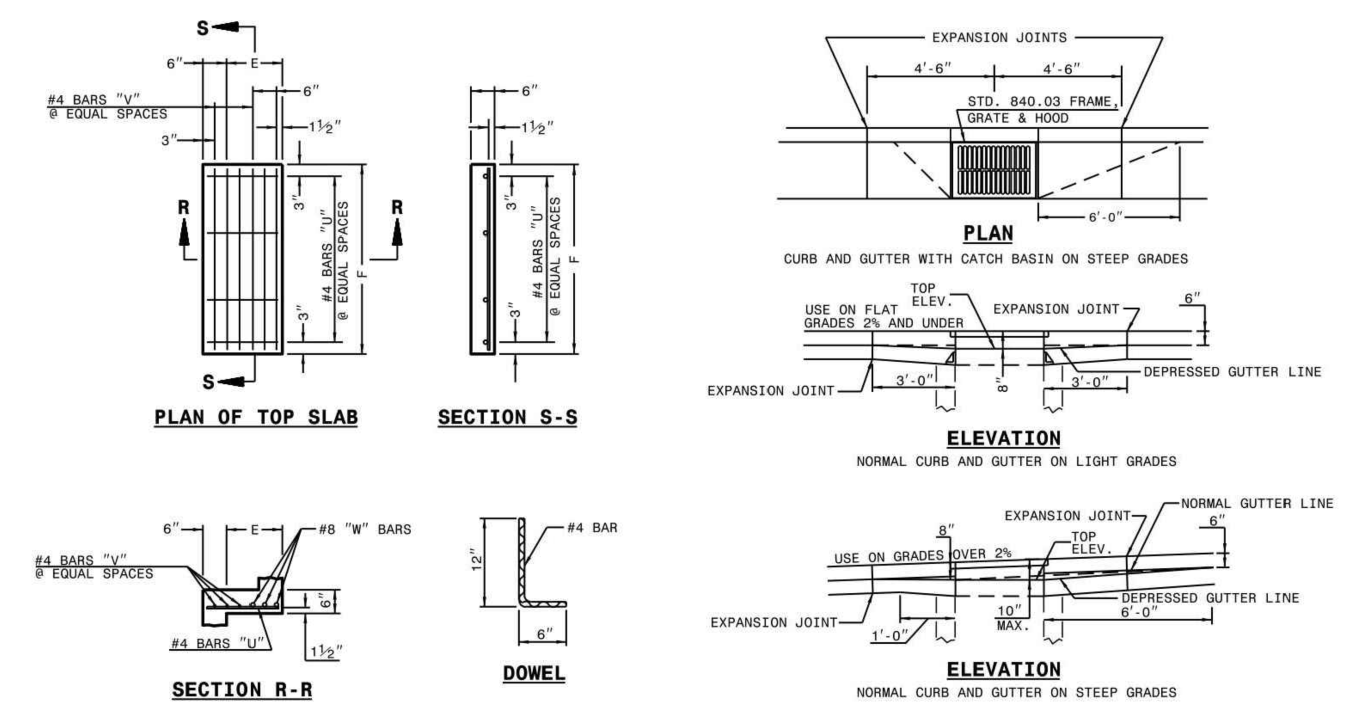

MINIMUM DIMENSIONS AND QUANTITIES FOR CONCRETE CATCH BASIN(BASED ON MIN. HEIGHT, H, WITH NO RISER) *

DIMENSIONS OF BOX AND PIPE						COVER DIMENSION		BARS-U		BARS-V		BARS-W			CU.YDS. CONC. IN BOX			DEDUCTIONS ONE PIPE	
PIPE D	SPAN A	WIDTH B	WIDTH C	SPAN G	MIN. HEIGHT H	E	F	NO.	LENGTH	NO.	LENGTH	NO.	LENGTH	TOTAL LBS.	TOP SLAB	BOTTOM SLAB	TOT. CONC. FOR MINIMUM HEIGHT, H	C.M.	R.C.
12"	3'-0"	2'-2"	--	--	2'-9"	--	--	--	--	--	--	--	--	--	--	0.235	0.772	0.015	0.026
15"	3'-0"	2'-2"			3'-0"											0.235	0.829	0.023	0.036
18"	3'-0"	2'-2"			3'-3"											0.235	0.887	0.033	0.049
24"	3'-0"	2'-2"			3'-9"											0.235	1.001	0.059	0.085
30"	3'-0"	2'-2"	3'-4"		4'-3"	1'-2"	4'-0"	4	1'-5"	2	3'-9"	3	3'-9"	39	0.123	0.321	1.433	0.092	0.127
36"	3'-0"	2'-2"	3'-10"		4'-9"	1'-8"	4'-0"	4	1'-11"	3	3'-9"	3	3'-9"	43	0.161	0.358	1.714	0.132	0.178
42"	3'-0"	2'-2"		4'-5"	5'-3"	1'-5"	3'-2"	4	1'-8"	2	2'-11"	3	2'-11"	32	0.112	0.318	1.738	0.180	0.243
48"	3'-0"	2'-2"		5'-0"	5'-9"	2'-0"	3'-2"	4	2'-3"	3	2'-11"	3	2'-11"	35	0.145	0.352	2.052	0.235	0.317
54"	3'-0"	2'-2"		5'-7"	6'-3"	2'-7"	3'-2"	4	2'-10"	5	2'-11"	3	2'-11"	41	0.180	0.386	2.387	0.297	0.401

* RISER HAS .228 CUBIC YARDS OF CONCRETE PER FOOT HEIGHT

1-18 STATE OF NORTH CAROLINA DEPT. OF TRANSPORTATION DIVISION OF HIGHWAYS RALEIGH, N.C.

ROADWAY STANDARD DRAWING FOR **CONCRETE CATCH BASIN** 12" THRU 54" PIPE

SHEET 2 OF 2 **840.02**

NOTE: USE TYPE "E", "F" AND "G" GRATE UNLESS OTHERWISE NOTED.

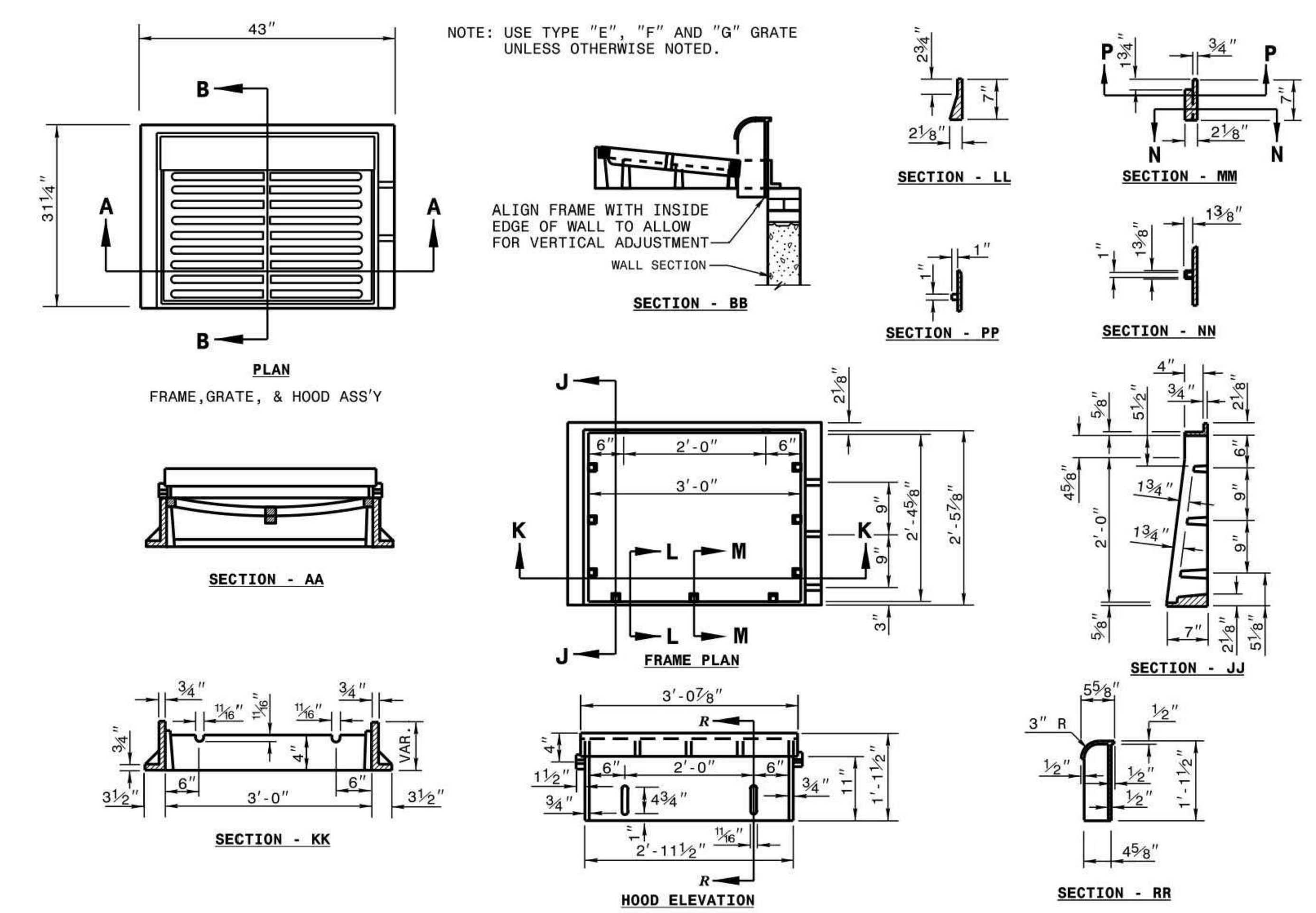

1-18 STATE OF NORTH CAROLINA DEPT. OF TRANSPORTATION DIVISION OF HIGHWAYS RALEIGH, N.C.

ROADWAY STANDARD DRAWING FOR **FRAME, GRATES, AND HOOD** FOR USE ON STANDARD CATCH BASIN

SHEET 1 OF 2 **840.03**

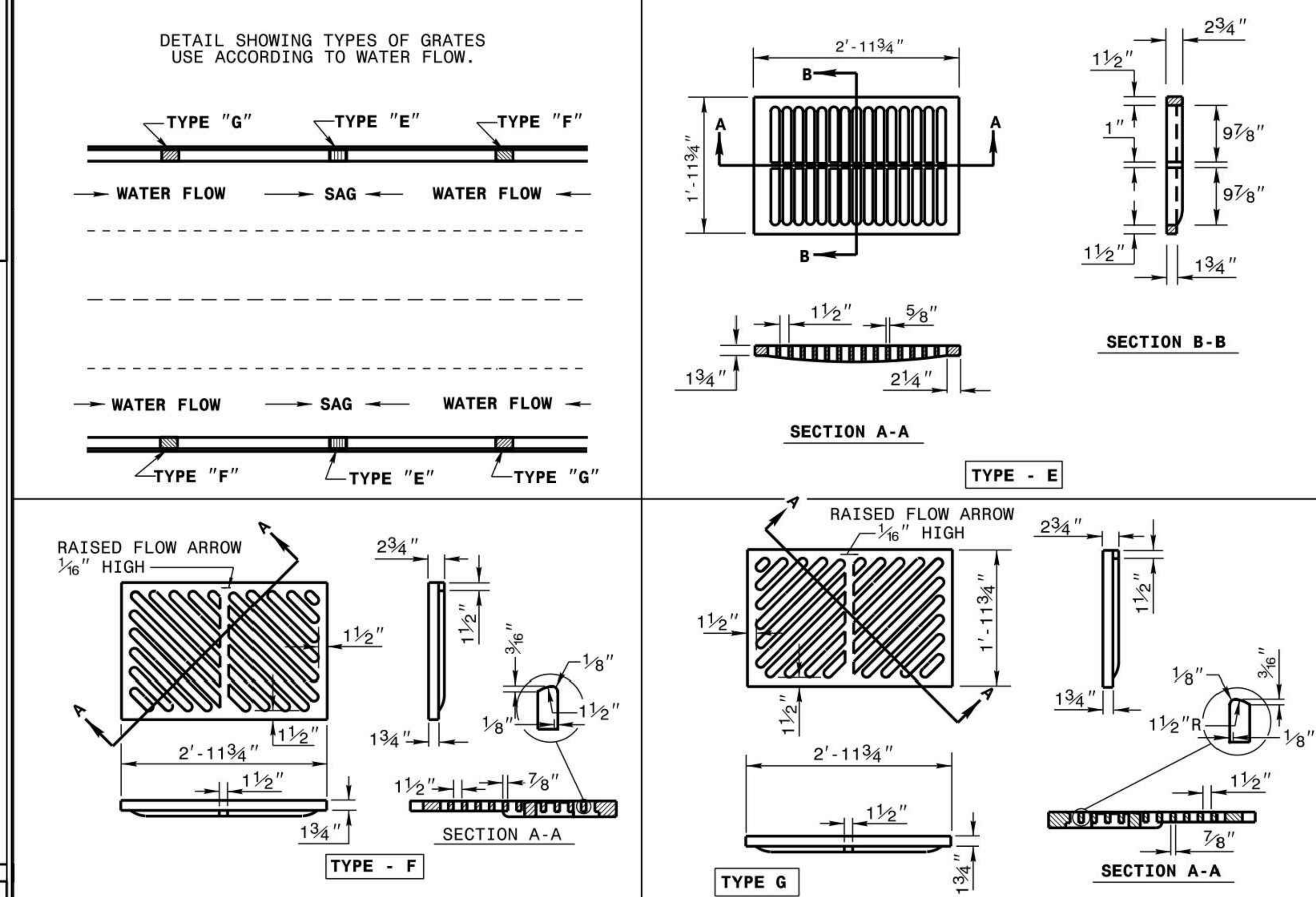

1-18 STATE OF NORTH CAROLINA DEPT. OF TRANSPORTATION DIVISION OF HIGHWAYS RALEIGH, N.C.

ROADWAY STANDARD DRAWING FOR **FRAME, GRATES, AND HOOD** FOR USE ON STANDARD CATCH BASIN

SHEET 2 OF 2 **840.03**

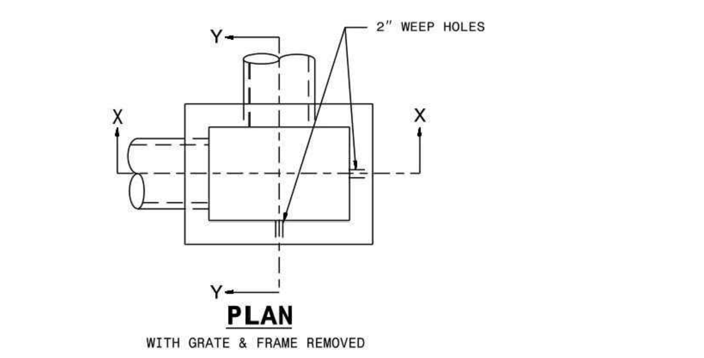

GENERAL NOTES:

USE CLASS "B" CONCRETE THROUGHOUT.

PROVIDE ALL DROP INLETS OVER 3'-6" IN DEPTH WITH STEPS 12" ON CENTER. USE STEPS WHICH COMPLY WITH STD. DRAWING 840.66.

OPTIONAL CONSTRUCTION - MONOLITHIC POUR 2" KEYWAY OR #4 BAR DOWELS AT 12" CENTERS AS DIRECTED BY THE ENGINEER.

USE FORMS FOR THE CONSTRUCTION OF THE BOTTOM SLAB.

IF REINFORCED CONCRETE PIPE IS SET IN BOTTOM SLAB OF BOX, ADD TO SLAB AS SHOWN ON STD. NO. 840.00.

CONSTRUCT WITH PIPE CROWNS MATCHING.

SEE STANDARD DRAWING 840.25 FOR ATTACHMENT OF FRAMES AND GRATES NOT SHOWN.

INSTALL 2" WEEPHOLES AS DIRECTED BY THE ENGINEER.

INSTALL STONE DRAINS, OF A MINIMUM OF 1 CUBIC FOOT OF NO. 78M STONE IN A POROUS FABRIC BAG OR WRAP, AT EACH WEEP HOLE OR AS DIRECTED BY THE ENGINEER.

CHAMFER ALL EXPOSED CORNERS 1".

DRAWING NOT TO SCALE.

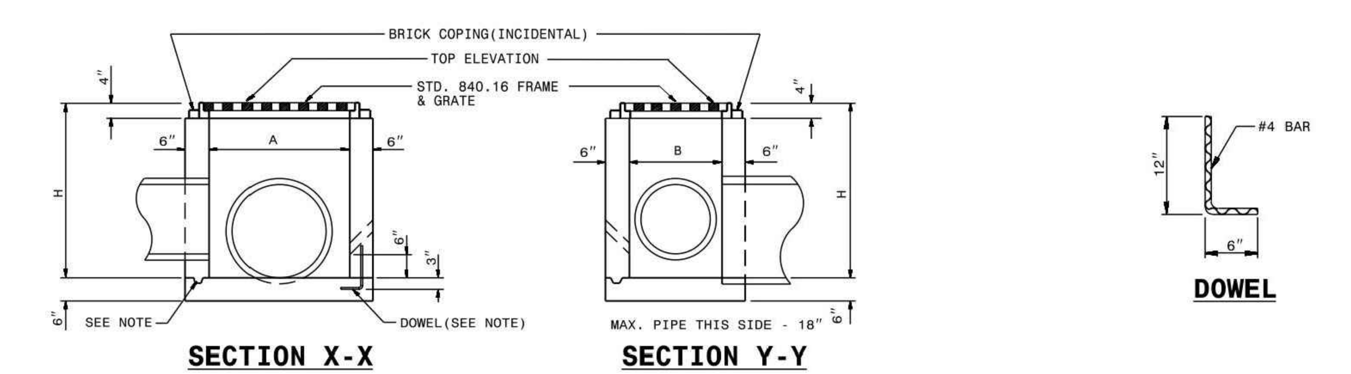

DIMENSIONS AND QUANTITIES FOR DROP INLET(BASED ON MIN. HEIGHT, H)

DIMENSIONS OF BOX & PIPE				CUBIC YARDS CONC. IN BOX			DEDUCTIONS FOR ONE PIPE	
PIPE D	SPAN A	WIDTH B	MIN. HEIGHT H	BOTTOM SLAB	WALL PER FT. HT.	TOTAL CONCRETE FOR MINIMUM HEIGHT, H	C.M.	R.C.
12"	3'-0"	2'-0"	2'-0"	0.222	0.222	0.592	0.015	0.026
15"	/	/	2'-3"	/	/	0.648	0.023	0.036
18"			2'-6"			0.703	0.033	0.049
24"			3'-0"			0.814	0.059	0.085
30"	3'-0"	2'-0"	3'-6"	0.222	0.222	0.925	0.092	0.127

1-18 STATE OF NORTH CAROLINA DEPT. OF TRANSPORTATION DIVISION OF HIGHWAYS RALEIGH, N.C.

ROADWAY STANDARD DRAWING FOR **CONCRETE DROP INLET** 12" THRU 30" PIPE

SHEET 1 OF 1 **840.14**

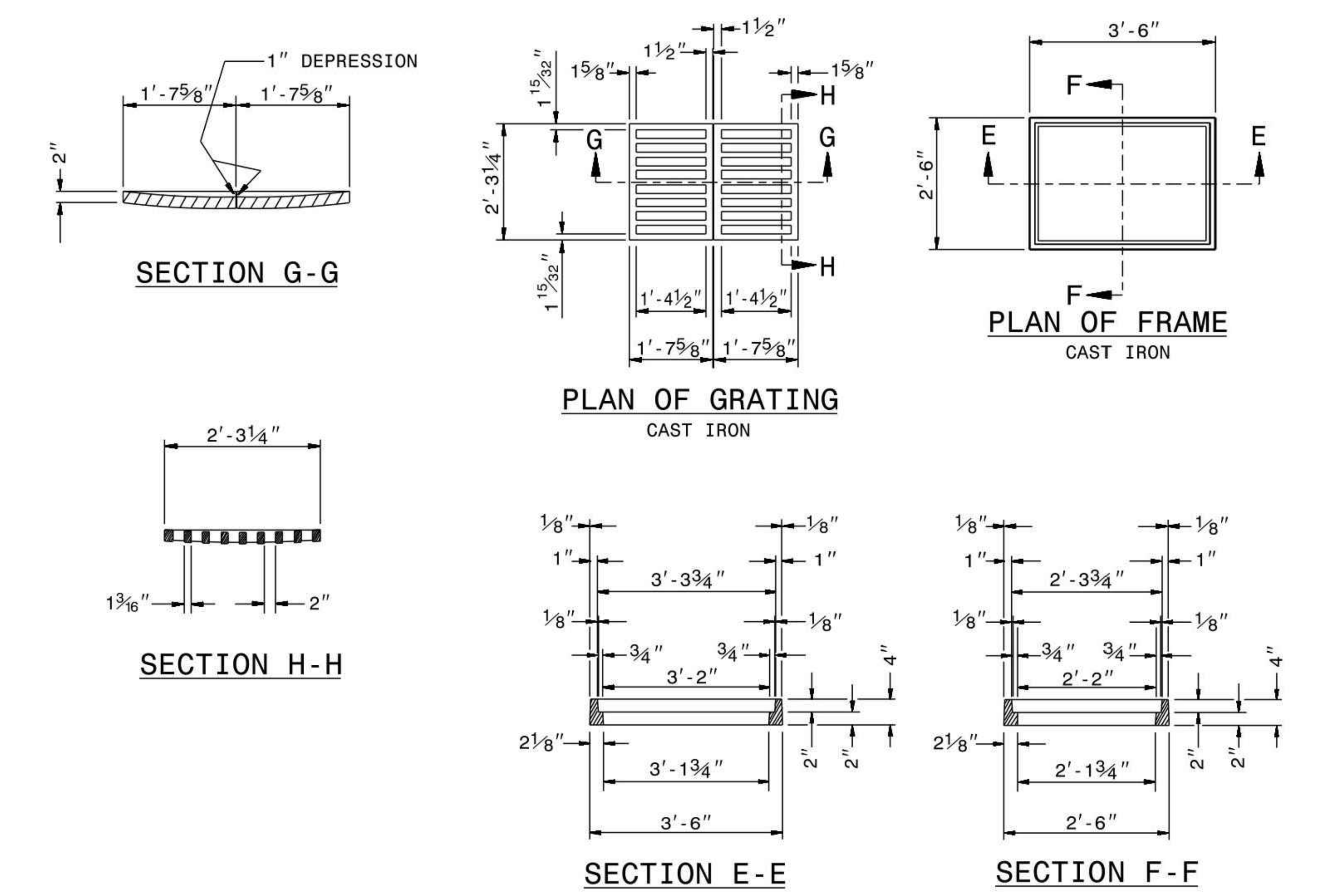

1-18 STATE OF NORTH CAROLINA DEPT. OF TRANSPORTATION DIVISION OF HIGHWAYS RALEIGH, N.C.

ROADWAY STANDARD DRAWING FOR **DROP INLET FRAME AND GRATES** FOR USE WITH STD. DWG.S 840.14 AND 840.15

SHEET 1 OF 1 **840.16**

MCADAMS
The John R. McAdams Company, Inc.
2905 Meridian Parkway
Durham, NC 27713

phone 919. 361. 5000
fax 919. 361. 2269
license number: C-0293, C-187

www.mcadamsco.com

CLIENT

ALLIANCE GROUP OF NC, LLC
7208 FALLS OF NEUSE RD, SUITE 101
RALEIGH, NORTH CAROLINA 27615
CONTACT: JACOB ANDERSON
PHONE: 919. 239. 9486

AGNC BROKERAGE | CONSULTING | PLANNING

PEARCE FARM - PHASES 1-3
CONSTRUCTION DRAWINGS - PACKAGE 1
BURLINGTON MILLS ROAD
TOWN OF ROLESVILLE, NORTH CAROLINA

CID-24-08

NORTH CAROLINA PROFESSIONAL SEAL 22630 ENGINEER WILLIAM T. O'DANIEL
PRELIMINARY NOT FOR CONSTRUCTION

REVISIONS

NO.	DATE	
1	02. 03. 2025	REVISED PER TOWN, CITY AND COUNTY COMMENTS

PLAN INFORMATION

PROJECT NO.	AGN23001
FILENAME	AGN23001-D1
CHECKED BY	.
DRAWN BY	.
SCALE	N.T.S.
DATE	12. 02. 2024

SHEET

STORM DRAINAGE DETAILS

C8.02

FINAL DRAWING - NOT RELEASED FOR CONSTRUCTION

X:\Projects\AGN\AGN23001\04-Production\Engineering\Construction Drawings\Current Drawings\AGN23001-D1.dwg, 1/28/2025 1:07:48 PM, Sherrill Williams

H=	THE FILL HEIGHT MEASURED VERTICALLY AT ANY POINT ALONG THE PIPE FROM THE TOP OF THE EMBANKMENT AT THE POINT. DO NOT OPERATE HEAVY EQUIPMENT OVER ANY PIPE CULVERT UNTIL THE PIPE HAS BEEN PROPERLY BACKFILLED AND COVERED WITH AT LEAST 3 FEET OF APPROVED MATERIAL.
	UNDISTURBED EARTH MATERIAL
	BEDDING (MIDDLE AND OUTER): LOOSELY PLACED SELECT BACKFILL MATERIAL MEETING NCDOT CLASS II, TYPE 1 (WASHED OR UNWASHED CRUSHED STONE SCREENINGS) OR CLASS III, TYPE 1 (NCDOT 25 OR 2MS FINE AGGREGATE). LEAVE SECTION DIRECTLY BENEATH PIPE UNCOMPACTED AS PIPE SEATING AND BACKFILL WILL ACCOMPLISH COMPACTION.
	SELECT BACKFILL (BELOW SPRINGLINE): SELECT BACKFILL MATERIAL MEETING NCDOT CLASS II, TYPES 1 OR 2 OR NCDOT CLASS III, TYPES 1 OR 2
	BACKFILL: APPROVED SUITABLE LOCAL COMPACTABLE MATERIAL ABOVE SPRINGLINE OF PIPE MEETING LOCAL MUNICIPAL SPECIFICATIONS.
	ROCK FOUNDATION OR UNSUITABLE MATERIAL FOUNDATION: SELECT MATERIAL NCDOT CLASS V (#78M STONE) OR NCDOT CLASS VI (#57 STONE) FOR FOUNDATION CONDITIONING. ENCAPSULATE WITH ENGINEERING FABRIC AS DIRECTED BY THE ENGINEER: TYPE 4 SOIL STABILIZATION FABRIC (NCDOT TABLE 1056-1). OVERLAP ALL TRANSVERSE AND LONGITUDINAL JOINTS IN FABRIC AT LEAST 18 INCHES. MAINTAIN THE PIPE FOUNDATION IN A DRY CONDITION.

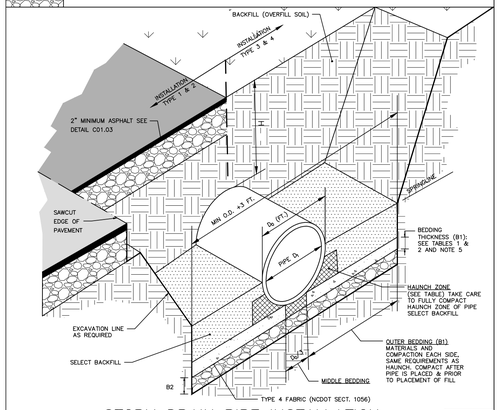

STORM DRAIN PIPE INSTALLATION

N.T.S.

TABLE 1
EQUIVALENT USCS[C] AND AASHTO SOIL CLASSIFICATION FOR SIDD[D] SOIL DESIGNATIONS

SIDD	USCS	NCDOT/AASHTO
GRAVELLY SAND (CATEGORY I)	SW, SP, GW, GP	–NCDOT CLASS II–TYPE 1 (CRUSHED STONE SCREENINGS), LL<30; PI≤6 –NCDOT CLASS III, TYPE 1 (2S OR 2MS), LL<30; PI≤6
SANDY SILT (CATEGORY II)	GM, SM, ALSO GC, SC WITH LESS THAN 20% PASSING #200 SIEVE	–NCDOT CLASS II TYPE 1 (CRUSHED STONE SCREENINGS) AND CLASS II, TYPE 2 (AASHTO M145 FOR A–2–4 WITH MAX PI OF 6, A–4 W/ MAX 45% PASSING #200 SIEVE AND A MAX PI OF 6) –NCDOT CLASS III, TYPE 1 (2S OR 2MS) OR CLASS III, TYPE 2 (AASHTO M145 FOR SOIL CLASSIFICATION A–1 OR A–3)
SILTY CLAY (CATEGORY III)	CL, MH, GC, SC	A5, A6

[C] UNIFOLD SOIL CLASSIFICATION SYSTEM
[D] STANDARD INSTALLATIONS DIRECT DESIGN

TABLE 2
STANDARD INSTALLATIONS SOILS AND MINIMUM COMPACTION REQUIREMENTS

INSTALLATION TYPE	BEDDING THICKNESS	OUTER BEDDING (B1) NOTE 5 (% COMPACTION/CATEGORY)	HAUNCH ZONE & SELECT BACKFILL AREA (% COMPACTION/CATEGORY)	LOCATION
TYPE 1	B1 = Do/6 (6" MIN) B2=IF ROCK FOUNDATION OR OVER UNSUITABLE FOUNDATION, 3" /FT OF 'H', 12" MIN/24" MAX	95% CATEGORY 1	90% CATEGORY 1 95% CATEGORY II	PAVED AREAS WITH 2' OR LESS BURY
TYPE 2	B1 = Do/8 (6" MIN) B2=IF ROCK FOUNDATION OR OVER UNSUITABLE FOUNDATION, 3" /FT OF 'H', 12" MIN/24" MAX	90% CATEGORY 1	85% CATEGORY 1 90% CATEGORY II	PAVED AREAS WITH GREATER THAN 2' OF BURY
TYPE 3	B1 = Do/6 (6" MIN) B2=IF ROCK FOUNDATION OR OVER UNSUITABLE FOUNDATION, 3" /FT OF 'H', 12" MIN/24" MAX	85% CATEGORY 1 90% CATEGORY II	90% CATEGORY 1 90% CATEGORY II OR 95% CATEGORY III	IN R/W OUTSIDE OF PAVEMENT
TYPE 4	B1 = Do/6 (6" MIN) B2=IF ROCK FOUNDATION OR OVER UNSUITABLE FOUNDATION, 3" /FT OF 'H', 12" MIN/24" MAX	NO COMPACTION REQUIRED, EXCEPT IF CATEGORY III, USE 85% CATEGORY III	NO COMPACTION REQUIRED, EXCEPT IF CATEGORY III, USE 85% CATEGORY III	NATURAL AREAS

NOTES:
1. COMPACTION AND SOIL SYMBOLS – I.E. "95% CATEGORY I" – REFERS TO CATEGORY I SOIL MATERIAL WITH MINIMUM STANDARD PROCTOR COMPACTION OF 95%.
2. SOIL IN THE OUTER BEDDING, HAUNCH, AND LOWER SIDE ZONES, EXCEPT UNDER THE MIDDLE ⅓ OF THE PIPE, SHALL BE COMPACTED TO AT LEAST THE SAME COMPACTION AS THE MAJORITY OF THE SOIL IN THE OVERFILL (BACKFILL) ZONE.
3. FOR TRENCHES, THE TOP ELEVATION SHALL BE NO LOWER THAN 0.1H BELOW FINISHED GRADE OR, FOR ROADWAYS, ITS TOP SHALL BE NO LOWER THAN AN ELEVATION OF 1–FOOT BELOW THE BOTTOM OF THE PAVEMENT BASE MATERIAL.
4. FOR TRENCHES, THE WIDTH SHALL BE WIDER THAN SHOWN IF REQUIRED FOR ADEQUATE SPACE TO ATTAIN THE SPECIFIED COMPACTION IN THE HAUNCH AND BEDDING ZONES.
5. COMPACT OUTER BEDDING AFTER PIPE IS PLACED AND PRIOR TO PLACEMENT OF SELECT FILL. MIDDLE BEDDING IS UNCOMPACTED.
6. OVERFILL (BACKFILL) SOILS TO BE PLACED PER STANDARD SPECIFICATION 02700 STORM DRAINAGE FOR THE APPLICABLE BACKFILL TYPE AND BURY LIMITATIONS.
7. THESE TWO TABLES WERE MODIFIED TO GENERALLY CONFORM TO THE NCDOT STANDARDS AS SHOWN IN DETAIL 300.01 RIGID PIPE IN TRENCH CONDITION.

REFERENCE SOURCES:
1. AMERICAN CONCRETE PIPE ASSOCIATION DESIGN STANDARDS
2. 2012 NCDOT STANDARD SPECIFICATIONS FOR ROADS AND STRUCTURES AND NCDOT STANDARD DETAILS 300.01 FOR RIGID PIPE, TRENCH CONDITIONS."

STORM DRAIN PIPE INSTALLATION

FILL HEIGHT TABLE[A]

	TYPE 3 (BEDDING) INSTALLATION (0.01 INCH CRACK)		TYPE 4 (BEDDING) INSTALLATION (0.01 INCH CRACK)	
INSIDE PIPE DIAMETER Di (INCHES)	CLASS III PIPE MAXIMUM BURY H (FEET)	CLASS IV PIPE MAXIMUM BURY H (FEET)	CLASS III PIPE MAXIMUM BURY H (FEET)	CLASS IV PIPE MAXIMUM BURY H (FEET)
15	2 MIN, 12 MAX	1 MIN, 20 MAX	3 MIN, 7 MAX	2 MIN, 12 MAX
18	2 MIN, 12 MAX	1 MIN, 20 MAX	3 MIN, 7 MAX	1 MIN, 13 MAX
24	1 MIN, 12 MAX	1 MIN, 20 MAX	2 MIN, 8 MAX	1 MIN, 13 MAX
30	1 MIN, 12 MAX	1 MIN, 20 MAX	1 MIN, 8 MAX	1 MIN, 13 MAX
36	1 MIN, 12 MAX	1 MIN, 20 MAX	1 MIN, 8 MAX	1 MIN, 13 MAX
42	1 MIN, 12 MAX	1 MIN, 20 MAX	1 MIN, 8 MAX	1 MIN, 13 MAX
48	1 MIN, 12 MAX	1 MIN, 19 MAX	1 MIN, 8 MAX	1 MIN, 13 MAX
54	1 MIN, 12 MAX	1 MIN, 19 MAX	1 MIN, 8 MAX	1 MIN, 13 MAX
60	1 MIN, 12 MAX	1 MIN, 19 MAX	1 MIN, 8 MAX	1 MIN, 13 MAX
72	1 MIN, 11 MAX	1 MIN, 19 MAX	1 MIN, 7 MAX	1 MIN, 13 MAX

FILL HEIGHT TABLE BASE ON:
1. Ys = 120 PCF (BACKFILL LOAD)
2. AASHTO HL–93 LIVE LOAD
3. POSITIVE PROJECTING EMBANKMENT CONDITION (THIS GIVES CONSERVATIVE RESULTS IN COMPARISON TO TRENCH CONDITIONS)
4. PIPE = REINFORCED CONCRETE PIPE MEETING ASTM C76 (AASHTO M170), WALL C THICKNESS
5. CONCRETE PIPE SHOULD BE INSTALLED IN ACCORDANCE WITH AASHTO LRFD BRIDGE CONSTRUCTION SPECIFICATIONS SECTION 27 OR ASTM C1479.

[A] FILL HEIGHT TABLES, THE PORTION EXCERPTED HERE. WAS DEVELOPED BY THE AMERICAN CONCRETE PIPE ASSOCIATION (ACPA) USING THE INDIRECT DESIGN METHOD IN ACCORDANCE WITH SECTION 12.10.4.3 OF THE AASHTO LRFD BRIDGE DESIGN SPECIFICATION, 4TH, 2007 WITH 2008 INTERIM.

NOTES:
1. GREATER BURY DEPTHS THAN THOSE SHOWN ABOVE ARE ACHIEVABLE BY EITHER USING TYPE 1 OR 2 INSTALLATION, USING CLASS V PIPE, CONTROLLING BACKFILL TYPE, CALCULATING DEPTH USING A TRENCH CONDITION, OR BY SPECIAL DESIGN. SEE ALSO DESIGN DATA 9 PUBLISHED BY THE ACPA FOR DESIGN METHODOLOGY.
2. IN LIEU OF CALCULATING BURY DEPTH FOR OTHER CONDITIONS, FIRST SEE "LRFD FILL HEIGHT TABLES FOR CONCRETE PIPE", LAST REVISED JULY 2009 OR LATER), PREPARED BY THE ACPA FOR OTHER BURY DEPTH POSSIBILITIES

STORM DRAIN PIPE INSTALLATION

McADAMS
The John R. McAdams Company, Inc.
2905 Meridian Parkway
Durham, NC 27713

phone 919. 361. 5000
fax 919. 361. 2269
license number: C-0293, C-187

www.mcadamsco.com

CLIENT

ALLIANCE GROUP OF NC, LLC
7208 FALLS OF NEUSE RD, SUITE 101
RALEIGH, NORTH CAROLINA 27615
CONTACT: JACOB ANDERSON
PHONE: 919. 239. 9486

AGNC BROKERAGE | CONSULTING | PLANNING

PEARCE FARM - PHASES 1-3
CONSTRUCTION DRAWINGS - PACKAGE 1
BURLINGTON MILLS ROAD
TOWN OF ROLESVILLE, NORTH CAROLINA

CID-24-08

NORTH CAROLINA PROFESSIONAL ENGINEER SEAL 22630 WILLIAM T. O'DONNELL — NOT FOR CONSTRUCTION

REVISIONS

NO.	DATE	
1	02. 03. 2025	REVISED PER TOWN, CITY AND COUNTY COMMENTS

PLAN INFORMATION

PROJECT NO.	AGN23001
FILENAME	AGN23001-D1
CHECKED BY	.
DRAWN BY	.
SCALE	N.T.S.
DATE	12. 02. 2024

SHEET

STORM DRAINAGE DETAILS

C8.03

X:\Projects\AGN\AGN23001\04-Production\Engineering\Construction Drawings\Current Drawings\AGN23001-D1.dwg, 1/28/2025 1:08:08 PM, Sherrill Williams

FINAL DRAWING - NOT RELEASED FOR CONSTRUCTION

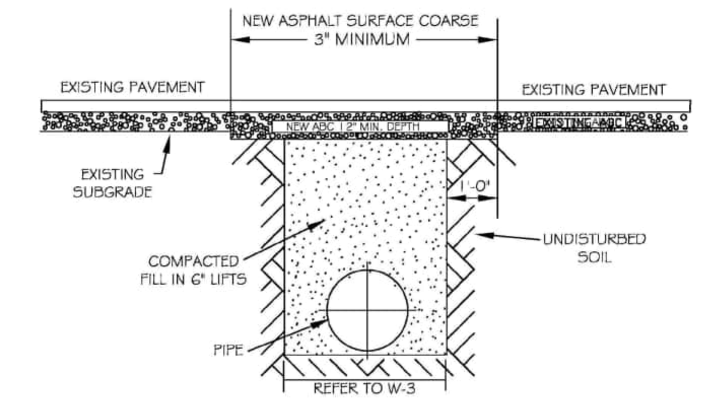

NOTES:

1. THE PAVEMENT CUT SHALL BE DEFINED BY A STRAIGHT EDGE AND CUT WITH AN APPROPRIATE SAW CUT MACHINE.
2. THE TRENCH SUBGRADE MATERIAL SHALL BE BACKFILLED WITH SUITABLE MATERIAL AND COMPACTED TO A DENSITY OF AT LEAST 95% OF THAT OBTAINED BY COMPACTING A SAMPLE OF THE MATERIAL IN ACCORDANCE WITH AASHTO T-99 AS MODIFIED BY NCDOT.
3. THE FINAL 1' OF FILL SHALL CONSIST OF ABC MATERIAL COMPACTED TO A DENSITY EQUAL TO 100% OF THAT OBTAINED BY COMPACTING A SAMPLE OF THE MATERIAL IN ACCORDANCE WITH AASHTO T-80 AS MODIFIED BY NCDOT.
4. THE ENTIRE THICKNESS/ VERTICAL EDGE OF CUT SHALL BE TACKED.
5. THE SAME DEPTH OF PAVEMENT MATERIAL WHICH EXISTS SHALL BE REINSTALLED, BUT IN NO CASE SHALL THE ASPHALT BE LESS THAN 3" THICK.
6. THE ASPHALT PAVEMENT MATERIAL SHALL BE INSTALLED AND COMPACTED THOROUGHLY WITH A SMOOTH DRUM ROLLER TO ACHIEVE A SMOOTH LEVEL PATCH.
7. REFER TO CITY OF RALEIGH STANDARDS FOR TRENCHES AND PIPE BEDDING, W-3. FOR ADDITIONAL DETAILS.
8. NO HAND PATCHING ALLOWED.
9. PAVEMENT CUTS WITHIN NCDOT ROW SHALL CONFORM TO THE APPROVED ON SITE ENCROACHMENT PERMIT.

CITY OF RALEIGH
DEPARTMENT OF PUBLIC UTILITIES
STANDARD ASPHALT PAVEMENT PATCH DETAIL

DWG. NO.	REVISIONS	DATE	REVISIONS	DATE
W-2	RRH	3-31-00	A.B.B.	4-16-04
	D.W.C.	11-1-99	J.P.S.	10-29-10

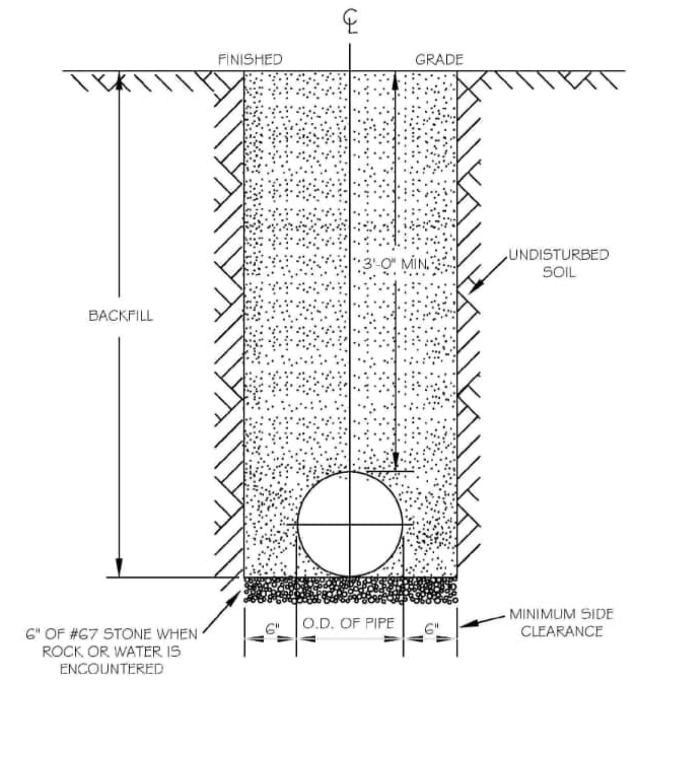

NOTES:
1. TRENCHES REQUIRING SHORING AND BRACING, DIMENSIONS SHALL BE TAKEN FROM THE INSIDE FACE OF THE SHORING AND BRACING.
2. NO ROCKS OR BOULDERS 4" OR LARGER TO BE USED IN BACKFILL.
3. ALL BACKFILL MATERIAL SHALL BE SUITABLE NATIVE MATERIAL.
4. BACKFILL SHALL BE TAMPED IN 6" LIFTS.
5. ACHIEVE 95% COMPACTION IN BACKFILL.

CITY OF RALEIGH
DEPARTMENT OF PUBLIC UTILITIES
TRENCH BOTTOM DIMENSIONS & BACKFILLING REQUIREMENTS FOR DUCTILE IRON

DWG. NO.	REVISIONS	DATE	REVISIONS	DATE
W-3	D.W.C.	9-3-99	ABB	2-15-05
	RRH	3-31-00	J.P.S.	10-29-10

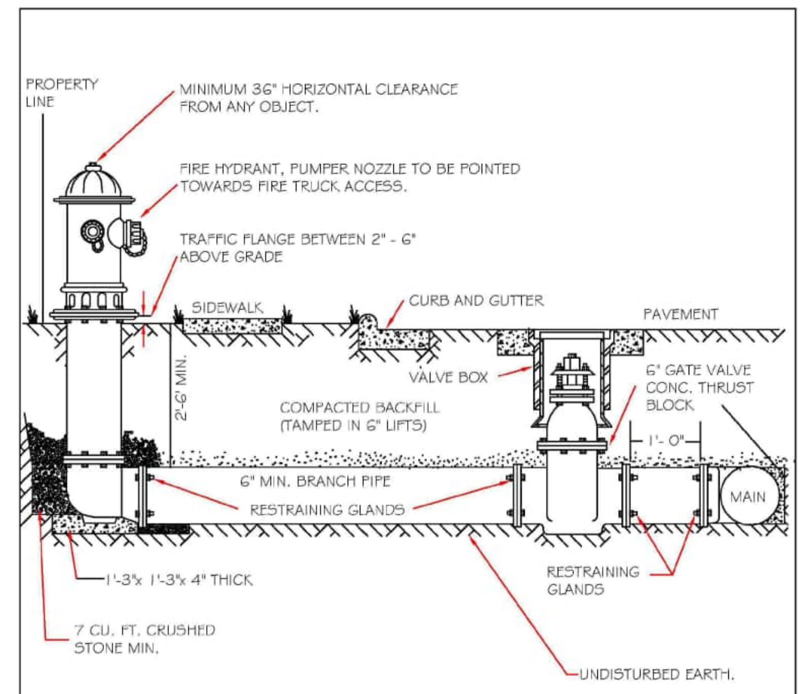

NOTES:
1. FIRE HYDRANT SHALL BE AS MANUFACTURED: MUELLER, AMERICAN DARLING, KENNEDY, M&H, WATEROUS, CLOW, EAST JORDAN IRON WORKS, OR US PIPE.
2. BRANCH PIPE SHALL BE DUCTILE IRON AWWA C150-96
3. 6" GATE VALVE SHALL BE AWWA C500-86 OPEN LEFT
4. STEEL RODS AND BOLTS SHALL BE ¾" HOT DIPPED GALVANIZED
5. FIRE HYDRANTS WILL BE INSTALLED IN TRUE VERTICAL POSITION RODS SHALL NOT BE COUPLED MORE THAN ONCE. IF THE LENGTH FROM THE VALVE TO THE HYDRANT EXCEEDS 20' THEN A MECHANICAL RESTRAINING GLAND WITH A REBAR CAGE SHALL BE INSTALLED NO MORE THAN 10' FROM HYDRANT AND POURED IN CONCRETE. FIRE HYDRANTS TO BE LOCATED IN ROW OR 2 FOOT EASEMENT ADJACENT TO ROW

ANYTIME SITE WORK, CONSTRUCTION, ROAD WORK, OR ANY OTHER WORK CHANGES THE GRADE OF THE FIRE HYDRANT, THE PERSON RESPONSIBLE FOR THE WORK IS RESPONSIBLE FOR ADJUSTING THE FIRE HYDRANT TO STAY WITHIN COMPLIANCE.

CITY OF RALEIGH
DEPARTMENT OF PUBLIC UTILITIES
STANDARD FIRE HYDRANT INSTALLATION DETAIL

DWG. NO.	REVISIONS	DATE	REVISIONS	DATE
W-4	ABB	4-6-04	PAP	2/17/09
	DHL	2/14/08		

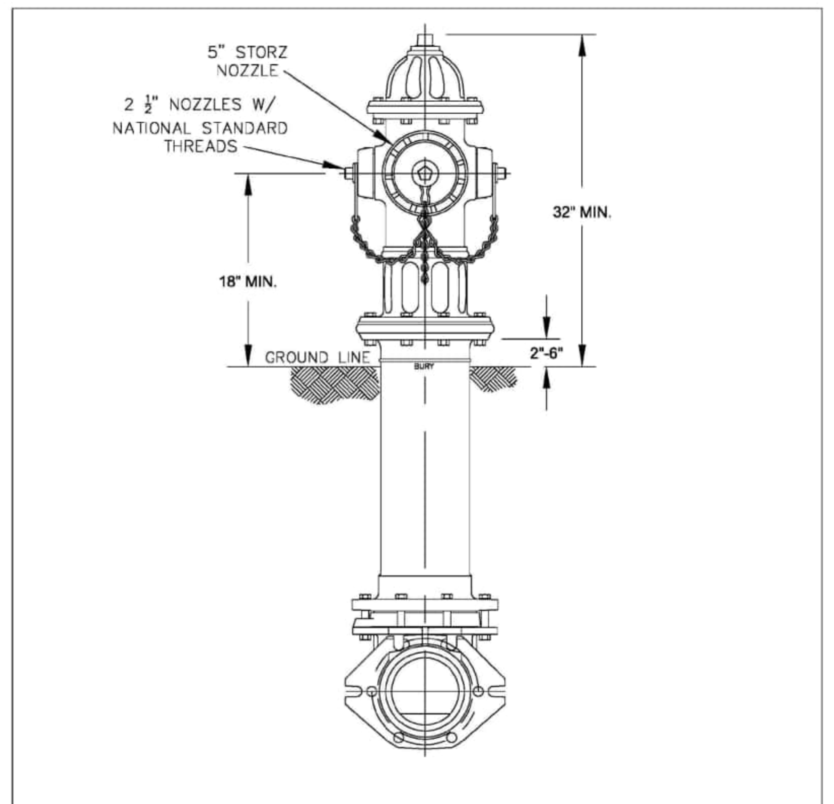

NOTES:
1. ALL PUBLIC FIRE HYDRANTS IN THE CITY OF RALEIGH AND THE MERGER TOWNS OF GARNER, ROLESVILLE, WAKE FOREST, KNIGHTDALE, WENDELL AND ZEBULON SHALL BE PAINTED CHROME YELLOW WITH HIGH REFLECTIVE ALUMINUM SILVER CAPS, BONNETS AND OPERATING NUTS.
2. ALL PRIVATE FIRE HYDRANTS SHALL BE RED.

CITY OF RALEIGH
DEPARTMENT OF PUBLIC UTILITIES
RALEIGH, GARNER, KNIGHTDALE, ROLESVILLE, WAKE FOREST, WENDELL & ZEBULON
STANDARD FIRE HYDRANT WITH 5" STORZ PUMPER NOZZLE

DWG. NO.	REVISIONS	DATE	REVISIONS	DATE
W-5	MAB	6-30-16		
	KAT	9-15-17		

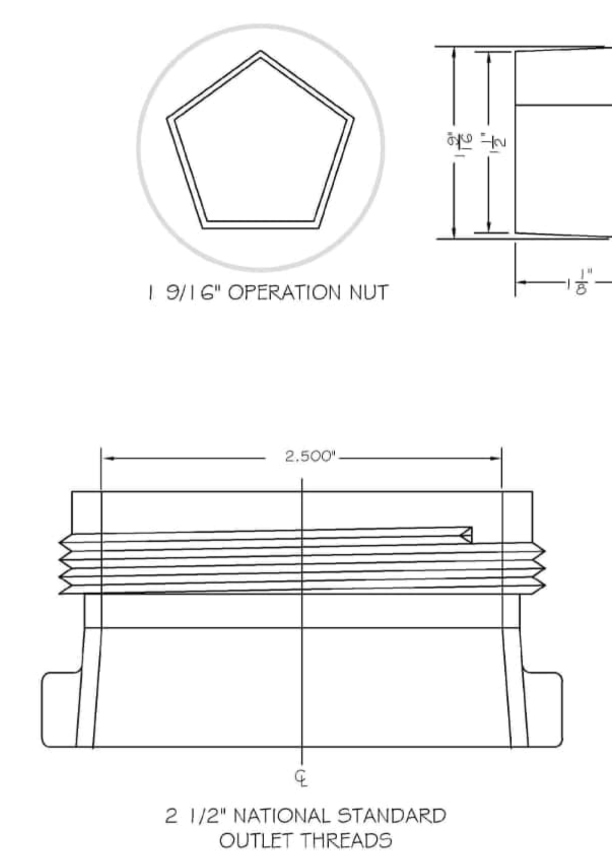

CITY OF RALEIGH
DEPARTMENT OF PUBLIC UTILITIES
HYDRANT OPERATING NUT AND 2 1/2" OUTLET THREADS

DWG. NO.	REVISIONS	DATE	REVISIONS	DATE
W-6	RRH	3-31-00	DHL	2-18-08
	A.B.B	4-13-04	J.P.S	11-1-10

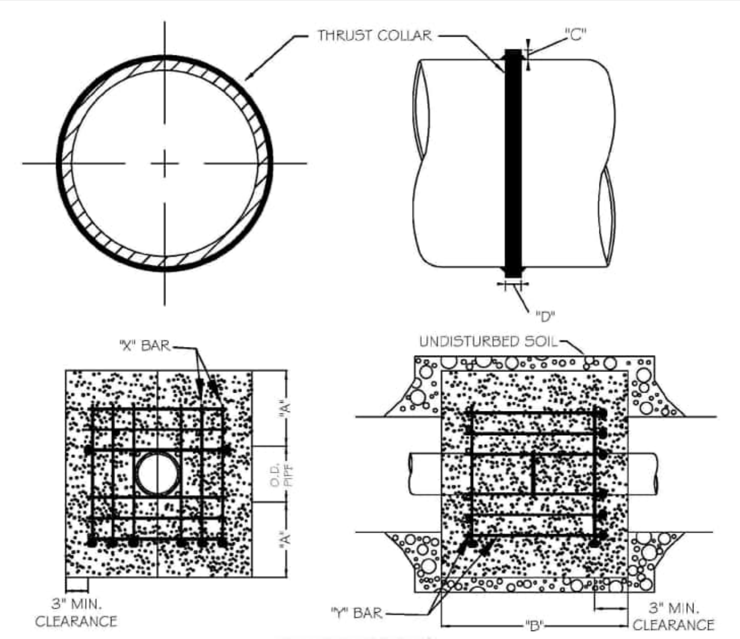

REINFORCING REQUIREMENTS

I.D. PIPE	REBAR SIZE	"X" BAR LENGTH	"X" BAR WEIGHT	"Y" BAR LENGTH	"Y" BAR WEIGHT	NO. REQUIRED
6" - 36"	#5	2'-2"+ O.D. PIPE	1.043 LBS/FT	1'-1"	1.1 LBS. EACH	X-24, Y-12
48" & greater	#6	3'-0"+ O.D. PIPE	1.502 LBS/FT	1'-3"	1.9 LBS. EACH	X-24, Y-12

THRUST COLLAR, AND THRUST SCHEDULE

I.D. PIPE	"A"	"B"	"C"	"D"
6" - 16"	1'-4"	1'-7"	2"	3/8"
20" - 24"	1'-4"	1'-7"	3"	1/2"
30" - 36"	1'-4"	1'-7"	4"	5/8"
48" & greater	1'-8"	1'-9"	6"	7/8"

NOTES:
1. SEE STANDARD DETAIL W-9 FOR THRUST BLOCK LOCATIONS.
2. CONCRETE SHALL BE 3000 PSI AND TRANSIT MIXED.
3. REINFORCING BARS SHALL BE DEFORMED AND TIED TOGETHER.
4. TRENCH BOTTOM WIDTH IN VICINITY OF THRUST BLOCK INSTALLATION SHALL BE THE MINIMUM WIDTH AS SHOWN ON STANDARD DETAIL W-3.
5. BACKFILL TAMPED IN 6" LIFTS PER STANDARD DETAIL W-3.
6. THRUST COLLAR MUST BE FACTORY WELDED ON BOTH SIDES ALONG BOTH EDGES OF COLLAR AROUND CIRCUMFERENCE.

CITY OF RALEIGH
DEPARTMENT OF PUBLIC UTILITIES
THRUST BLOCKING DESIGN DATA FOR WATER MAINS

DWG. NO.	REVISIONS	DATE	REVISIONS	DATE
W-7	RRH	1-21-00	J.P.S.	11-1-10
	D.H.L.	6-18-08		

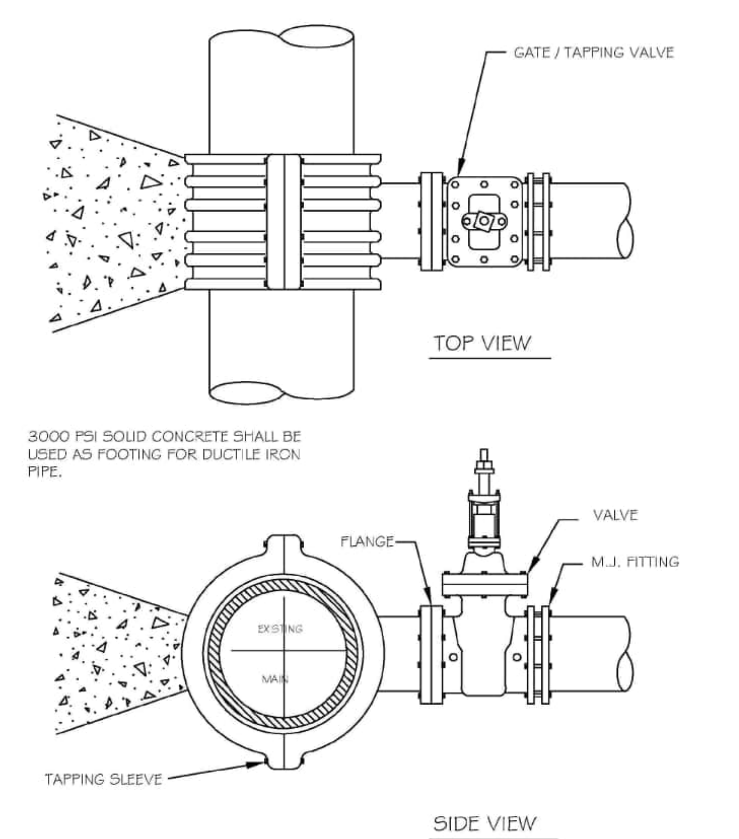

NOTES:
1. CONCRETE SHALL NOT CONTACT BOLTS OR ENDS OF MECHANICAL JOINT FITTINGS.
2. SEE STANDARD REACTION BLOCK TABLES, W-10 AND W-11 FOR AREA OF CONCRETE REQUIRED.

CITY OF RALEIGH
DEPARTMENT OF PUBLIC UTILITIES
4" - 24" STANDARD TAPPING SLEEVE AND VALVE ASSEMBLY

DWG. NO.	REVISIONS	DATE	REVISIONS	DATE
W-14	Y.C.A.	12-31-91	RRH	3-31-00
	D.W.C.	9-7-99	J.P.S.	11-1-10

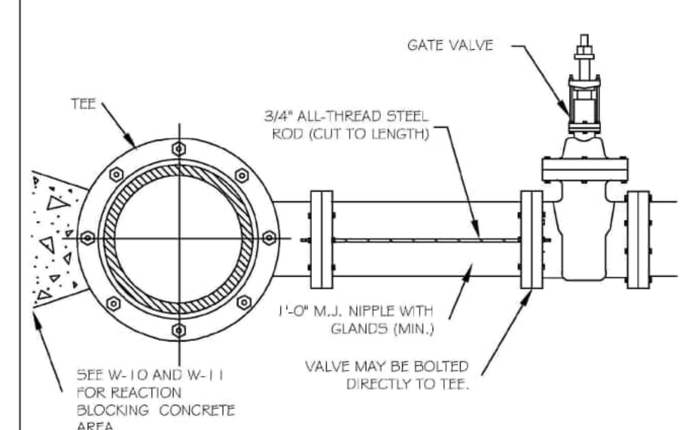

ROD REQUIREMENTS

NO. OF RODS	BRANCH SIZE
4"	2
6"	2
8"	4
12"	4
16"	6
24"	6
30"	8
36"	8

NOTES:
1. STEEL RODS AND BOLTS SHALL BE 3/4" HOT DIPPED GALVANIZED.
2. SEE STANDARD THRUST BLOCK. TABLES W-10 AND W-11 FOR CONCRETE.
3. CONCRETE SHALL NOT CONTACT BOLTS OR ENDS OF MECHANICAL FITTINGS.
4. THIS RODDING REQUIREMENT DOES NOT APPLY TO FIRE HYDRANTS.

CITY OF RALEIGH
DEPARTMENT OF PUBLIC UTILITIES
VALVE RESTRAINT AT TEES AND CROSSES FOR LINES (4"-24")

DWG. NO.	REVISIONS	DATE	REVISIONS	DATE
W-15	RRH	3-31-00	D.H.L.	6-16-08
	A.B.B.	4-19-04	J.P.S.	11-1-10

APPROVED METHOD FOR EXTENSION OF VALVE BOX

NOTE: 2x 2x 6" CONCRETE PAD REQUIRED ON ALL VALVES. NO PRECAST CONCRETE DOUGHNUT ALLOWED.

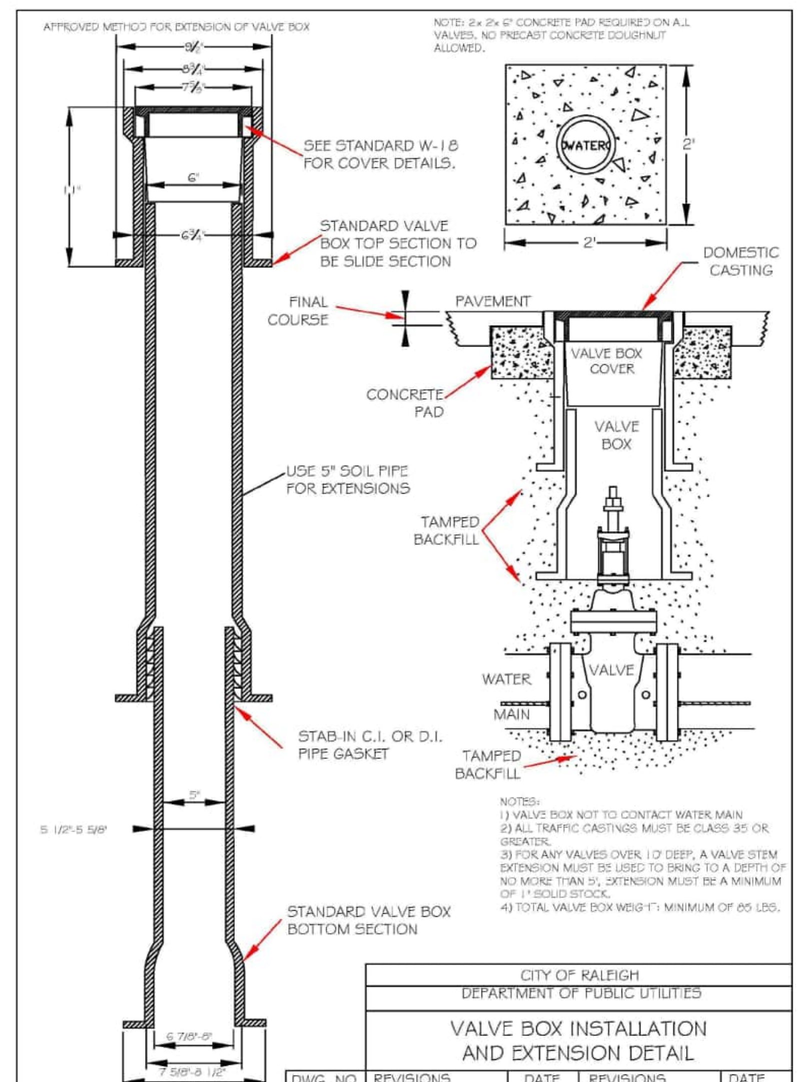

NOTES:
1) VALVE BOX NOT TO CONTACT WATER MAIN
2) ALL TRAFFIC CASTINGS MUST BE CLASS 35 OR GREATER.
3) FOR ANY VALVES OVER 10' DEEP, A VALVE STEM EXTENSION MUST BE USED TO BRING TO A DEPTH OF NO MORE THAN 5', EXTENSION MUST BE A MINIMUM OF 1" SOLID STOCK.
4) TOTAL VALVE BOX WEIGHT: MINIMUM OF 85 LBS.

CITY OF RALEIGH
DEPARTMENT OF PUBLIC UTILITIES
VALVE BOX INSTALLATION AND EXTENSION DETAIL

DWG. NO.	REVISIONS	DATE	REVISIONS	DATE
W-17	D.W.C.	9-7-99	A.B.B.	4-15-04
	RRH	3-31-00	DHL	8-16-07

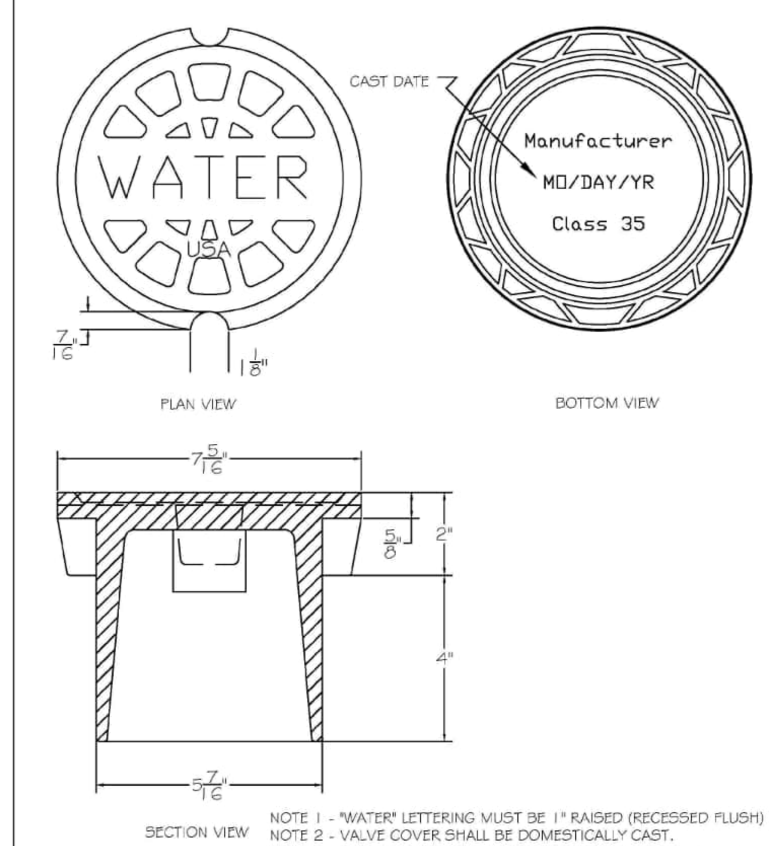

NOTE 1 - "WATER" LETTERING MUST BE 1" RAISED (RECESSED FLUSH)
NOTE 2 - VALVE COVER SHALL BE DOMESTICALLY CAST.
NOTE 3 - COVER MUST HAVE A MINIMUM WEIGHT OF 25 POUNDS.
NOTE 4 - COVER MUST BE CLASS 35 OR GREATER.
NOTE 5 - COVER MUST MEET OR EXCEED AASHTO H-20 LOAD REQUIREMENTS.

CITY OF RALEIGH
DEPARTMENT OF PUBLIC UTILITIES
5 1/4" VALVE BOX DROP LID WITH 4" SKIRT

DWG. NO.	REVISIONS	DATE	REVISIONS	DATE
W-18				

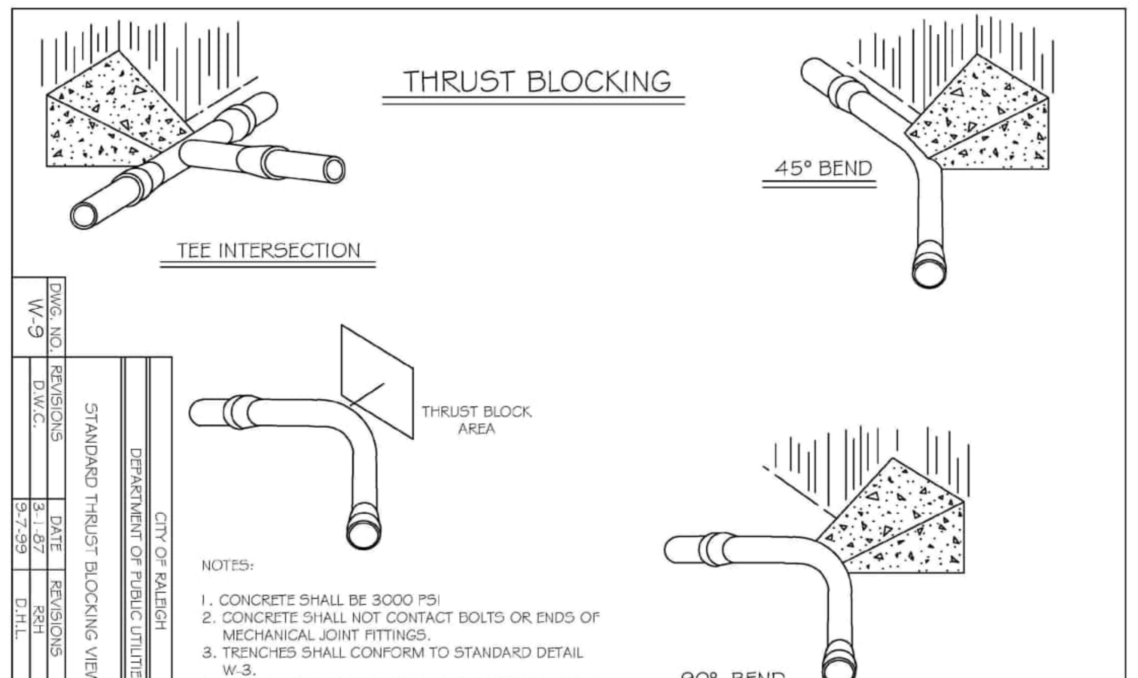

NOTES:

1. CONCRETE SHALL BE 3000 PSI
2. CONCRETE SHALL NOT CONTACT BOLTS OR ENDS OF MECHANICAL JOINT FITTINGS.
3. TRENCHES SHALL CONFORM TO STANDARD DETAIL W-3.
4. SEE STANDARD THRUST BLOCK TABLES, W-10 THRU W-11, FOR AREA OF CONCRETE REQUIRED.
5. ALL BENDS AND INTERSECTIONS SHALL HAVE CONCRETE THRUST BLOCKING.

CITY OF RALEIGH
DEPARTMENT OF PUBLIC UTILITIES
STANDARD THRUST BLOCKING VIEWS

DWG. NO.	REVISIONS	DATE	REVISIONS	DATE
W-9	D.W.C.	3-1-87	RRH	3-31-00
		9-7-99	D.H.L.	6-18-08

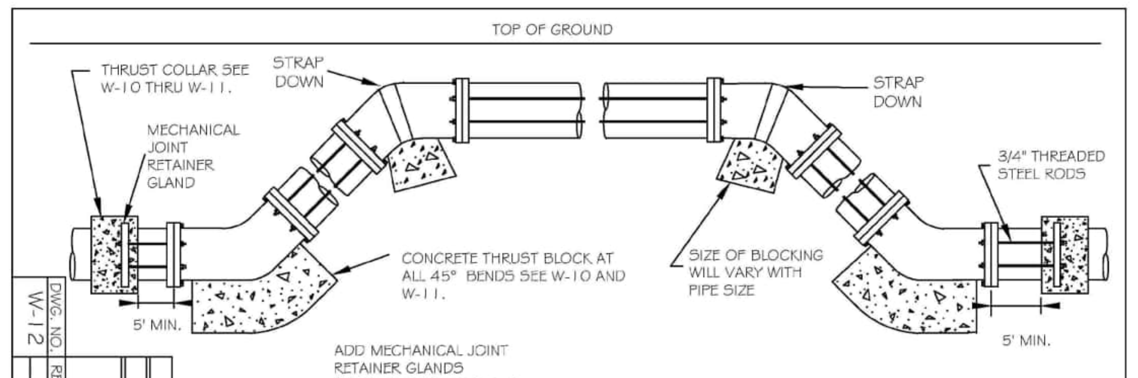

ROD REQUIREMENTS

SIZE OF 45 BEND	STATIC THRUST IN POUNDS	NO. OF RODS REQUIRED
6"	4,328	2
8"	7,694	4
12"	17,312	4
16"	30,779	8
24"	69,252	8

GENERAL NOTES:
1. STEEL RODS AND BOLTS SHALL BE 3/4" HOT DIPPED GALVANIZED.
2. CONCRETE SHALL NOT CONTACT BOLTS OR ENDS OF MECHANICAL JOINT BENDS.
3. RESTRAINED MECHANICAL GLANDS TO BE USED AT ALL FITTINGS.
4. MUST USE DUCTILE IRON EYE BOLTS WHERE NECESSARY.
5. 3' MINIMUM COVER MUST BE MAINTAINED ON ALL WATER MAINS

CITY OF RALEIGH
DEPARTMENT OF PUBLIC UTILITIES
STANDARD VERTICAL BEND

DWG. NO.	REVISIONS	DATE	REVISIONS	DATE
W-12	ABB	4-6-04	J.P.S.	11-1-10
	D.H.L.	6-18-08		

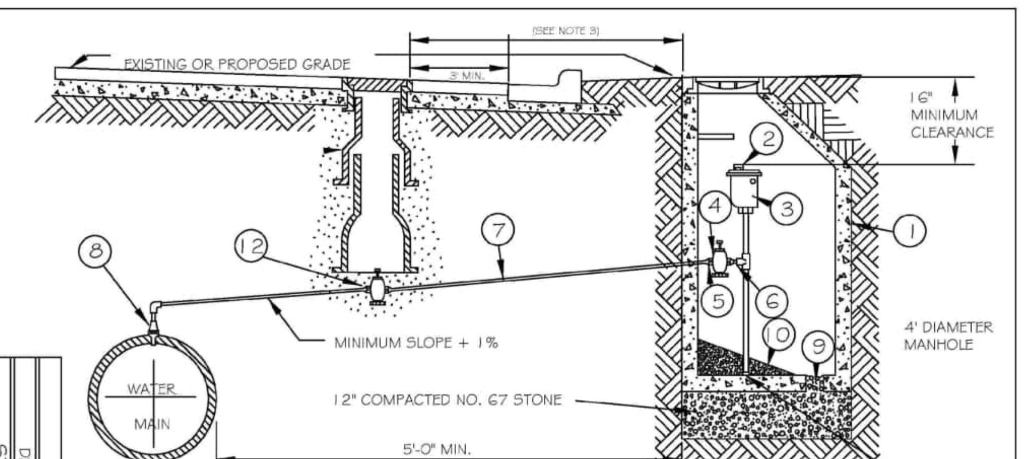

BILL OF MATERIALS

1	PRECAST MANHOLE, SEE STANDARD DETAIL S-20
2	TRASH HOOD
3	2" AIR RELEASE VALVE
4	2" CURB STOP BALL VALVE
5	ADAPTER
6	2" MECHANICAL JOINT BRASS PIPE AND FITTINGS
7	2" TYPE "K", SOFT COPPER WITH FLARED ELBOW
8	CORPORATION COCK
9	6" DIAMETER DRAIN
10	GROUT, 1/8" TO 1'-0" MIN. SLOPE TO DRAIN
11	PIPE CAP
12	2"-GATE VALVE

SEE STANDARD DETAIL W-3 TO INSURE PROPER BACKFILL.

NOTE:
1. AIR VALVE TO BE P-20 WITH VACUUM CHECK BY CRISPIN OR VAL MATIC VM 45.
2. THE AIR RELEASE MANHOLE SHALL BE INSTALLED IN THE SHOULDER OR AS DIRECTED BY THE ENGINEER.
3. FOR MAINS LOCATED OUTSIDE OF STREET RIGHT-OF-WAYS THE MAXIMUM DISTANCE BETWEEN THE MANHOLE AND THE VALVE BOX SHOULD BE THREE (3) FEET.
4. MAIN SHALL BE DEEP ENOUGH TO ACCOMODATE INSTALLATION AS SHOWN

CITY OF RALEIGH
DEPARTMENT OF PUBLIC UTILITIES
STANDARD WATER AIR RELEASE VALVE

DWG. NO.	REVISIONS	DATE	REVISIONS	DATE
W-19	ABB	10-4-04	RRH	2-31-91
	J.P.S.	11-1-10		6-7-00

Public
Water Distribution / Extension System
The City of Raleigh consents to the connection and extension of the City's public water system as shown on this plan. The material and Construction methods used for this project shall conform to the standards and specifications of the City's Public Utilities Handbook.
City of Raleigh
Public Utilities Department Permit # ____________

Private
Sewer Collection / Extension System
The City of Raleigh consents to the connection to its public sewer system and extension of the private sewer collection system as shown on this plan. The material and constructions methods used for this project shall conform to the standards and specifications of the City's Public Utilities Handbook.
City of Raleigh
Public Utilities Department Permit # ____________

Public
Sewer Collection / Extension System
The City of Raleigh consents to the connection and extension of the City's public sewer system as shown on this plan. The material and Construction methods used for this project shall conform to the standards and specifications of the City's Public Utilities Handbook.
City of Raleigh
Public Utilities Department Permit # ____________

FINAL DRAWING - NOT RELEASED FOR CONSTRUCTION

X:\Projects\AGN\AGN23001\04-Production\Engineering\Construction Drawings\Current Drawings\AGN23001-D1.dwg, 1/28/2025 1:08:22 PM, Sherrill Williams

MCADAMS
The John R. McAdams Company, Inc.
2905 Meridian Parkway
Durham, NC 27713

phone 919. 361. 5000
fax 919. 361. 2269
license number: C-0293, C-187

www.mcadamsco.com

CLIENT

ALLIANCE GROUP OF NC, LLC
7208 FALLS OF NEUSE RD, SUITE 101
RALEIGH, NORTH CAROLINA 27615
CONTACT: JACOB ANDERSON
PHONE: 919. 239. 9486

AGNC
BROKERAGE | CONSULTING | PLANNING

PEARCE FARM - PHASES 1-3
CONSTRUCTION DRAWINGS - PACKAGE 1
BURLINGTON MILLS ROAD
TOWN OF ROLESVILLE, NORTH CAROLINA

CID-24-08

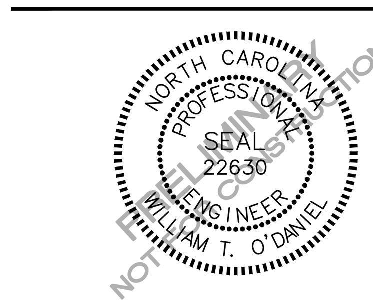

REVISIONS

NO.	DATE	
1	02. 03. 2025	REVISED PER TOWN, CITY AND COUNTY COMMENTS

PLAN INFORMATION

PROJECT NO.	AGN23001
FILENAME	AGN23001-D1
CHECKED BY	.
DRAWN BY	.
SCALE	N.T.S.
DATE	12. 02. 2024

SHEET

WATER DETAILS

C8.04

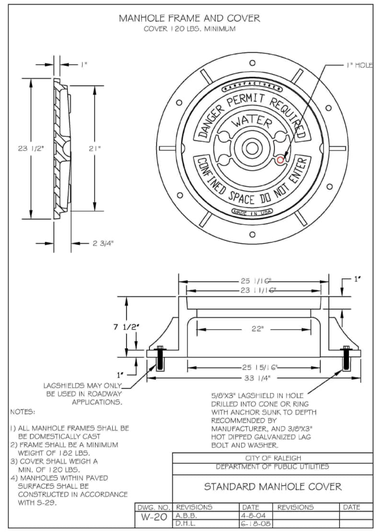

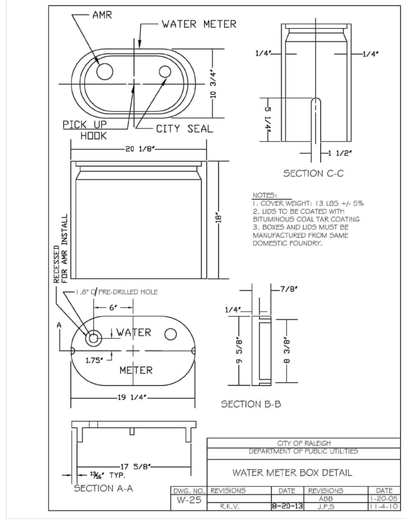

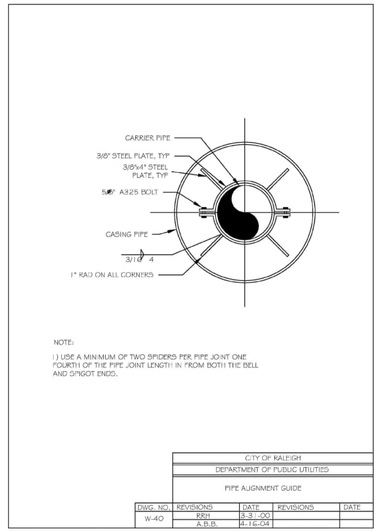

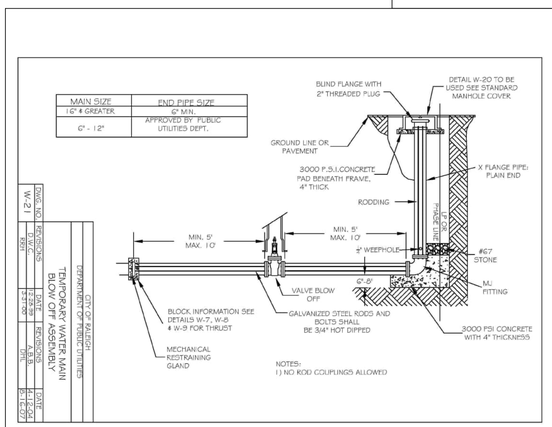

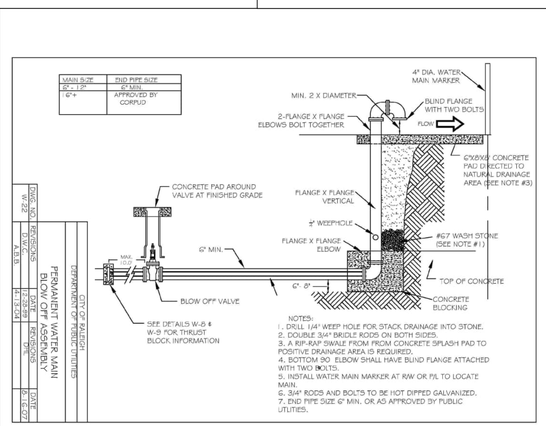

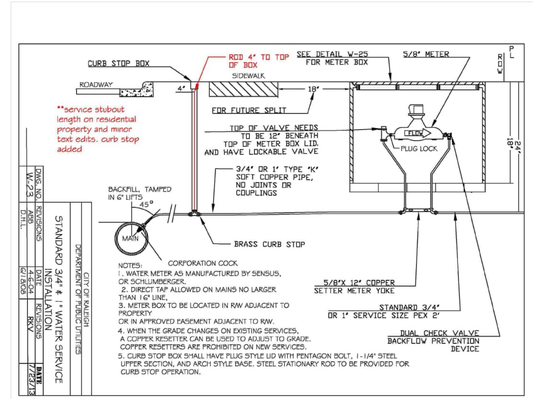

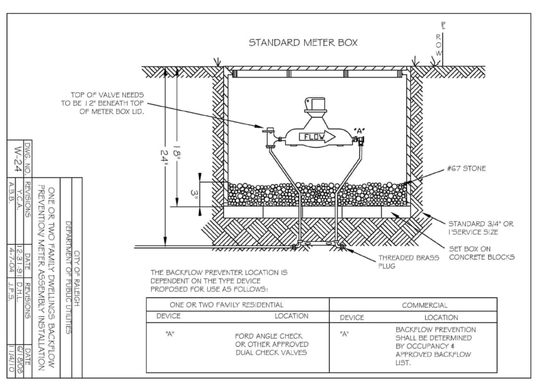

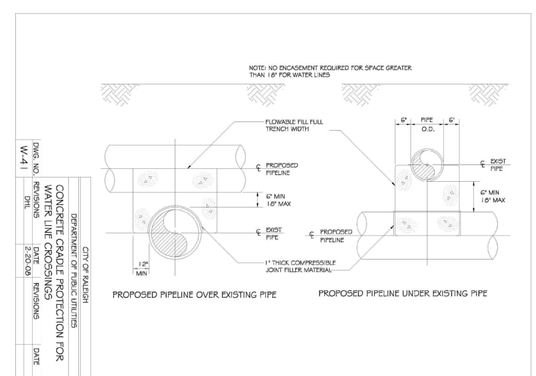

Public
Water Distribution / Extension System

The City of Raleigh consents to the connection and extension of the City's public water system as shown on this plan. The material and Construction methods used for this project shall conform to the standards and specifications of the City's Public Utilities Handbook.

City of Raleigh
Public Utilities Department Permit # _____

Private
Sewer Collection / Extension System

The City of Raleigh consents to the connection to its public sewer system and extension of the private sewer collection system as shown on this plan. The material and constructions methods used for this project shall conform to the standards and specifications of the City's Public Utilities Handbook.

City of Raleigh
Public Utilities Department Permit # _____

Public
Sewer Collection / Extension System

The City of Raleigh consents to the connection and extension of the City's public sewer system as shown on this plan. The material and Construction methods used for this project shall conform to the standards and specifications of the City's Public Utilities Handbook.

City of Raleigh
Public Utilities Department Permit # _____

FINAL DRAWING - NOT RELEASED FOR CONSTRUCTION

McADAMS
The John R. McAdams Company, Inc.
2905 Meridian Parkway
Durham, NC 27713

phone 919. 361. 5000
fax 919. 361. 2269
license number: C-0293, C-187

www.mcadamsco.com

CLIENT

ALLIANCE GROUP OF NC, LLC
7208 FALLS OF NEUSE RD, SUITE 101
RALEIGH, NORTH CAROLINA 27615
CONTACT: JACOB ANDERSON
PHONE: 919. 239. 9486

AGNC BROKERAGE | CONSULTING | PLANNING

PEARCE FARM - PHASES 1-3
CONSTRUCTION DRAWINGS - PACKAGE 1
BURLINGTON MILLS ROAD
TOWN OF ROLESVILLE, NORTH CAROLINA

CID-24-08

NORTH CAROLINA PROFESSIONAL ENGINEER SEAL 22630 WILLIAM T. O'DANIEL — NOT FOR CONSTRUCTION

REVISIONS

NO.	DATE	
1	02. 03. 2025	REVISED PER TOWN, CITY AND COUNTY COMMENTS

PLAN INFORMATION

PROJECT NO.	AGN23001
FILENAME	AGN23001-D1
CHECKED BY	.
DRAWN BY	.
SCALE	N.T.S.
DATE	12. 02. 2024

SHEET

WATER DETAILS
C8.05

X:\Projects\AGN\AGN23001\04-Production\Engineering\Construction Drawings\Current Drawings\AGN23001-D1.dwg, 1/28/2025 1:08:45 PM, Sherrill Williams

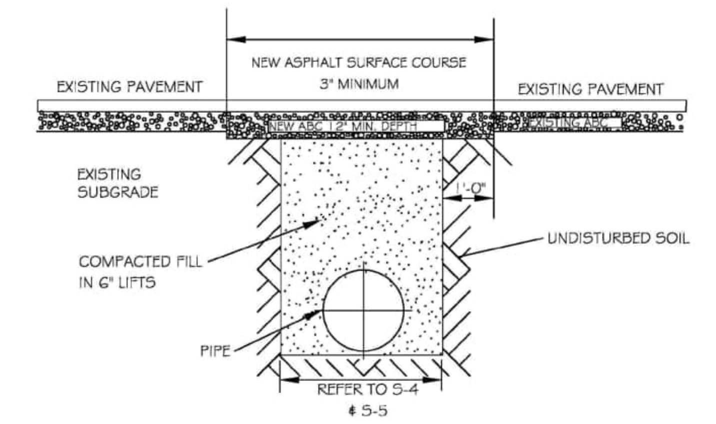

NOTES:
1. IN NCDOT MAINTAINED ROADWAYS ENCROACHMENT PAVEMENT PATCH REQUIREMENTS SHALL TAKE PRECEDENCE.
2. THE PAVEMENT CUT SHALL BE DEFINED BY A STRAIGHT EDGE AND CUT WITH AN APPROPRIATE SAWCUT MACHINE.
3. THE TRENCH SUBGRADE MATERIAL SHALL BE BACKFILLED WITH SUITABLE MATERIAL AND COMPACTED TO A DENSITY OF AT LEAST 95% OF THAT OBTAINED BY COMPACTING A SAMPLE OF THE MATERIAL IN ACCORDANCE WITH AASHTO T-99 AS MODIFIED BY NCDOT.
4. THE FINAL 1' OF FILL SHALL CONSIST OF ABC MATERIAL COMPACTED TO A DENSITY EQUAL TO 100% OF THAT OBTAINED BY COMPACTING A SAMPLE OF THE MATERIAL IN ACCORDANCE WITH AASHTO T-80 AS MODIFIED BY NCDOT.
5. THE ENTIRE THICKNESS AND VERTICAL EDGE OF CUT SHALL BE TACKED.
6. THE SAME DEPTH OF PAVEMENT MATERIAL WHICH EXISTS SHALL BE REINSTALLED, BUT IN NO CASE SHALL THE ASPHALT BE LESS THAN 3" THICK.
7. THE ASPHALT PAVEMENT MATERIAL SHALL BE INSTALLED AND COMPACTED THOROUGHLY WITH A SMOOTH DRUM ROLLER TO ACHIEVE A SMOOTH LEVEL PATCH.
8. REFER TO CITY OF RALEIGH STANDARDS FOR TRENCHES AND PIPE BEDDING (S-4 & S-5) FOR ADDITIONAL DETAILS.
9. NO HAND PATCHING ALLOWED.
10. PAVEMENT CUTS WITHIN NCDOT ROW SHALL CONFORM TO THE APPROVED ON SITE ENCROACHMENT PERMIT.

CITY OF RALEIGH
DEPARTMENT OF PUBLIC UTILITIES
STANDARD ASPHALT PAVEMENT PATCH DETAIL

DWG. NO.	REVISIONS	DATE	REVISIONS	DATE
S-3	D.W.C.	11-1-99	A.B.B.	4-19-04
	RRH	3-30-00	J.P.S.	10-8-10

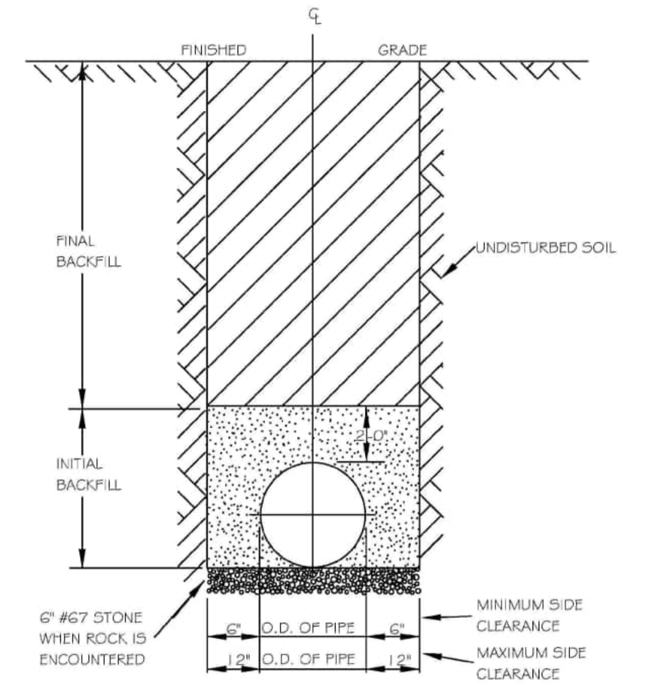

NOTES:
1. TRENCHES REQUIRING SHORING AND BRACING, DIMENSIONS SHALL BE TAKEN FROM THE INSIDE FACE OF THE SHORING AND BRACING.
2. NO ROCKS OR BOULDERS 4" OR LARGER TO BE USED IN INITIAL BACKFILL.
3. ALL BACKFILL MATERIAL SHALL BE SUITABLE NATIVE MATERIAL.
4. BACKFILL SHALL BE TAMPED IN 6" LIFTS IN TRAFFIC AREAS, 12" IN NON-TRAFFIC AREAS.
5. ACHIEVE 80% COMPACTION IN NON-TRAFFIC AREAS, AND 95% COMPACTION IN TRAFFIC AREAS.
6. IF IN EASEMENT 4" TOPSOIL, AND 12" CLEAN SELECT FILL MAY BE REQUIRED.
7. NO BOULDERS 8" IN DIAMETER OR GREATER ALLOWED IN FINAL BACKFILL.

CITY OF RALEIGH
DEPARTMENT OF PUBLIC UTILITIES
TRENCH BOTTOM DIMENSIONS & BACKFILLING REQUIREMENTS FOR DUCTILE IRON

DWG. NO.	REVISIONS	DATE	REVISIONS	DATE
S-4	D.W.C.	9-3-99		
	RRH	3-30-00		

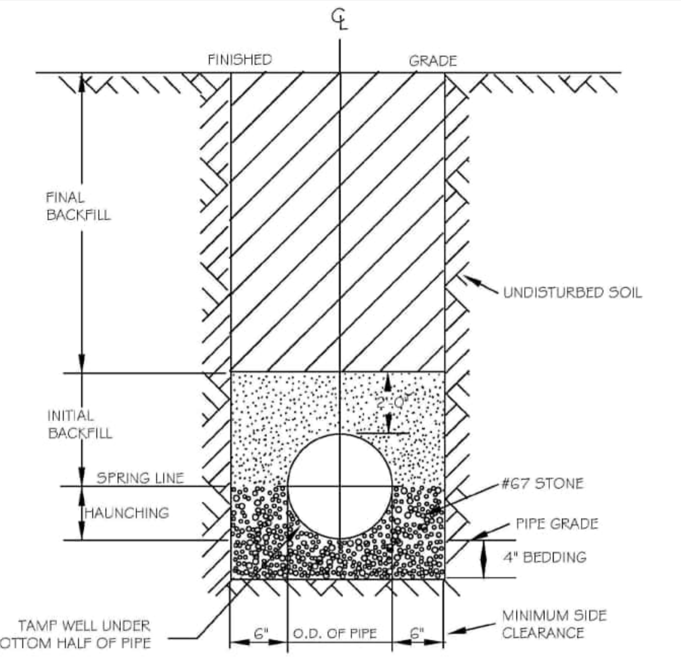

TYPICAL TRENCH BOTTOM DIMENSIONS FOR SDR 35 PVC GRAVITY PIPE

NOTES:
1. FOR TRENCHES REQUIRING SHORING AND BRACING, DIMENSIONS SHALL BE TAKEN FROM THE INSIDE FACE OF THE SHORING AND BRACING.
2. NO ROCKS OR BOULDERS 4" OR LARGER TO BE USED IN INITIAL BACKFILL.
3. ALL BACKFILL MATERIAL SHALL BE SUITABLE NATIVE MATERIAL.
4. BACKFILL SHALL BE TAMPED IN 6" LIFTS IN TRAFFIC AREAS, 12" IN NON-TRAFFIC AREAS.

CITY OF RALEIGH
DEPARTMENT OF PUBLIC UTILITIES
TRENCH BOTTOM DIMENSIONS AND BACKFILLING REQUIREMENTS FOR PVC GRAVITY SEWER MAIN

DWG. NO.	REVISIONS	DATE	REVISIONS	DATE
S-5	TO NOTES	3-1-87	D.W.C.	9-3-99
		7-2-82	RRH	3-30-00

AERIAL PIPE CROSSING

GENERAL NOTES:

1. ALL MATERIALS UTILIZED ON THESE DETAIL SHEETS SHALL CONFORM TO THE APPROPRIATE SECTIONS OF THE CITY OF RALEIGH PUBLIC UTILITIES HANDBOOK UNLESS NOTED OTHERWISE HEREIN.
2. RESTRAINED JOINT PIPE AND FITTINGS SHALL CONSIST OF BOLTED RETAINER RINGS AND WELDED RETAINER BARS OR BOLTLESS TYPE WHICH INCLUDE DUCTILE IRON LOCKING SEGMENTS AND RUBBER RETAINERS. BOLTS FOR RESTRAINED JOINTS (IF APPLICABLE) SHALL CONFORM TO ANSI B18.2. RESTRAINED PIPE AND FITTINGS SHALL BE FLEX-RING OR LOK-RING TYPE JOINTS AS MANUFACTURED BY AMERICAN CAST IRON PIPE CO.; TR FLEX AS MANUFACTURED BY US PIPE, SUPER-LOCK AS MANUFACTURED BY CLOW, BOLT-LOK OR SNAP-LOK AS MANUFACTURED BY GRIFFIN PIPE PRODUCTS, OR EQUAL.
3. CONCRETE PROPERTIES SHALL BE AS FOLLOWS:
   CONCRETE COMPRESSIVE STRENGTH = 4000 PSI
   NOMINAL SLUMP = 4 INCHES
   WATER/CEMENTITOUS MATERIALS RATIO = 0.45 (MAX)
   AIR CONTENT = 6% * 1.5%
   CONCRETE SHALL BE COMPOSED OF CEMENT, WATER, COARSE AGGREGATES, FINE AGGREGATES AND AIR. CEMENT SHALL BE TYPE I/II OR II IN ACCORDANCE WITH ASTM C-150. MATERIAL REQUIREMENTS FOR ALL FINE AND COARSE AGGREGATES SHALL CONFORM TO ASTM C-33. COARSE AGGREGATE SHALL BE SIZE No. 57 OR 67. AN APPROVED CLASS 'F' FLYASH MAY BE SUBSTITUTED FOR AN EQUAL AMOUNT OF CEMENT BY WEIGHT UP TO 25%.
4. ALL EXPOSED CONCRETE CORNERS SHALL BE CHAMFERED 3/4".
5. CONVENTIONAL REINFORCING STEEL SHALL CONFORM TO ASTM A615 GRADE 60 AND SHALL BE PLACED IN ACCORDANCE WITH 'RECOMMENDED PRACTICE FOR PLACING REINFORCING BARS' (LATEST EDITION) AS PUBLISHED BY THE CONCRETE REINFORCING INSTITUTE. SPLICES SHALL BE CLASS 'B' CONFORMING TO THE PROVISIONS OF ACI 318 - "BUILDING CODE REQUIREMENTS FOR REINFORCED CONCRETE".
6. NEOPRENE BEARING PADS SHALL BE FORMED FROM PREVIOUSLY UNVULCANIZED, 100% VIRGIN NEOPRENE, WITH DUROMETER HARDNESS = 50.
7. PILES SHALL BE STRUCTURAL STEEL HP12x53 PILES AND SHALL CONFORM TO THE REQUIREMENTS OF ASTM A36. PILES SHALL BE DRIVEN TO DEPTHS REQUIRED TO OBTAIN AN ULTIMATE BEARING CAPACITY OF NOT LESS THAN TWO TIMES THE DESIGN LOADING OF 30 TONS. PILES SHALL PENETRATE A MINIMUM OF FIFTEEN FEET INTO UNDISTURBED SOIL. IN DRIVING PILES, A METHOD APPROVED BY THE ENGINEER SHALL BE USED WHEREBY THE HEAD OF THE PILE IS NOT DAMAGED. IF REQUESTED BY THE ENGINEER, PILES SHALL BE TESTED TO DETERMINE THE ULTIMATE CAPACITY OF THE PILES. THE METHOD OF LOAD TESTING SHALL CONFORM TO ASTM D1143 AND THE NORTH CAROLINA STATE BUILDING CODE. WHERE PILES ARE EXPOSED, PILES SHALL BE PAINTED AND/OR COATED IN ACCORDANCE WITH THE CITY SPECIFICATIONS.

CITY OF RALEIGH
DEPARTMENT OF PUBLIC UTILITIES
AERIAL PIPE CROSSING
GENERAL NOTES

DWG. NO.	REVISIONS	DATE	REVISIONS	DATE
S-10	D.H.L.	6/16/08		

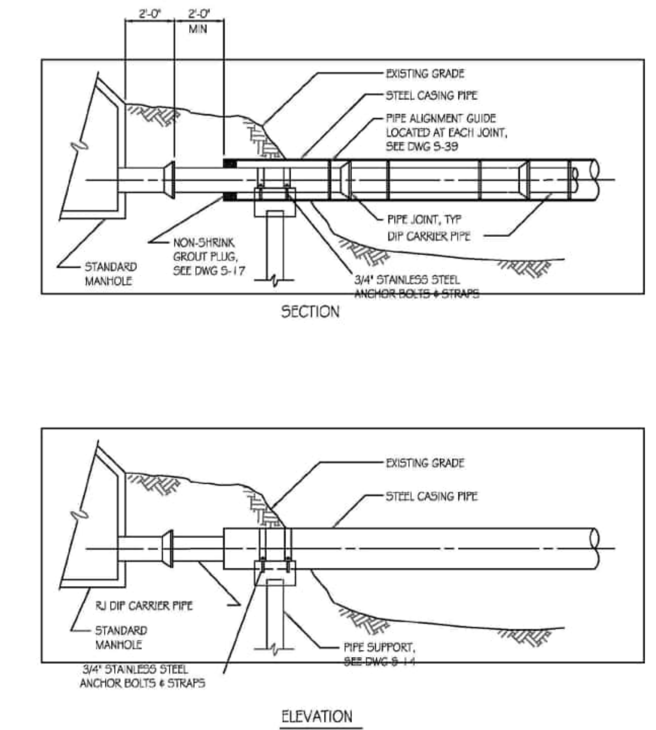

CITY OF RALEIGH
DEPARTMENT OF PUBLIC UTILITIES
AERIAL PIPE CROSSING
TYPICAL PIPE SECTION & ELEVATION

DWG. NO.	REVISIONS	DATE	REVISIONS	DATE
S-13	D.H.L.	6/16/08		

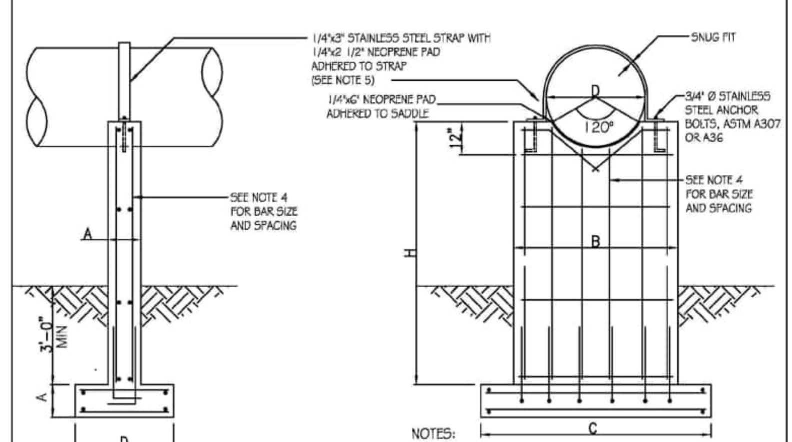

CASING PIPE DIA. "D" (IN.)	"H" (FT.)	THICKNESS "A" (IN.)	PIER WIDTH "B" (FT.)	FOOTING LENGTH "C" (FT.)	FOOTING WIDTH "D" (FT.)
6-12	≤6	12	2'-4"	5'-6"	3'-0"
	8	12	2'-4"	6'-3"	3'-0"
	10	12	2'-4"	6'-8"	3'-0"
	12	12	2'-4"	7'-2"	3'-0"
14-20	≤6	12	3'-0"	8'-0"	3'-0"
	8	12	3'-0"	9'-0"	3'-0"
	10	12	3'-0"	9'-10"	3'-0"
	12	14	3'-0"	10'-6"	3'-0"
22-28	≤6	14	3'-8"	8'-9"	4'-0"
	8	14	3'-8"	10'-0"	4'-0"
	10	14	3'-8"	11'-0"	4'-0"
	12	14	3'-8"	11'-10"	4'-0"
30-36	≤6	18	4'-4"	9'-0"	4'-0"
	8	18	4'-4"	10'-6"	4'-0"
	10	18	4'-4"	11'-6"	4'-0"
	12	18	4'-4"	12'-4"	4'-0"
38-48	≤6	18	5'-4"	9'-6"	5'-0"
	8	18	5'-4"	11'-0"	5'-0"
	10	18	5'-4"	12'-0"	5'-0"
	12	18	5'-4"	12-10"	5'-0"
51-56	≤6	18	6'-4"	9'-10"	5'-0"
	8	18	6'-4"	11'-4"	5'-0"
	10	18	6'-4"	12'-4"	5'-0"
	12	18	6'-4"	13'-2"	5'-0"

NOTES:
1. SHALLOW FOUNDATION DESIGN SHOWN ON THIS DETAIL IS BASED ON THE FOLLOWING PARAMETERS:
   ALLOWABLE SOIL BEARING CAPACITY = 2000 PSF
   CONCRETE COMPRESSIVE STRENGTH = 4000 PSI
   GRADE 60 REINFORCING STEEL
   MAXIMUM STREAM VELOCITY = 10 FT/SEC
   MAXIMUM SUPPORT HEIGHT (H) = 12'-0"
   IF FIELD CONDITIONS REQUIRE ANY DEVIATION FROM THESE PARAMETERS, THE FOUNDATION DESIGN SHALL BE REVIEWED BY THE ENGINEER.
2. IF SUBGRADE AT LOCATION OF SUPPORTS IS DEEMED UNABLE TO WITHSTAND 2000 PSF BEARING PRESSURE, A PILE SUPPORTED FOUNDATION SHALL BE UTILIZED AS PER DRAWING S-15.
3. IF BEDROCK IS ENCOUNTERED WHICH WILL PREVENT 3-FEET MINIMUM COVER OVER FOOTING, DOWELS SHALL BE DRILLED INTO BEDROCK PRIOR TO PLACING FOUNDATION. SEE DRAWING S-17.
4. TWELVE-INCH AND FOURTEEN-INCH THICK PIERS AND FOOTINGS SHALL BE REINFORCED WITH #5 BARS AT 12 INCHES OC IN EACH DIRECTION ON EACH FACE. EIGHTEEN-INCH WIDE PIERS AND FOOTINGS SHALL BE REINFORCED WITH #7 BARS AT 12 INCHES OC IN EACH DIRECTION ON EACH FACE.
5. EIGHTEEN-INCH THICK PIERS SHALL REQUIRE TWO STRAPS OVER THE PIPE INSTEAD OF ONE (AS SHOWN).
6. WHEN CONCRETE SUPPORTS ARE REQUIRED TO BE LOCATED WITHIN A STREAM AND ARE NOT COVERED WITH BACKFILL, SEE DRAWING S-19 FOR MODIFICATIONS TO UPSTREAM FACE OF SUPPORT.

CITY OF RALEIGH
DEPARTMENT OF PUBLIC UTILITIES
AERIAL PIPE CROSSING
CONCRETE PIER DETAIL

DWG. NO.	REVISIONS	DATE	REVISIONS	DATE
S-14	D.H.L.	6/16/08		

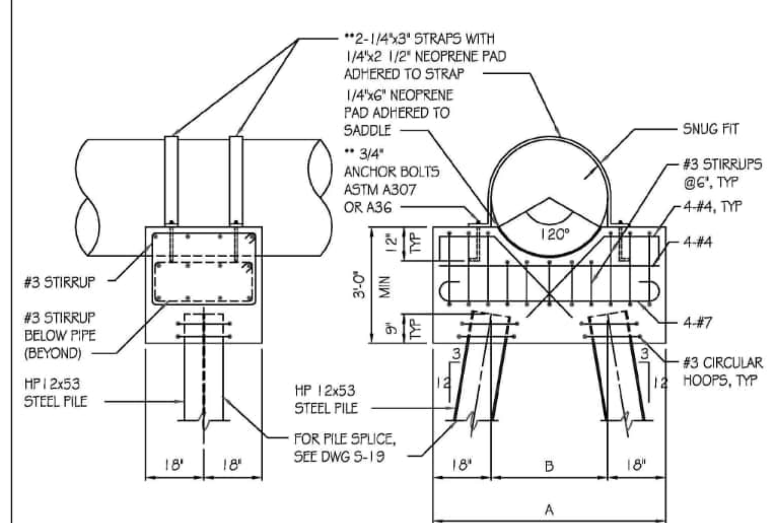

WIDTH OF PILE CAP		
CASING PIPE DIAMETER (IN.)	TOTAL WIDTH "A" (FT.)	PILE SPACING "B" (FT.)
≤ 36	6'-0"	3'-0"
38-42	6'-6"	3'-6"
45-51	7'-3"	4'-3"
54-60	8'-0"	5'-0"

NOTES:
1. PILE SUPPORTED FOUNDATION DESIGN SHOWN ON THIS DETAIL IS BASED UPON THE FOLLOWING PARAMETERS:
   MINIMUM CAPACITY OF HP12x53 PILE = 30 TONS
   CONCRETE COMPRESSIVE STRENGTH = 4000 PSI
   GRADE 60 REINFORCING STEEL
   MAXIMUM STREAM VELOCITY = 10 FT/SEC
   IF FIELD CONDITIONS REQUIRE ANY DEVIATION FROM THESE PARAMETERS, FOUNDATION DESIGN SHALL BE REVIEWED BY THE PROJECT ENGINEER.
2. LENGTH OF PILES SHALL BE AS REQUIRED TO DEVELOP 30 TON CAPACITY BY EITHER END BEARING, FRICTION OR A COMBINATION OF END BEARING AND FRICTION. AS A MINIMUM, PILES SHALL BE DRIVEN AT LEAST 15 FEET INTO UNDISTURBED SOIL.

**3. ANCHOR BOLTS AND STRAPS SHALL BE STAINLESS STEEL.

CITY OF RALEIGH
DEPARTMENT OF PUBLIC UTILITIES
AERIAL PIPE CROSSING
PILE CAP DETAIL

DWG. NO.	REVISIONS	DATE	REVISIONS	DATE
S-15	D.H.L.	6/16/08		

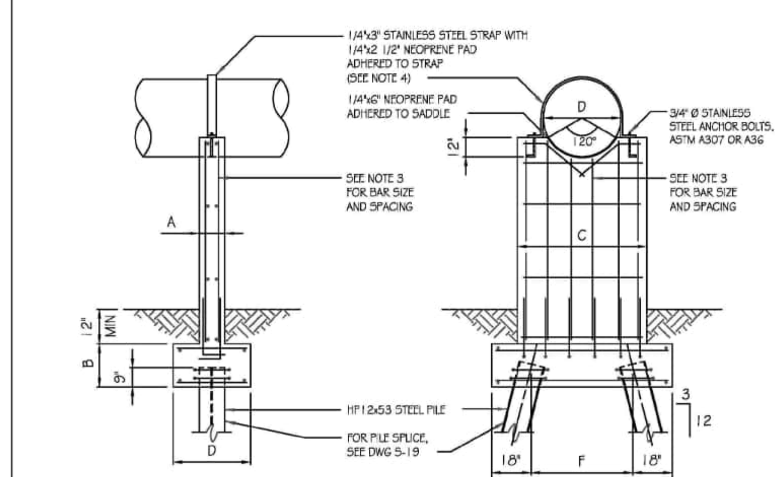

NOTES:
1. PILE SUPPORTED PIER FOUNDATION DESIGN SHOWN ON THIS DETAIL IS BASED ON THE FOLLOWING PARAMETERS:
   MINIMUM CAPACITY OF HP12x53 PILE = 30 TONS
   CONCRETE COMPRESSIVE STRENGTH = 4000 PSI
   GRADE 60 REINFORCING STEEL
   MAXIMUM STREAM VELOCITY = 10 FT/SEC
   IF FIELD CONDITIONS REQUIRE ANY DEVIATION FROM THESE PARAMETERS, THE FOUNDATION DESIGN SHALL BE REVIEWED BY THE ENGINEER.
2. LENGTH OF PILES SHALL BE AS REQUIRED TO DEVELOP 30 TON CAPACITY BY EITHER END BEARING, FRICTION OR A COMBINATION OF END BEARING AND FRICTION. AS A MINIMUM, PILES SHALL BE DRIVEN AT LEAST 15 FEET INTO UNDISTURBED SOIL.
3. TWELVE-INCH AND FOURTEEN-INCH WIDE PIERS SHALL BE REINFORCED WITH #5 BARS AT 12 INCHES OC IN EACH DIRECTION ON EACH FACE. EIGHTEEN-INCH WIDE PIERS SHALL BE REINFORCED WITH #7 BARS AT 12 INCHES OC IN EACH DIRECTION ON EACH FACE. FOOTINGS SHALL BE REINFORCED TYPICALLY TO PIERS.
4. EIGHTEEN-INCH WIDE PIERS SHALL REQUIRE TWO STRAPS OVER THE PIPE INSTEAD OF ONE (AS SHOWN).
5. WHEN CONCRETE SUPPORTS ARE REQUIRED TO BE LOCATED WITHIN A STREAM AND ARE NOT COVERED WITH BACKFILL, SEE DRAWING S-19 FOR MODIFICATIONS TO UPSTREAM FACE OF SUPPORT.

CASING PIPE DIA. "D" (IN.)	PIER THICKNESS "A" (IN.)	FOOTING THICKNESS "B" (IN.)	PIER WIDTH "C" (FT.)	FOOTING WIDTH "D" (FT.)	FOOTING LENGTH "E" (FT.)	PILE SPACING "F" (FT.)
6-12	12	20	2'-4"	3'-0"	6'-0"	3'-0"
14-20	12	20	3'-0"	3'-0"	8'-0"	5'-0"
22-28	18	26	3'-8"	4'-0"	8'-9"	5'-9"
30-36	18	26	4'-4"	4'-0"	9'-0"	6'-0"
38-48	18	26	5'-4"	5'-0"	9'-6"	6'-6"
51-60	18	26	6'-4"	5'-0"	9'-10"	6'-10"

CITY OF RALEIGH
DEPARTMENT OF PUBLIC UTILITIES
AERIAL PIPE CROSSING
PILE SUPPORTED PIER DETAIL

DWG. NO.	REVISIONS	DATE	REVISIONS	DATE
S-16	D.H.L.	6/16/08		

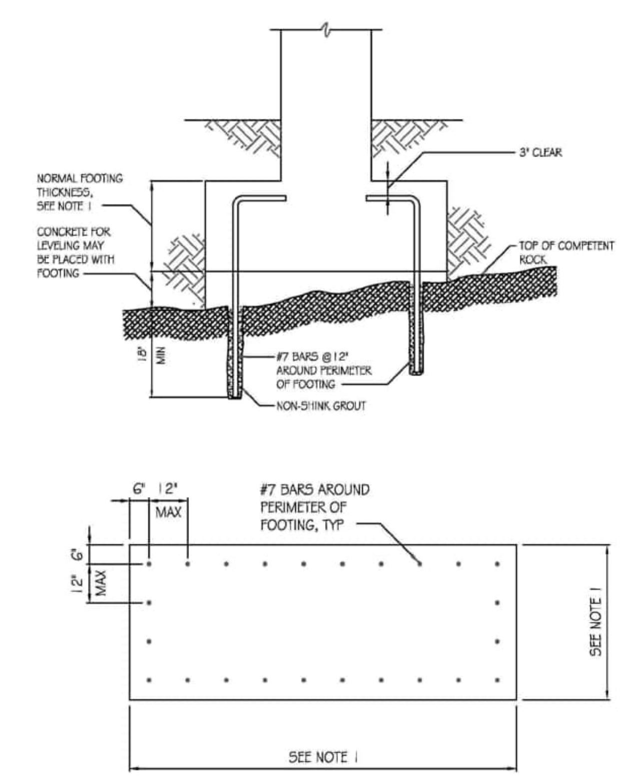

NOTES:
1. GEOMETRY OF FOOTING SHALL MATCH GEOMETRY OF CONCRETE PIERS WITH HEIGHT OF 6 FEET OR LESS AS PER DRAWING S-14.
2. NON-SHRINK GROUT SHALL BE "EUCO-N-S" BY THE EUCLID CHEMICAL COMPANY; "MASTERFLOW 713" BY MASTER BULDERS, OR EQUAL.

CITY OF RALEIGH
DEPARTMENT OF PUBLIC UTILITIES
AERIAL PIPE CROSSING
CONCRETE PIER ON BEDROCK

DWG. NO.	REVISIONS	DATE	REVISIONS	DATE
S-17				

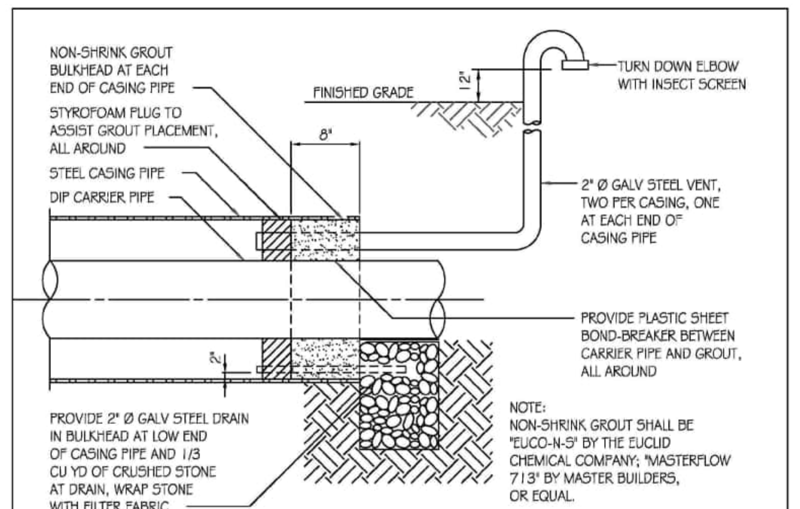

TYPICAL CASING PIPE PLUG

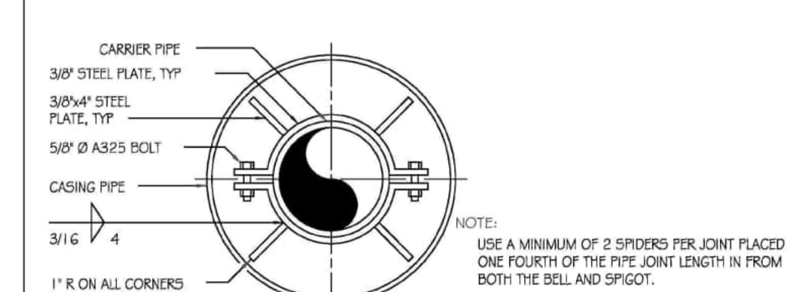

PIPE ALIGNMENT GUIDE

CITY OF RALEIGH
DEPARTMENT OF PUBLIC UTILITIES
AERIAL PIPE CROSSING
CASING PIPE DETAILS

DWG. NO.	REVISIONS	DATE	REVISIONS	DATE
S-18	A.B.B.	4-16-04		
	D.H.L.	6-18-08		

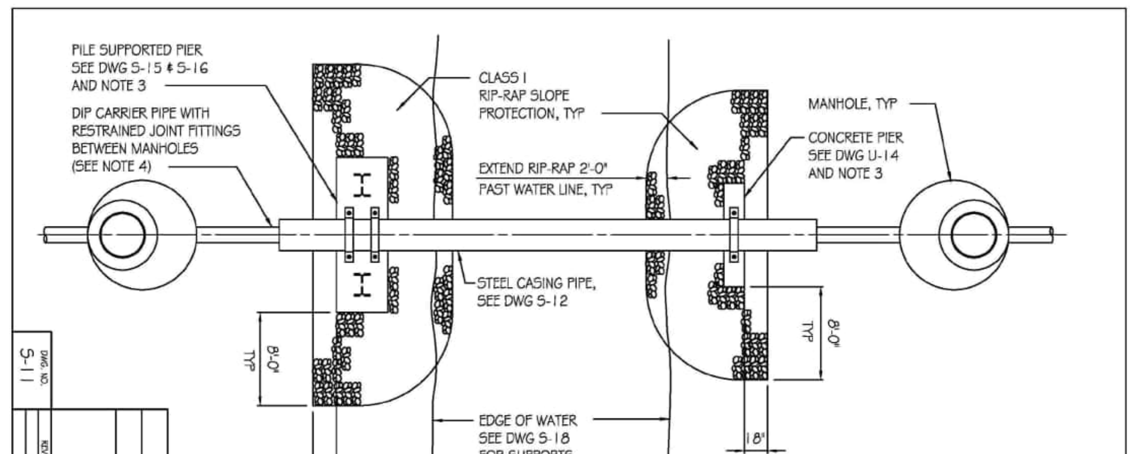

NOTES:
1. RIP RAP FOR SLOPE PROTECTION SHALL BE CLASS I RIP RAP IN ACCORDANCE WITH SECTION 868 OF THE NORTH CAROLINA DEPARTMENT OF TRANSPORTATION'S "STANDARD SPECIFICATIONS FOR ROADS AND BRIDGES".
2. RIP RAP SHALL BE PLACED IN ACCORDANCE WITH DRAWING 868.01 OF THE NORTH CAROLINA DEPARTMENT OF TRANSPORTATION'S "ROADWAY STANDARD DRAWINGS".
3. SUPPORT TYPE FOR PIERS SHALL BE DETERMINED BY ENGINEER BASED ON SUBGRADE CONDITIONS AT SITE. SEE DRAWING S-14 FOR SUBGRADE PARAMETERS FOR EACH TYPE OF FOUNDATION.
4. WHERE DUCTILE IRON PIPE IS USED FOR CARRIER PIPE, DUCTILE IRON CARRIER PIPE SHALL BE INSTALLED UTILIZING 2 PIPE ALIGNMENT GUIDES PER JOINT ONE FOURTH OF THE PIPE JOINT LENGTH IN FROM BOTH THE BELL AND SPIGOT ENDS.

CITY OF RALEIGH
DEPARTMENT OF PUBLIC UTILITIES
AERIAL PIPE CROSSING
TYPICAL PLAN

DWG. NO.	REVISIONS	DATE	REVISIONS	DATE
S-11	A.B.B.	4-16-04		
	D.H.L.	6/16/08		

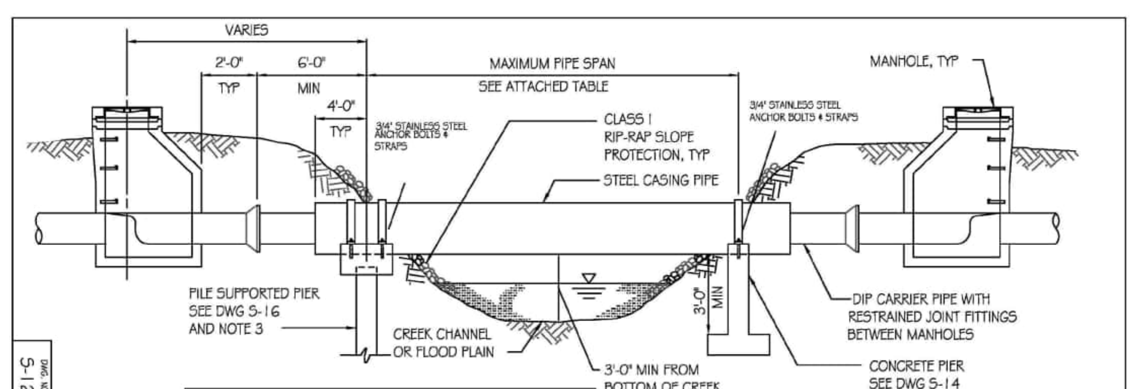

ALLOWABLE SPANS FOR STEEL CASING PIPE			
CARRIER PIPE, DIP DIAMETER (IN.)	CASING PIPE, STEEL DIAMETER (IN.)	MINIMUM CASING PIPE WALL THICKNESS (IN.)	ALLOWABLE SPAN (FT.)
6	14	0.3750	40
8	16	0.3750	45
10	18	0.3750	50
12	20	0.3750	50
14	24	0.3750	55
16	26	0.3750	55
18	30	0.3750	60
20	32	0.3750	60
24	36	0.4375	65
30	42	0.4375	65
36	48	0.500	65
42	56	0.5000	65

NOTES:
1. STEEL PIPE SHALL BE EITHER SPIRAL WELDED OR SMOOTH WALL SEAMLESS WITH A MINIMUM YIELD STRENGTH OF 35,000 PSI. PAINTING AND LINING SHALL BE AS REQUIRED BY THE CITY OF RALEIGH PUBLIC UTILITIES HANDBOOK.
2. DUCTILE IRON PIPE SHALL BE SUPPORTED WITH TWO SPIDERS AT EVERY JOINT WITHIN THE CASING PIPE USING APPROVED PIPE ALIGNMENT GUIDE. SEE DRAWING S-39. ALL JOINTS SHALL BE RESTRAINED JOINT. SEE NOTE 2, DWG S-10.
3. SUPPORT TYPE FOR PIERS SHALL BE DETERMINED BY ENGINEER BASED ON SUBGRADE CONDITIONS AT SITE. SEE DRAWING S-14 FOR SUBGRADE PARAMETERS FOR EACH TYPE OF FOUNDATION. SEE DRAWING S-19 FOR SUPPORTS PLACED WITHIN STREAM.
4. BOTTOM OF PIPE TO BE AT A MINIMUM OF 1' ABOVE THE 25 YEAR FLOOD ELEVATION.

CITY OF RALEIGH
DEPARTMENT OF PUBLIC UTILITIES
AERIAL PIPE CROSSING
STEEL CASING PIPE ELEVATION

DWG. NO.	REVISIONS	DATE	REVISIONS	DATE
S-12	D.H.L.	6/16/08		

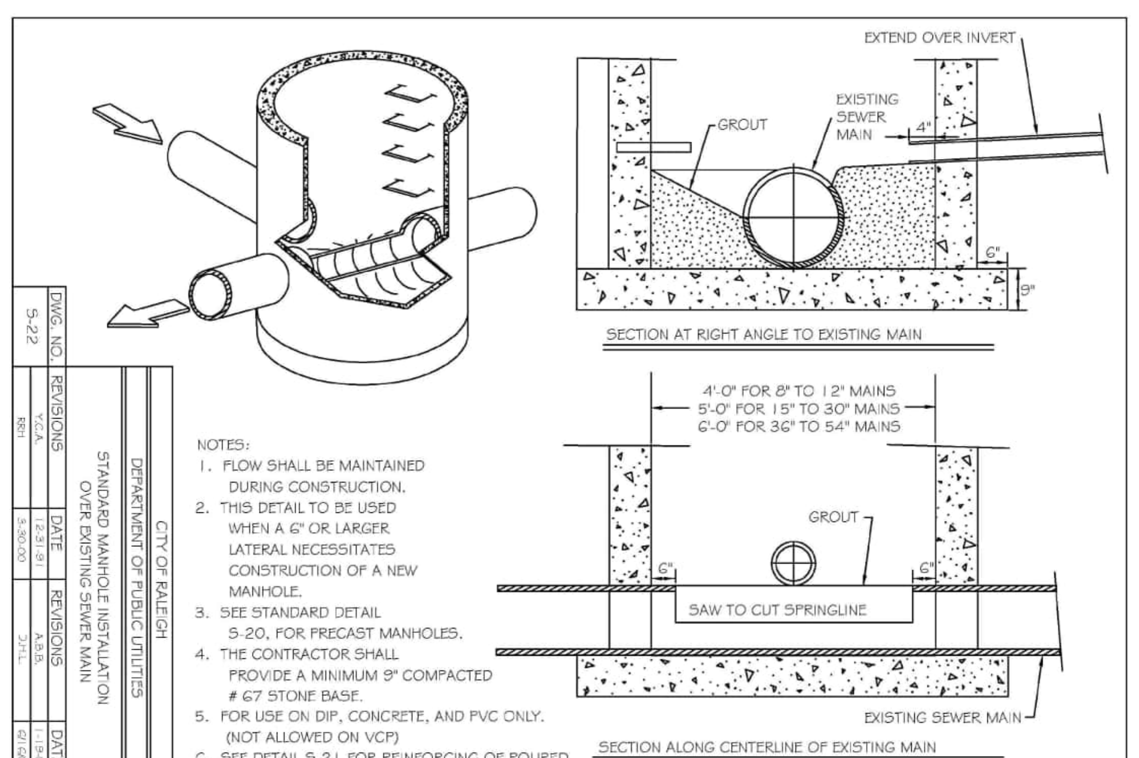

NOTES:
1. FLOW SHALL BE MAINTAINED DURING CONSTRUCTION.
2. THIS DETAIL TO BE USED WHEN A 6" OR LARGER LATERAL NECESSITATES CONSTRUCTION OF A NEW MANHOLE.
3. SEE STANDARD DETAIL S-20, FOR PRECAST MANHOLES.
4. THE CONTRACTOR SHALL PROVIDE A MINIMUM 9" COMPACTED # 67 STONE BASE.
5. FOR USE ON DIP, CONCRETE, AND PVC ONLY. (NOT ALLOWED ON VCP)
6. SEE DETAIL S-21 FOR REINFORCING OF POURED IN-PLACE BASE

CITY OF RALEIGH
DEPARTMENT OF PUBLIC UTILITIES
STANDARD MANHOLE INSTALLATION OVER EXISTING SEWER MAIN

DWG. NO.	REVISIONS	DATE	REVISIONS	DATE
S-22	Y.C.A.	12-31-91	A.B.B.	1-19-05
	RRH	3-30-00	D.H.L.	6/16/08

Public
Water Distribution / Extension System

The City of Raleigh consents to the connection and extension of the City's public water system as shown on this plan. The material and Construction methods used for this project shall conform to the standards and specifications of the City's Public Utilities Handbook.

City of Raleigh
Public Utilities Department Permit # ________

Private
Sewer Collection / Extension System

The City of Raleigh consents to the connection to its public sewer system and extension of the private sewer collection system as shown on this plan. The material and constructions methods used for this project shall conform to the standards and specifications of the City's Public Utilities Handbook.

City of Raleigh
Public Utilities Department Permit # ________

Public
Sewer Collection / Extension System

The City of Raleigh consents to the connection and extension of the City's public sewer system as shown on this plan. The material and Construction methods used for this project shall conform to the standards and specifications of the City's Public Utilities Handbook.

City of Raleigh
Public Utilities Department Permit # ________

FINAL DRAWING - NOT RELEASED FOR CONSTRUCTION

MCADAMS
The John R. McAdams Company, Inc.
2905 Meridian Parkway
Durham, NC 27713

phone 919. 361. 5000
fax 919. 361. 2269
license number: C-0293, C-187

www.mcadamsco.com

CLIENT

ALLIANCE GROUP OF NC, LLC
7208 FALLS OF NEUSE RD, SUITE 101
RALEIGH, NORTH CAROLINA 27615
CONTACT: JACOB ANDERSON
PHONE: 919. 239. 9486

AGNC
BROKERAGE | CONSULTING | PLANNING

PEARCE FARM - PHASES 1-3
CONSTRUCTION DRAWINGS - PACKAGE 1
BURLINGTON MILLS ROAD
TOWN OF ROLESVILLE, NORTH CAROLINA

CID-24-08

NORTH CAROLINA PROFESSIONAL SEAL 22630 ENGINEER WILLIAM T. O'DANIEL
PRELIMINARY - NOT FOR CONSTRUCTION

REVISIONS

NO.	DATE	
1	02. 03. 2025	REVISED PER TOWN, CITY AND COUNTY COMMENTS

PLAN INFORMATION

PROJECT NO.	AGN23001
FILENAME	AGN23001-D1
CHECKED BY	.
DRAWN BY	.
SCALE	N.T.S.
DATE	12. 02. 2024

SHEET

SANITARY SEWER DETAILS

C8.06

X:\Projects\AGN\AGN23001\04-Production\Engineering\Construction Drawings\Current Drawings\AGN23001-D1.dwg, 1/28/2025 1:09:02 PM, Sherrill Williams

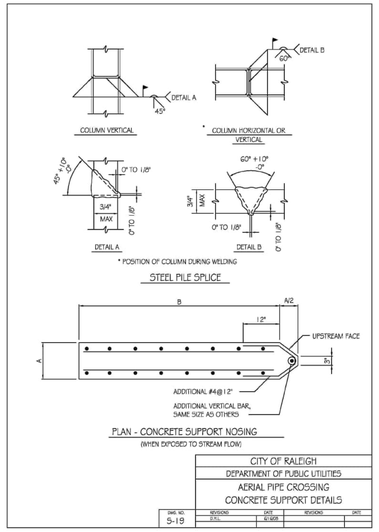

CITY OF RALEIGH
DEPARTMENT OF PUBLIC UTILITIES
AERIAL PIPE CROSSING
CONCRETE SUPPORT DETAILS

DWG. NO.	REVISIONS	DATE	REVISIONS	DATE
S-19	REVISED	6/1/05		

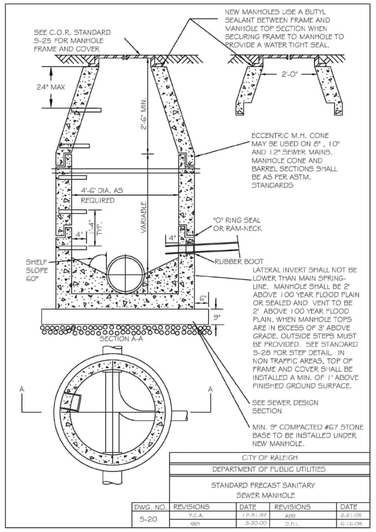

CITY OF RALEIGH
DEPARTMENT OF PUBLIC UTILITIES
STANDARD PRECAST SANITARY SEWER MANHOLE

DWG. NO.	REVISIONS	DATE	REVISIONS	DATE
S-20	Y.C.A.	1-31-97	ABB	2-21-08
	KRH	3-30-00	D.H.L.	6-16-08

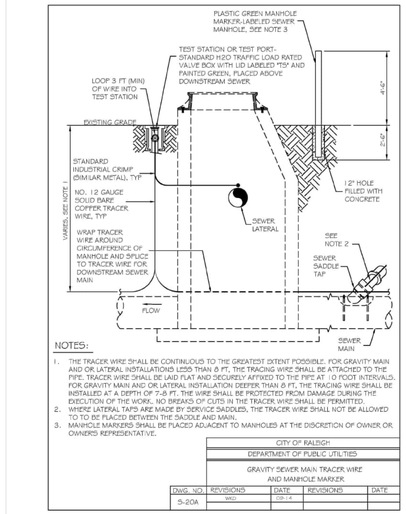

CITY OF RALEIGH
DEPARTMENT OF PUBLIC UTILITIES
GRAVITY SEWER MAIN TRACER WIRE AND MANHOLE MARKER

DWG. NO.	REVISIONS	DATE	REVISIONS	DATE
S-20A	WKD	08-14		

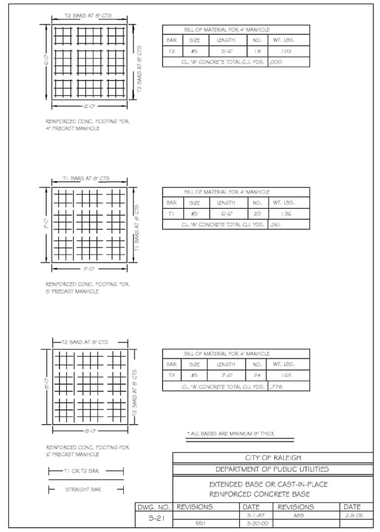

BILL OF MATERIAL FOR 4' MANHOLE

MAR.	SIZE	LENGTH	NO.	WT. LBS.
T2	#5	5'-10"	18	1103
CL. 'A' CONCRETE TOTAL CU. YDS.				.2000

BILL OF MATERIAL FOR 5' MANHOLE

MAR.	SIZE	LENGTH	NO.	WT. LBS.
T1	#5	7'-0"	20	1,316
CL. 'A' CONCRETE TOTAL CU. YDS.				.2611

BILL OF MATERIAL FOR 6' MANHOLE

MAR.	SIZE	LENGTH	NO.	WT. LBS.
T3	#5	7'-10"	24	1,625
CL. 'A' CONCRETE TOTAL CU. YDS.				.3778

CITY OF RALEIGH
DEPARTMENT OF PUBLIC UTILITIES
EXTENDED BASE OR CAST-IN-PLACE REINFORCED CONCRETE BASE

DWG. NO.	REVISIONS	DATE	REVISIONS	DATE
S-21	KRH	3-1-87	ABB	2-8-08
		3-30-00		

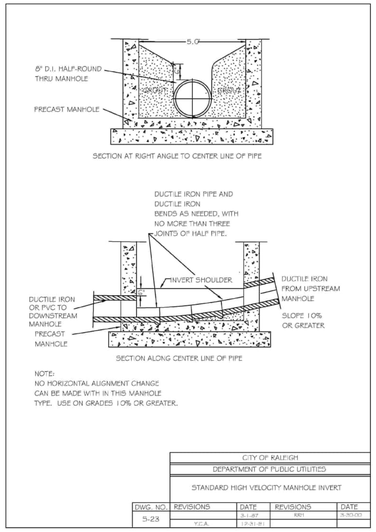

CITY OF RALEIGH
DEPARTMENT OF PUBLIC UTILITIES
STANDARD HIGH VELOCITY MANHOLE INVERT

DWG. NO.	REVISIONS	DATE	REVISIONS	DATE
S-23	Y.C.A.	1-31-97	KRH	5-30-00
		7-31-97		

CITY OF RALEIGH
DEPARTMENT OF PUBLIC UTILITIES
STANDARD SEAL TIGHT MANHOLE WITH VENTED STACK

DWG. NO.	REVISIONS	DATE	REVISIONS	DATE
S-24	D.W.C.	6-7-99	A.B.B.	4-15-04
	KRH	3-30-00	D.H.L.	6/1/05

CITY OF RALEIGH
DEPARTMENT OF PUBLIC UTILITIES
MANHOLE FRAME AND COVER

DWG. NO.	REVISIONS	DATE	REVISIONS	DATE
S-25	KRH	3-1-87	A.B.B.	2-9-05
		3-30-00	D.H.L.	6-18-08

CITY OF RALEIGH
DEPARTMENT OF PUBLIC UTILITIES
MANHOLE FRAME AND WATERTIGHT COVER

DWG. NO.	REVISIONS	DATE	REVISIONS	DATE
S-26	KRH	3-30-00	ABB	6-29-05
			D.H.L.	6/1/06

CITY OF RALEIGH
DEPARTMENT OF PUBLIC UTILITIES
STANDARD SLIP RESISTANT MANHOLE STEP DETAIL

DWG. NO.	REVISIONS	DATE	REVISIONS	DATE
S-28	KRH	3-30-00		

CITY OF RALEIGH
DEPARTMENT OF PUBLIC UTILITIES
STANDARD MANHOLE FRAME AND COVER DETAIL WITHIN PAVED SURFACES

DWG. NO.	REVISIONS	DATE	REVISIONS	DATE
S-29	Y.C.A.	12-31-91	ABB	9-20-04
	KRH	3-30-00	D.H.L.	1-29-07

S-30 | TYPICAL SANITARY SEWER LATERAL CONNECTION | CITY OF RALEIGH DEPARTMENT OF PUBLIC UTILITIES

DWG. NO.	REVISIONS	DATE	REVISIONS	DATE
S-30	KRH	3-30-00		
	D.H.L.	6-29-05		

S-30A | TYPICAL SANITARY SEWER LATERAL TRACER WIRE | CITY OF RALEIGH DEPARTMENT OF PUBLIC UTILITIES

DWG. NO.	REVISIONS	DATE	REVISIONS	DATE
S-30A	WKD	8-1-97		
	KRH	3-30-00		
	D.H.L.	6-29-05		

S-32 | LATERAL SADDLE INSTALLATION DETAIL FOR VCP AND DUCTILE IRON PIPE | CITY OF RALEIGH DEPARTMENT OF PUBLIC UTILITIES

DWG. NO.	REVISIONS	DATE	REVISIONS	DATE
S-32	KRH	3-30-00		
	D.H.L.	6-29-05		

Public
Water Distribution / Extension System

The City of Raleigh consents to the connection and extension of the City's public water system as shown on this plan. The material and Construction methods used for this project shall conform to the standards and specifications of the City's Public Utilities Handbook.

City of Raleigh
Public Utilities Department Permit # _____

Private
Sewer Collection / Extension System

The City of Raleigh consents to the connection to its public sewer system and extension of the private sewer collection system as shown on this plan. The material and constructions methods used for this project shall conform to the standards and specifications of the City's Public Utilities Handbook.

City of Raleigh
Public Utilities Department Permit # _____

Public
Sewer Collection / Extension System

The City of Raleigh consents to the connection and extension of the City's public sewer system as shown on this plan. The material and Construction methods used for this project shall conform to the standards and specifications of the City's Public Utilities Handbook.

City of Raleigh
Public Utilities Department Permit # _____

McADAMS
The John R. McAdams Company, Inc.
2905 Meridian Parkway
Durham, NC 27713

phone 919. 361. 5000
fax 919. 361. 2269
license number: C-0293, C-187

www.mcadamsco.com

CLIENT

ALLIANCE GROUP OF NC, LLC
7208 FALLS OF NEUSE RD, SUITE 101
RALEIGH, NORTH CAROLINA 27615
CONTACT: JACOB ANDERSON
PHONE: 919. 239. 9486

AGNC BROKERAGE | CONSULTING | PLANNING

PEARCE FARM - PHASES 1-3
CONSTRUCTION DRAWINGS - PACKAGE 1
BURLINGTON MILLS ROAD
TOWN OF ROLESVILLE, NORTH CAROLINA

CID-24-08

NORTH CAROLINA PROFESSIONAL ENGINEER SEAL 22630 WILLIAM T. O'DONNELL
NOT FOR CONSTRUCTION

REVISIONS

NO.	DATE	
1	02. 03. 2025	REVISED PER TOWN, CITY AND COUNTY COMMENTS

PLAN INFORMATION

PROJECT NO.	AGN23001
FILENAME	AGN23001-D1
CHECKED BY	.
DRAWN BY	.
SCALE	N.T.S.
DATE	12. 02. 2024

SHEET

SANITARY SEWER DETAILS

C8.07

FINAL DRAWING - NOT RELEASED FOR CONSTRUCTION

X:\Projects\AGN\AGN23001\04-Production\Engineering\Construction Drawings\Current Drawings\AGN23001-D1.dwg, 1/28/2025 1:09:25 PM, Sherrill Williams

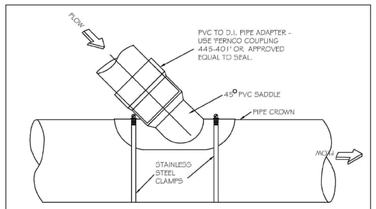

CITY OF RALEIGH
DEPARTMENT OF PUBLIC UTILITIES

LATERAL SADDLE INSTALLATION DETAIL FOR PVC PIPE

DWG. NO.	REVISIONS	DATE	REVISIONS	DATE
S-31		3-1-07		
	RRH	5-30-00		

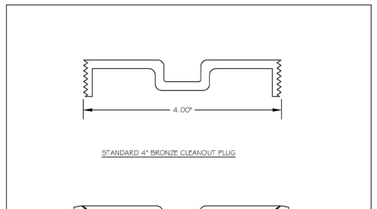

CITY OF RALEIGH
DEPARTMENT OF PUBLIC UTILITIES

4" CLEANOUT PLUG

DWG. NO.	REVISIONS	DATE	REVISIONS	DATE
S-34	D.W.C.	3-1-07	RRH	5-30-00
		3-27-08		

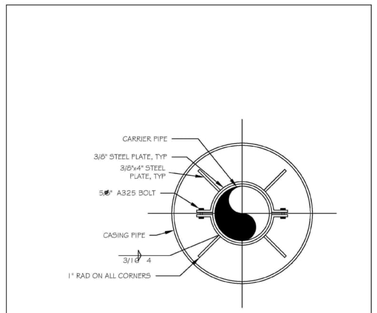

CITY OF RALEIGH
DEPARTMENT OF PUBLIC UTILITIES

PIPE ALIGNMENT GUIDE

DWG. NO.	REVISIONS	DATE	REVISIONS	DATE
S-39	RRH	3-31-00		
	A.B.B.	4-16-04		

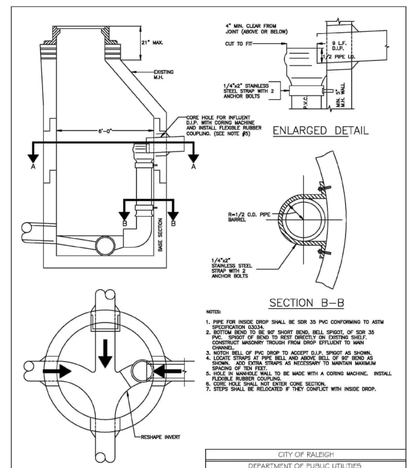

CITY OF RALEIGH
DEPARTMENT OF PUBLIC UTILITIES

INSIDE DROP MANHOLE

DWG. NO.	REVISIONS	DATE	REVISIONS	DATE
S-53	MAB	11-6-13		

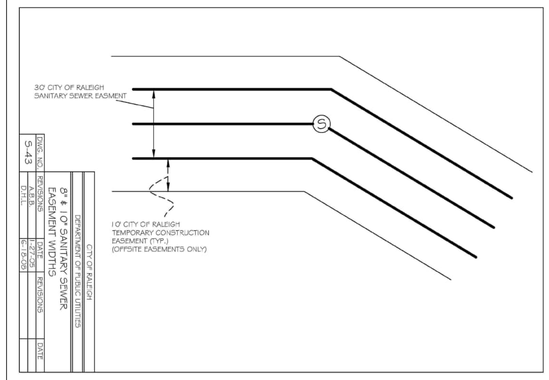

CITY OF RALEIGH
DEPARTMENT OF PUBLIC UTILITIES

30' & 10' SANITARY SEWER EASEMENT WIDTHS

DWG. NO.	REVISIONS	DATE
S-43	A.B.B.	2-29-08
	DTL	2-20-08
		5-30-00

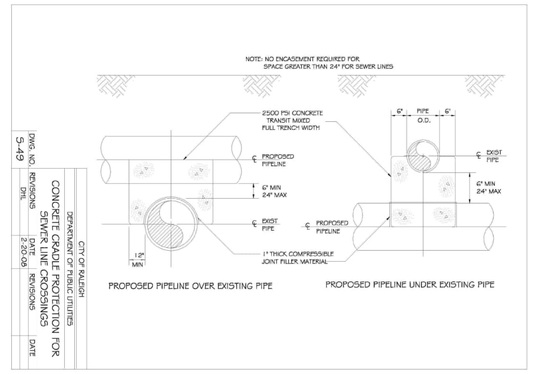

CITY OF RALEIGH
DEPARTMENT OF PUBLIC UTILITIES

CONCRETE PROTECTION FOR SEWER LINE CROSSINGS

DWG. NO.	REVISIONS	DATE
S-49	DTL	2-20-08

Public
Water Distribution / Extension System

The City of Raleigh consents to the connection and extension of the City's public water system as shown on this plan. The material and Construction methods used for this project shall conform to the standards and specifications of the City's Public Utilities Handbook.

City of Raleigh
Public Utilities Department Permit # _____

Private
Sewer Collection / Extension System

The City of Raleigh consents to the connection to its public sewer system and extension of the private sewer collection system as shown on this plan. The material and constructions methods used for this project shall conform to the standards and specifications of the City's Public Utilities Handbook.

City of Raleigh
Public Utilities Department Permit # _____

Public
Sewer Collection / Extension System

The City of Raleigh consents to the connection and extension of the City's public sewer system as shown on this plan. The material and Construction methods used for this project shall conform to the standards and specifications of the City's Public Utilities Handbook.

City of Raleigh
Public Utilities Department Permit # _____

FINAL DRAWING - NOT RELEASED FOR CONSTRUCTION

McAdams
The John R. McAdams Company, Inc.
2905 Meridian Parkway
Durham, NC 27713

phone 919. 361. 5000
fax 919. 361. 2269
license number: C-0293, C-187

www.mcadamsco.com

CLIENT

ALLIANCE GROUP OF NC, LLC
7208 FALLS OF NEUSE RD, SUITE 101
RALEIGH, NORTH CAROLINA 27615
CONTACT: JACOB ANDERSON
PHONE: 919. 239. 9486

AGNC BROKERAGE | CONSULTING | PLANNING

PEARCE FARM - PHASES 1-3
CONSTRUCTION DRAWINGS - PACKAGE 1
BURLINGTON MILLS ROAD
TOWN OF ROLESVILLE, NORTH CAROLINA

CID-24-08

NORTH CAROLINA PROFESSIONAL SEAL 22630 ENGINEER WILLIAM T. O'DANIEL
NOT FOR CONSTRUCTION

REVISIONS

NO.	DATE	
1	02. 03. 2025	REVISED PER TOWN, CITY AND COUNTY COMMENTS

PLAN INFORMATION

PROJECT NO.	AGN23001
FILENAME	AGN23001-D1
CHECKED BY	.
DRAWN BY	.
SCALE	N.T.S.
DATE	12. 02. 2024

SHEET

SANITARY SEWER DETAILS
C8.08

X:\Projects\AGN\AGN23001\04-Production\Engineering\Construction Drawings\Current Drawings\AGN23001-D1.dwg, 1/28/2025 1:09:48 PM, Sherrill Williams

STORMWATER CONTROL MEASURE 'A' CONSTRUCTION SPECIFICATIONS

GENERAL NOTES

1. PRIOR TO CONSTRUCTION, ANY DISCREPANCIES IN THE PLANS AND NOTES SHALL BE BROUGHT TO THE DESIGN ENGINEER'S ATTENTION IMMEDIATELY. IF THE CONTRACTOR, IN THE COURSE OF WORK, FINDS ANY DISCREPANCIES IN THE PLANS OR NOTES GIVEN BY THE PROJECT ENGINEER, IT SHALL BE THEIR DUTY TO IMMEDIATELY INFORM THE PROJECT ENGINEER IN WRITING. ANY WORK DONE AFTER SUCH A DISCOVERY, UNTIL AUTHORIZED, WILL BE AT THE CONTRACTOR'S RISK.
2. THE CONTRACTOR SHALL OBTAIN ALL NECESSARY LICENSES AND PERMITS REQUIRED TO COMPLETE THE WORK INCLUDED IN THE CONTRACT DOCUMENTS AT THE CONTRACTOR'S EXPENSE.
3. IT IS THE CONTRACTOR'S RESPONSIBILITY TO VERIFY THAT THEY AND THEIR SUBCONTRACTORS HAVE THE CORRECT AND MOST UP-TO-DATE PLANS AVAILABLE.
4. THE PROJECT WILL MEET ALL RELEVANT DESIGN REQUIREMENTS IN THE NCDEQ MANUAL AND THE TOWN OF ROLESVILLE REGULATIONS AND STANDARDS.
5. THE DESIGN ENGINEER OR THEIR REPRESENTATIVE SHALL BE ON SITE FOR THE INSTALLATION OF ESSENTIAL ELEMENTS OF THE PRINCIPAL SPILLWAY INCLUDING BUT NOT LIMITED TO THE ANTI-FLOAT BLOCK, RISER, CONCRETE COLLAR, CONCRETE CRADLE, AND THE OUTLET BARREL. THE CONTRACTOR SHALL NOTIFY THE DESIGN ENGINEER 72 HOURS PRIOR TO INSTALLATION OF THESE ITEMS TO ENSURE THAT A REPRESENTATIVE CAN BE ON-SITE. PHOTOGRAPHS OF THESE ITEMS MUST BE TAKEN PRIOR TO BACKFILLING FOR USE IN THE AS-BUILT PHASE. IF THE CONTRACTOR INSTALLS THESE WITHOUT THE ENGINEER OR ENGINEER'S REPRESENTATIVE ON-SITE, THEN THE ELEMENTS SHALL BE UNCOVERED FOR INSPECTION AT THE CONTRACTOR'S EXPENSE.
6. THE FINAL CERTIFICATION FOR THIS FACILITY WILL INCLUDE A CERTIFICATION BY THE ON-SITE GEOTECHNICAL ENGINEER THAT THE PROJECT WAS CONSTRUCTED PER THE APPROVED PLANS. IT IS THE RESPONSIBILITY OF THE CONTRACTOR TO COORDINATE WITH THE ON-SITE GEOTECHNICAL ENGINEER FOR OBSERVATION AND TESTING SUCH THAT THE ON-SITE GEOTECHNICAL ENGINEER CAN CERTIFY THE CONSTRUCTION OF THE DAM EMBANKMENT AND SPILLWAY. THIS CERTIFICATION MUST ADDRESS THE TESTING FOR MATERIALS AND COMPACTION OF THE DAM EMBANKMENT AND SPILLWAY.
7. ALL CONSTRUCTION ACTIVITY RELATED TO THE PROPOSED STORMWATER CONTROL MEASURE SHALL BE PER THE DETAILS AND SPECIFICATIONS SHOWN IN THESE DRAWINGS. SOILS, COMPACTION, AND OTHER MISCELLANEOUS DETAILS AND SPECIFICATIONS MAY BE MODIFIED PER THE RECOMMENDATIONS OF THE ON-SITE GEOTECHNICAL ENGINEER. HOWEVER, PRIOR TO IMPLEMENTATION, THE DESIGN ENGINEER SHALL BE NOTIFIED OF ANY DEVIATION FROM THESE DESIGN DRAWINGS, INCLUDING SHOP DRAWINGS FOR ANY PROPOSED MODIFICATION.
8. DURING THE INITIAL STAGES OF CONSTRUCTION, THE STORMWATER CONTROL MEASURE MAY BE USED AS A SEDIMENT BASIN FOR EROSION CONTROL PURPOSES. IF SO, THE CONTRACTOR SHALL FOLLOW THE GENERAL CONSTRUCTION SEQUENCE BELOW:
   A. THE CONTRACTOR SHALL CONSTRUCT THE ENTIRE FACILITY (PERMANENT OUTLET STRUCTURE, DAM, ETC.) WITH THE EXCEPTION OF THE INTERIOR FINE GRADING FOR THE FACILITY. THE INTERIOR FINE GRADING WILL BE CONSTRUCTED ONCE THE EROSION CONTROL PHASE IS COMPLETE.
   B. THE TEMPORARY DRAWDOWN RISER (OR SKIMMER) SHALL BE CONNECTED TO THE PERMANENT 6"Ø DIP DRAIN PIPE.
   C. ONCE THE UPSTREAM DRAINAGE AREA IS STABILIZED AND THE EROSION CONTROL INSPECTOR APPROVES THE REMOVAL OF THE SEDIMENT BASIN, THE CONTRACTOR SHALL REMOVE THE TEMPORARY DRAWDOWN RISER (OR SKIMMER) AND CLEAN OUT THE BASIN IN ACCORDANCE WITH EROSION CONTROL STANDARD PRACTICES. ALL SEDIMENT, TRASH, ETC. SHALL BE DISPOSED OF PROPERLY (I.E. PLACED IN A LANDFILL) AND NOT STOCKPILED IN AN AREA WHERE WATER QUALITY COULD BE ADVERSELY AFFECTED.
   D. ONCE THE BASIN IS CLEANED OUT, AND ALL EROSION CONTROL DEVICES REMOVED, THE CONTRACTOR SHALL CONSTRUCT THE INTERIOR GRADING SHOWN ON THIS SHEET.
   E. ONCE THE GRADING IS COMPLETE, THE CONTRACTOR SHALL REQUEST AN ON-SITE INSPECTION AND AN AS-BUILT SURVEY PRIOR TO INSTALLATION OF THE STORMWATER CONTROL MEASURE PLANTS. IF THE CONTRACTOR PLANTS THE PROPOSED VEGETATION PRIOR TO AN AS-BUILT SURVEY (AND SUBSEQUENT APPROVAL), ANY CHANGES TO THE GRADING / RE-PLANTING OF PLANTS WILL BE AT THE CONTRACTOR'S EXPENSE.
   F. ONCE THE ENGINEER HAS APPROVED THE AS-BUILT GRADING, THE CONTRACTOR SHALL PLANT THE PROPOSED STORMWATER CONTROL MEASURE PLANTS SHOWN ON THE LANDSCAPE PLAN FOR THE FACILITY. AFTER COMPLETION OF THE PLANTING, THE LANDSCAPE CONTRACTOR SHALL PROVIDE A LETTER TO THE ENGINEER CERTIFYING THAT THE PLANTS HAVE BEEN INSTALLED PER THE APPROVED STORMWATER CONTROL MEASURE PLANTING PLAN.
9. ALL OSHA REQUIREMENTS FOR EXCAVATIONS (SHORING, DEPTH, ETC.) ARE THE RESPONSIBILITY OF THE CONTRACTOR. IF REQUIRED, THE CONTRACTOR SHALL PROVIDE AN EXCAVATION PLAN TO BE SEALED BY A NC P.E. IT IS THE RESPONSIBILITY OF THE CONTRACTOR TO DETERMINE IF AN EXCAVATION PLAN IS REQUIRED. THE JOHN R. MCADAMS COMPANY ASSUMES NO RESPONSIBILITY FOR ANY EXCAVATION DESIGN RELATED TO SAFETY OR OSHA REQUIREMENTS.
10. ON-SITE GEOTECHNICAL ENGINEER SHALL DETERMINE THE IN-SITU SOIL INFILTRATION RATE OF THE STORMWATER CONTROL MEASURE BOTTOM. BASED ON THE RESULTS, THE DESIGN ENGINEER SHALL DETERMINE IF A LINER WILL BE NEEDED TO MAINTAIN A PERMANENT POOL. UPON DETERMINATION OF HIGHLY PERMEABLE SOILS AND THE SEASONAL HIGH WATER TABLE OUTSIDE OF THE ACCEPTABLE RANGE, THE DESIGN ENGINEER WILL PROVIDE SPECIFICATIONS FOR THE LINER.
11. IT IS ANTICIPATED THAT DEWATERING WILL BE NECESSARY IN THE EXCAVATION AREAS (E.G. - EMBANKMENT SUB GRADE, INTERIOR PORTIONS OF THE STORMWATER CONTROL MEASURE, AND KEY TRENCH). THEREFORE, THE CONTRACTOR SHALL FURNISH, INSTALL, OPERATE, AND MAINTAIN ANY PUMPING EQUIPMENT, ETC. NEEDED FOR REMOVAL OF WATER FROM VARIOUS PARTS OF THE STORMWATER CONTROL MEASURE SITE. DURING PLACEMENT OF FILL WITHIN THESE AREAS, THE CONTRACTOR SHALL KEEP THE WATER LEVEL BELOW THE BOTTOM OF THE EXCAVATION / CONSTRUCTION AREAS. THE MANNER TO WHICH THE WATER IS REMOVED SHALL BE SUCH THAT THE EXCAVATION BOTTOM AND SIDE SLOPES ARE STABLE, WITH NO SEDIMENT DISCHARGED FROM THE SITE (I.E. PUMPED WATER MAY NEED TO BE DIRECTED TO AN APPROVED EROSION CONTROL DEVICE PRIOR TO DISCHARGE).
12. PRIOR TO TOPSOIL INSTALLATION, THE CONTRACTOR SHALL SCARIFY THE TOP 2-3" OF THE BERM SECTION TO PROMOTE BONDING OF THE TOPSOIL WITH THE COMPACTED FILL. THE TOPSOIL DEPTH SHALL RANGE FROM 3-4" ON THE DAM EMBANKMENT AND AQUATIC SHELF. PLEASE NOTE THE TOPSOIL SHALL BE AMENDED AS DIRECTED BY A LANDSCAPE PROFESSIONAL PRIOR TO INSTALLATION ON THE EMBANKMENT AND AQUATIC SHELF.
13. THE CONTRACTOR SHALL PROVIDE A ONE YEAR WARRANTY PERIOD FOR ALL PLANTINGS IN THE STORMWATER CONTROL MEASURE.
14. THE CONTRACTOR SHALL REFER TO THE LANDSCAPING PLAN FOR THE PERMANENT PLANTING PLAN/SCHEDULE FOR THIS FACILITY. CONTRACTOR SHALL COORDINATE WITH A LANDSCAPE PROFESSIONAL REGARDING SCHEDULING FOR PLANT INSTALLATION. PLEASE NOTE THAT NO TREES/SHRUBS OF ANY TYPE MAY BE PLANTED ON FILL AREAS OF THE PROPOSED DAM EMBANKMENT.
15. RETAINING WALL ALIGNMENT SHOWN ON THESE PLANS DEPICTS THE LOCATION OF THE FRONT FACE OF THE RETAINING WALL AT THE BOTTOM.
16. RETAINING WALL IS TO BE A DESIGN-BUILD PROJECT BY THE CONTRACTOR. IT SHALL BE THE CONTRACTOR'S RESPONSIBILITY TO OBTAIN FINAL CONSTRUCTION DRAWINGS FROM A REGISTERED PROFESSIONAL ENGINEER AND GAIN ALL REQUIRED PERMITS NECESSARY FOR THE CONSTRUCTION OF THE RETAINING WALL.
17. RETAINING WALL SHALL BE ASSUMED TO BE BACKFILLED WITH OFF-SITE BORROW MATERIAL OR PROCESSED FILL UNLESS CONTRACTOR CAN PROVIDE OWNER WITH CONFIRMATION FROM THE GEOTECHNICAL ENGINEER AND THE RETAINING WALL DESIGNER THAT READILY AVAILABLE ON-SITE SOILS CAN BE USED.
18. TOP AND BOTTOM OF WALL ELEVATIONS REFERENCED ON THESE PLANS IDENTIFY FINISHED GRADE ELEVATIONS ONLY. THE EXTENT THAT THE RETAINING WALL WILL BE EXTENDED BELOW GRADE TO THE FOOTING SHALL BE IDENTIFIED ON THE RETAINING WALL CONSTRUCTION DRAWINGS.
19. ON-SITE GEOTECHNICAL ENGINEER SHOULD BE GIVEN AN OPPORTUNITY TO REVIEW ALL RETAINING WALL PLANS AND DESIGNS RELEVANT TO GEOTECHNICAL CONSIDERATIONS PRIOR TO FINAL DESIGN OF THE WALLS.

OUTLET STRUCTURE MATERIAL SPECIFICATIONS

1. THE 48"Ø RCP OUTLET BARREL SHALL BE CLASS III O-RING RCP, MODIFIED BELL AND SPIGOT, MEETING THE REQUIREMENTS OF ASTM C76-LATEST. THE PIPES SHALL HAVE SINGLE OFFSET JOINTS MEETING ASTM C-443-LATEST.
2. THE STRUCTURAL DESIGN FOR THE 6' X 6' (INTERNAL DIMENSIONS) RISER BOX WITH EXTENDED BASE SHALL BE BY OTHERS. PRIOR TO ORDERING THE STRUCTURES, THE CONTRACTOR SHALL PROVIDE, TO THE DESIGN ENGINEER FOR REVIEW, SHOP DRAWINGS AND SUPPORTING STRUCTURAL CALCULATIONS SEALED BY A P.E. REGISTERED IN NORTH CAROLINA DEMONSTRATING THE PERTINENT VERTICAL LOADS ARE SUPPORTED BY THE CONCRETE RISER STRUCTURE.
3. THE RISER BOX OUTLET STRUCTURE SHALL BE PROVIDED WITH STEPS 16" ON CENTER. STEPS SHALL BE PROVIDED ON THE INNER WALL OF THE RISER BOX. STEPS SHALL BE IN ACCORDANCE WITH NCDOT STD. 840.66. PLEASE REFER TO SHEET C9.01 FOR LOCATION OF THE RISER STEPS. NOTE THE STEPS SHALL LINE UP WITH THE ACCESS HATCH OF THE TRASH RACK.
4. THE CONCRETE ANTI-FLOTATION BLOCK SHALL BE CAST-IN-PLACE. STEEL REINFORCEMENT AND CONNECTION TO THE RISER SHALL BE PROVIDED IN ACCORDANCE WITH THE DETAIL ON SHEET C9.02. THE CONTRACTOR SHALL ENSURE THE WEIGHT OF THE ENTIRE RISER STRUCTURE IS GREATER THAN OR EQUAL TO 47,241 LBS.
5. THE RISER BOX JOINTS SHALL BE SEALED USING BUTYL RUBBER SEALANT CONFORMING TO ASTM-C990-LATEST. IF NECESSARY, THE CONTRACTOR SHALL INCORPORATE A WATERSTOP INTO THE RISER BOX JOINT TO ENSURE A WATERTIGHT CONNECTION. THE CONTRACTOR SHALL PARGE JOINTS ON BOTH THE INSIDE AND OUTSIDE WITH NON-SHRINK GROUT AND INSTALL GALVANIZED STEEL STRAPS PER DETAIL ON SHEET C9.01.
6. PRIOR TO ORDERING, THE CONTRACTOR SHALL SUBMIT TRASH RACK SHOP DRAWINGS TO THE ENGINEER FOR REVIEW. CONTRACTOR SHALL ENSURE THAT AN ACCESS HATCH IS PROVIDED ON THE TRASH RACK (SEE DETAIL SHEET C9.01 FOR LOCATION) THAT WILL ALLOW FOR FUTURE MAINTENANCE ACCESS. NOTE THE ACCESS HATCH SHALL LINE UP WITH THE ACCESS STEPS AFTER INSTALLATION.
7. ALL POURED CONCRETE SHALL MEET THE FOLLOWING SPECIFICATIONS UNLESS OTHERWISE NOTED:

   -MINIMUM 3000 PSI (28 DAY)
   -SLUMP = 3" - 5"
   -ENTRAINED AIR = 5% - 7%

   PLEASE NOTE NO CONCRETE SHALL BE POURED WHEN THE AMBIENT AIR TEMPERATURES ARE EXPECTED TO BE ABOVE 85°F OR BELOW 40°F. CAST-IN-PLACE CONCRETE SHALL BE "WET CURED" AFTER FINISHING FOR A MINIMUM OF 48 HOURS.

   CAST-IN-PLACE CONCRETE TO BE VIBRATED AS NECESSARY.

   ON-SITE GEOTECHNICAL ENGINEER TO TEST AND CERTIFY ALL POURED CONCRETE MEETS THE ABOVE SPECIFICATIONS. CONCRETE CYLINDERS FOR TESTING TO BE OBTAINED AT TIME OF POURING OF CAST-IN-PLACE STRUCTURES.
8. GEOTEXTILE FABRIC FOR THE 48"Ø RCP OUTLET BARREL JOINTS SHALL BE MIRAFI 180N OR ENGINEER APPROVED EQUAL (NON-WOVEN FABRIC).
9. STORMWATER CONTROL MEASURE EMERGENCY DRAWDOWN IS VIA AN 6"Ø PLUG VALVE. THE VALVE SHALL BE A M&H STYLE 1820 ECCENTRIC VALVE OR APPROVED EQUAL. THIS VALVE IS IN ACCORDANCE WITH AWWA C-517, AND SHALL BE OPERABLE FROM TOP OF OUTLET STRUCTURE VIA A HAND WHEEL (SEE DETAIL SHEET C9.01). THE CONTRACTOR SHALL PROVIDE A REMOVABLE VALVE WRENCH WITH A HAND WHEEL ON TOP FOR OPERATION OF THE 6"Ø PLUG VALVE.

CONSTRUCTION SEQUENCE

1. PRIOR TO CONSTRUCTION, THE OWNER SHALL OBTAIN A LAND DISTURBING (GRADING) PERMIT AND AN "APPROVAL TO CONSTRUCT" FROM THE TOWN OF ROLESVILLE AND ALL OTHER NECESSARY PERMITS FROM APPLICABLE AGENCIES (E.G. 404 / 401 PERMITS).
2. INSTALL ALL SEDIMENT AND EROSION CONTROL MEASURES PER THE APPROVED SEDIMENT AND EROSION CONTROL PLAN. THE CONTRACTOR SHALL MAINTAIN ALL APPROVED SEDIMENT AND EROSION CONTROL MEASURES THROUGHOUT THE ENTIRE PROJECT, AS REQUIRED. THE CONTRACTOR SHALL RECEIVE APPROVAL FROM THE EROSION CONTROL INSPECTOR, AS REQUIRED BY GOVERNING AGENCIES, PRIOR TO ANY CLEARING.
3. CLEAR AND GRUB AREA WITHIN THE LIMITS OF THE PROPOSED DAM CONSTRUCTION, ADHERING TO THE "BERM AND SOIL COMPACTION" NOTES. ALL TREES AND THEIR ENTIRE ROOT SYSTEMS MUST BE REMOVED FROM THE DAM FOOTPRINT AREA AND BACKFILLED WITH SUITABLE SOIL MATERIAL. THE BACKFILLED AREAS SHALL BE COMPACTED TO THE SAME STANDARDS AS THE DAM EMBANKMENT. THE REMAINING AREA OF THE EMBANKMENT SHALL BE STRIPPED TO A SUITABLE DEPTH AS DIRECTED BY THE ON-SITE GEOTECHNICAL ENGINEER. ANY RESIDUAL SOILS TO BE LEFT IN PLACE MUST BE WELL SCARIFIED TO PROMOTE BONDING OF THE NEW EMBANKMENT FILL. NO EMBANKMENT MATERIAL SHALL BE PLACED FOR THE DAM OR KEY TRENCH UNTIL APPROVAL OF THE DAM SUBGRADE IS OBTAINED FROM THE ON-SITE GEOTECHNICAL ENGINEER.
4. EXCAVATE FOR THE NEW KEY TRENCH ALONG THE CENTERLINE OF THE PROPOSED DAM EMBANKMENT. THE TRENCH SHALL EXTEND A MINIMUM OF 5 FT BELOW EXISTING GRADE OR 2 FT BELOW THE 48"Ø RCP OUTLET BARREL AND SHALL HAVE A MINIMUM BOTTOM WIDTH OF 5 FEET. THE KEY TRENCH SIDESLOPES SHALL BE A MINIMUM OF 1:1 (H:V). WHEN EXCAVATING THE KEY TRENCH, IF ANY DEBRIS IS ENCOUNTERED TO AN EXTENT THAT SUCH DEBRIS MAY EXIST IN OTHER INSITU PORTIONS OF THE DAM EMBANKMENT, IT SHOULD ALSO BE REMOVED. THE KEY TRENCH SHALL BE COMPACTED TO THE SAME SPECIFICATION LISTED IN ITEM 4 OF THE "BERM AND SOIL COMPACTION SPECIFICATIONS" NOTES. DEPENDING UPON ON-SITE SOIL CONDITIONS ENCOUNTERED DURING EXCAVATION, THE ON-SITE GEOTECHNICAL ENGINEER MAY VARY THE DEPTH AND DIMENSIONS OF THE KEY TRENCH AS DEEMED NECESSARY. THE ON-SITE GEOTECHNICAL ENGINEER SHALL RETAIN DOCUMENTATION OF ANY VARIATION FOR FUTURE AS-BUILT SUBMITTALS TO THE TOWN OF ROLESVILLE.
5. BEGIN PLACEMENT OF BACKFILL WITHIN THE KEY TRENCH. THE KEY TRENCH SHALL BE COMPACTED TO THE SPECIFICATIONS LISTED IN ITEM 4 OF THE "BERM AND SOIL COMPACTION SPECIFICATIONS" NOTES. THE KEY TRENCH SHALL BE TESTED PER THE SPECIFICATIONS LISTED IN THAT SECTION.
6. CONTRACTOR SHALL GIVE THE DESIGN ENGINEER A MINIMUM OF 72 HOURS NOTICE PRIOR TO THE INSTALLATION OF THE SPILLWAY.
7. PRIOR TO INSTALLATION, SUBGRADE CONDITIONS ALONG THE SPILLWAY PIPES SHOULD BE EVALUATED BY THE ON-SITE GEOTECHNICAL ENGINEER TO ASSESS WHETHER SUITABLE BEARING CONDITIONS EXIST AT THE SUBGRADE LEVEL. SHOULD SOFT OR OTHERWISE UNSUITABLE CONDITIONS BE ENCOUNTERED ALONG THE PIPE ALIGNMENTS, THESE MATERIALS SHOULD BE UNDERCUT AS DIRECTED BY THE GEOTECHNICAL ENGINEER. THE UNDERCUT MATERIALS SHALL BE REPLACED WITH ADEQUATELY COMPACTED STRUCTURAL FILL, LEAN CONCRETE OR FLOWABLE FILL AS DIRECTED BY THE ON-SITE GEOTECHNICAL ENGINEER.
8. IN ORDER TO HELP PROTECT THE SOIL SUBGRADE FROM DETERIORATION (DUE TO EXPOSURE, RAINFALL, SEEPAGE, AND RUNOFF) BEFORE THE CRADLE CAN BE POURED, IT IS STRONGLY RECOMMENDED THAT A 3" TO 4" THICK CONCRETE MUD MAT BE POURED OVER THE SUBGRADE ONCE IT IS APPROVED BY THE ON-SITE GEOTECHNICAL ENGINEER. THE MUD MAT WILL ALSO PROVIDE BEARING FOR THE BLOCKS THAT TEMPORARILY SUPPORT THE SPILLWAY PIPE UNTIL THE CRADLE CAN BE POURED. THE METHOD OF BLOCK SUPPORT FOR THE PIPE PROPOSED BY THE CONTRACTOR SHOULD BE SUBMITTED TO THE JOHN R. MCADAMS COMPANY FOR REVIEW.
9. BEGIN CONSTRUCTION OF THE NEW EMBANKMENT. FILL MATERIALS SHALL BE PLACED IN MAXIMUM 8" THICK LIFTS PRIOR TO COMPACTION, UNLESS DIRECTED OTHERWISE BY THE ON-SITE GEOTECHNICAL ENGINEER. FILL LIFTS SHALL BE CONTINUOUS OVER THE ENTIRE LENGTH OF FILL. IF IT IS NECESSARY, THE EMBANKMENT FILL MATERIAL WILL BE OVERBUILT IN HORIZONTAL LIFTS AND CUT BACK TO FINAL GRADE IN ORDER TO ACHIEVE PROPER COMPACTION.
10. AS CONSTRUCTION OF THE EMBANKMENT MOVES FORWARD, IT WILL BE NECESSARY TO INSTALL THE CONCRETE CRADLE. SEE NOTE ON CRADLE DETAIL (SHEET C9.02). THE PROPOSED STRUCTURAL FILL MATERIAL SHALL BE UTILIZED AS THE FORMWORK FOR THE CONCRETE CRADLE. THE STRUCTURAL FILL SHOULD BE INSTALLED AND COMPACTED UP TO THE TOP OF CONCRETE CRADLE ELEVATION. ONCE THE STRUCTURAL FILL REACHES THE NEXT DOWNSTREAM JUNCTION BOX OR HEADWALL AND IS COMPACTED TO THE ELEVATION OF THE TOP OF THE CONCRETE CRADLE, EXCAVATE THE CONCRETE CRADLE TRENCH PER THE PROVIDED DETAILS AND CONSTRUCT THE CONCRETE CRADLE AS PER THE PROVIDED CONCRETE CRADLE DETAIL. THE CRADLE SHALL NOT BE BEDDED ON STONE MATERIAL.
11. INSTALL RISER / BARREL ASSEMBLY, ALONG WITH THE EMERGENCY DRAIN SYSTEM. INSTALL 48" RCP OUTLET BARREL SPILLWAY FILTER FROM THE DETAILS SHOWN ON SHEET C9.01.
12. CONSTRUCT EMBANKMENT PER SPECIFICATIONS LISTED IN THE "BERM AND SOIL COMPACTION SPECIFICATIONS" NOTES AND REQUIREMENTS OF THE ON-SITE GEOTECHNICAL ENGINEER. ALL CHARACTERISTICS OF THE EMBANKMENT FILL MATERIAL SHALL MEET THE STANDARDS SET FORTH IN THE "BERM AND SOIL COMPACTION SPECIFICATIONS" NOTES, INCLUDING COMPACTION AND MOISTURE REQUIREMENTS. IF NECESSARY TO ACHIEVE PROPER COMPACTION, THE EMBANKMENT FILL MATERIAL WILL BE OVERBUILT IN HORIZONTAL LIFTS AND CUT BACK TO PROPER FINAL GRADE. ANY HAND COMPACTION ACTIVITIES AROUND SPILLWAY OR DRAIN STRUCTURES SHALL BE CONDUCTED IN 4-INCH LOOSE LIFTS AND BE TO THE SAME COMPACTION AND MOISTURE REQUIREMENTS AS THE ENTIRE EMBANKMENT. ALL COMPACTION AND MOISTURE TESTING SHALL BE CARRIED OUT AS DIRECTED BY THE ON-SITE GEOTECHNICAL ENGINEER AND AS LISTED IN THE "BERM AND SOIL COMPACTION SPECIFICATIONS" NOTES.
13. UPON COMPLETION OF DAM EMBANKMENT, PROMPTLY STABILIZE AND SEED DAM EMBANKMENT PER SEEDING SCHEDULE. PERMANENT GROUND COVER SHALL BE ESTABLISHED PER THE PERMANENT SEEDING SCHEDULE FOUND ON SHEET C9.03.
14. SCHEDULE A FINAL AS-BUILT INSPECTION AND AS-BUILT SURVEY WITH THE ENGINEER AND SURVEYOR. AN AS-BUILT INSPECTION AND SURVEY SHALL BE SCHEDULED BEFORE IMPOUNDING WATER IN THE FACILITY AND A MINIMUM OF 60 DAYS PRIOR TO THE ANTICIPATED DATE OF CERTIFICATION APPROVAL. ANY COMMENTS OR DEFICIENCIES IN THE SCM CONSTRUCTION MUST BE CORRECTED TO THE SATISFACTION OF THE ENGINEER AND OWNER BEFORE CERTIFICATION SHALL BE GRANTED.

BERM AND SOIL COMPACTION SPECIFICATIONS

1. PRIOR TO CONSTRUCTION, THE ON-SITE GEOTECHNICAL ENGINEER SHALL IDENTIFY BORROW / FILL AREAS AND VERIFY THEIR SUITABILITY FOR USE WITHIN THE DAM EMBANKMENT. ALSO, THE ON-SITE GEOTECHNICAL ENGINEER SHALL PERFORM STANDARD PROCTORS ON THE PROPOSED BORROW MATERIAL TO ENSURE THAT OPTIMUM MOISTURE CONTENT AND COMPACTION CAN BE ACHIEVED / CONTROLLED DURING CONSTRUCTION.
2. ALL FILL MATERIALS TO BE USED FOR THE DAM EMBANKMENT SHALL BE TAKEN FROM BORROW AREAS APPROVED BY THE ON-SITE GEOTECHNICAL ENGINEER. THE FILL MATERIAL SHALL BE FREE FROM ROOTS, STUMPS, WOOD, STONES GREATER THAN 6", AND FROZEN OR OTHER OBJECTIONABLE MATERIAL. THE FOLLOWING SOIL TYPES ARE SUITABLE FOR USE AS FILL WITHIN THE DAM EMBANKMENT AND KEY TRENCH: ML AND CL. ALL FILL MATERIALS SHALL BE APPROVED BY THE ONSITE GEOTECHNICAL ENGINEER FOR THE INTENDED USE.
3. FILL PLACEMENT FOR THE EMBANKMENT SHALL NOT EXCEED A MAXIMUM 8" LIFT (UNCOMPACTED). EACH LIFT SHALL BE CONTINUOUS FOR THE ENTIRE LENGTH OF EMBANKMENT. BEFORE PLACEMENT OF FILL FOR THE BERM SECTION, ALL UNSUITABLE MATERIAL SHALL BE REMOVED AND THE SURFACE PROPERLY PREPARED FOR FILL PLACEMENT. FILL MATERIAL ADJACENT TO ALL SPILLWAY AND DRAINAGE STRUCTURES SHALL BE PLACED IN 4-INCH (UNCOMPACTED) LIFTS AND HAND-COMPACTED TO THE SAME COMPACTION AND MOISTURE REQUIREMENTS AS THE ENTIRE EMBANKMENT.
4. ALL FILL SOILS USED IN THE EMBANKMENT CONSTRUCTION SHALL BE COMPACTED TO AT LEAST 95% OF THE STANDARD PROCTOR MAXIMUM DRY DENSITY (ASTM D-698). THE FILL SOILS SHALL BE COMPACTED AT A MOISTURE CONTENT WITHIN -1 TO +3 PERCENT OF ITS OPTIMUM MOISTURE CONTENT. COMPACTION TESTS SHALL BE PERFORMED BY THE ON-SITE GEOTECHNICAL ENGINEER DURING CONSTRUCTION TO VERIFY THAT THE PROPER COMPACTION LEVEL HAS BEEN REACHED. THE FILL SHOULD BE COMPACTED USING A SHEEPSFOOT TYPE COMPACTOR. IN ORDER TO PREVENT DAMAGE TO THE PIPE, NO COMPACTION EQUIPMENT SHALL CROSS ANY PIPE UNTIL MINIMUM COVER IS ESTABLISHED ALONG THE PIPE.
5. THE DESIGN ENGINEER SHALL BE PROVIDED WITH REPORTS AND CERTIFICATION BY THE ON-SITE GEOTECHNICAL ENGINEER THAT THE GEOTECHNICAL ASPECTS OF THE FACILITY HAVE BEEN CONSTRUCTED PER PLAN. THIS CERTIFICATION MUST ADDRESS THE TESTING FOR MATERIALS AND COMPACTION OF THE DAM EMBANKMENT AND SPILLWAY. THESE REPORTS AND CERTIFICATION WILL BE NEEDED DURING THE AS-BUILT CERTIFICATION PROCESS FOR THIS STORMWATER CONTROL MEASURE. THEREFORE, IT SHALL BE THE CONTRACTOR'S RESPONSIBILITY TO COORDINATE TESTING AND OBSERVATION WITH THE ON-SITE GEOTECHNICAL ENGINEER.
6. TESTING OF THE NEW FILL MATERIALS SHALL BE PERFORMED TO VERIFY THAT THE RECOMMENDED LEVEL OF COMPACTION IS ACHIEVED DURING CONSTRUCTION. THEREFORE, ONE DENSITY TEST SHALL BE PERFORMED FOR EVERY 2,500 SQUARE FEET OF AREA FOR EVERY LIFT OF FILL OR AS RECOMMENDED BY THE ON-SITE GEOTECHNICAL ENGINEER.
7. TESTING WILL BE REQUIRED ALONG THE 48"Ø RCP OUTLET BARREL AT A FREQUENCY OF ONE TEST PER 25 LF OF PIPE PER VERTICAL FOOT OF FILL OR AS DIRECTED BY THE ON-SITE GEOTECHNICAL ENGINEER.

STATEMENT OF RESPONSIBILITY

1. ALL REQUIRED MAINTENANCE AND INSPECTIONS OF THE STORMWATER CONTROL MEASURE SHALL BE THE RESPONSIBILITY OF THE OWNER, PER THE EXECUTED OPERATION AND MAINTENANCE AGREEMENT FOR THIS FACILITY.

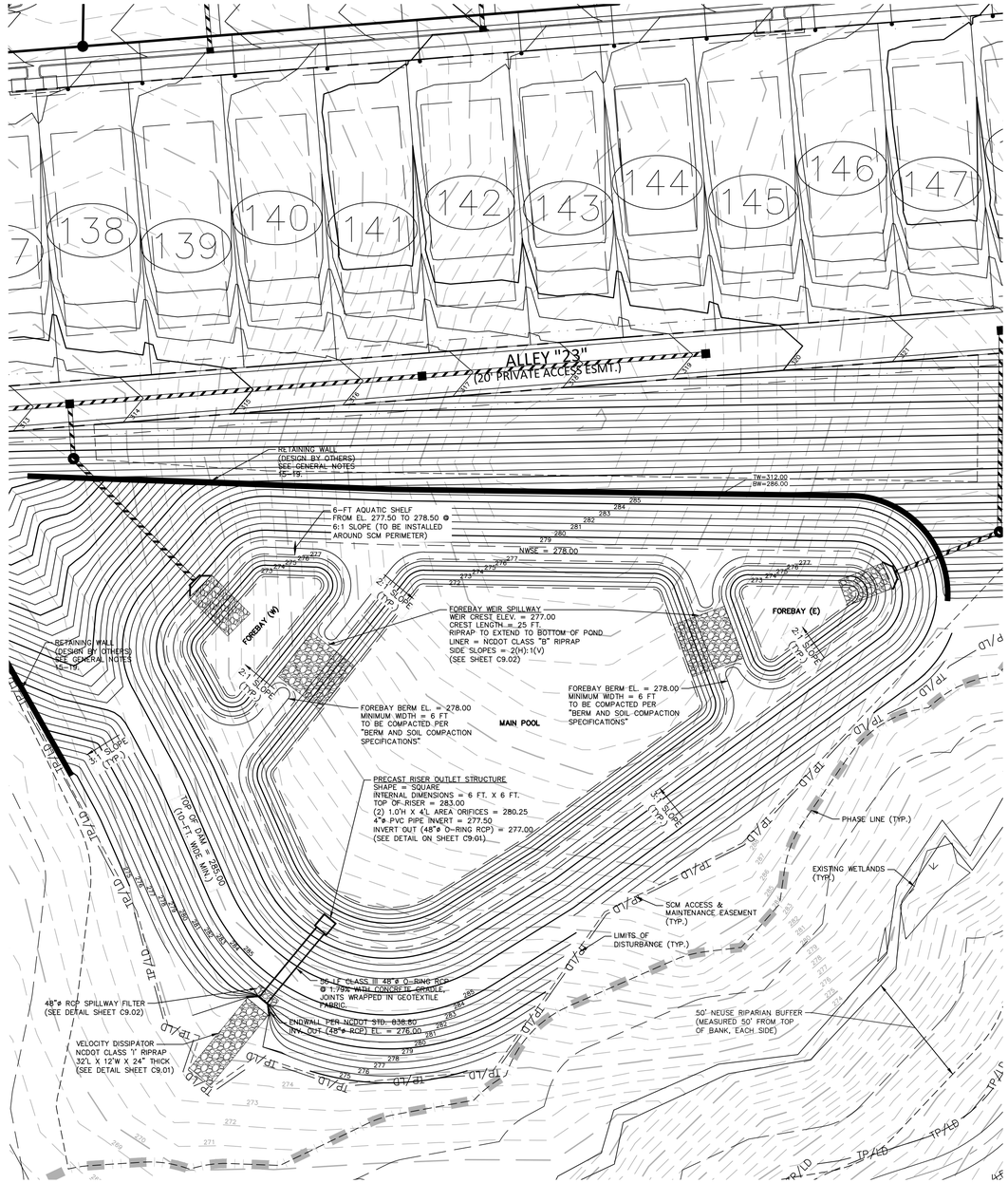

STORMWATER WETPOND 'A' PLAN VIEW

1" = 30'

GRAPHIC SCALE

0 15 30 60

1 inch = 30 ft.

FINAL DRAWING - NOT RELEASED FOR CONSTRUCTION

McADAMS
The John R. McAdams Company, Inc.
2905 Meridian Parkway
Durham, NC 27713

phone 919. 361. 5000
fax 919. 361. 2269
license number: C-0293, C-187

www.mcadamsco.com

CLIENT

ALLIANCE GROUP OF NC, LLC
7208 FALLS OF NEUSE RD, SUITE 101
RALEIGH, NORTH CAROLINA 27615
CONTACT: JACOB ANDERSON
PHONE: 919. 239. 9486

AGNC BROKERAGE | CONSULTING | PLANNING

PEARCE FARM - PHASES 1-3
CONSTRUCTION DRAWINGS - PACKAGE 1

BURLINGTON MILLS ROAD
TOWN OF ROLESVILLE, NORTH CAROLINA

CID-24-08

NORTH CAROLINA PROFESSIONAL ENGINEER SEAL 054404 MARIA C. TORRES — NOT FOR CONSTRUCTION

REVISIONS

NO.	DATE	
1	02. 03. 2025	REVISED PER TOWN, CITY AND COUNTY COMMENTS

PLAN INFORMATION

PROJECT NO.	AGN23001
FILENAME	AGN23001-SCMA
CHECKED BY	MCT
DRAWN BY	MMJ
SCALE	1"=30'
DATE	12. 02. 2024

SHEET

SCM A
PLAN VIEW
C9.00

X:\Projects\AGN\AGN23001\04-Production\Water Resources\Stormwater Management\Site Plan\Full Buildout Model\Current Drawing\AGN23001-SCMA.dwg, 1/31/2025 1:20:38 PM, Mirabelle Jaellana

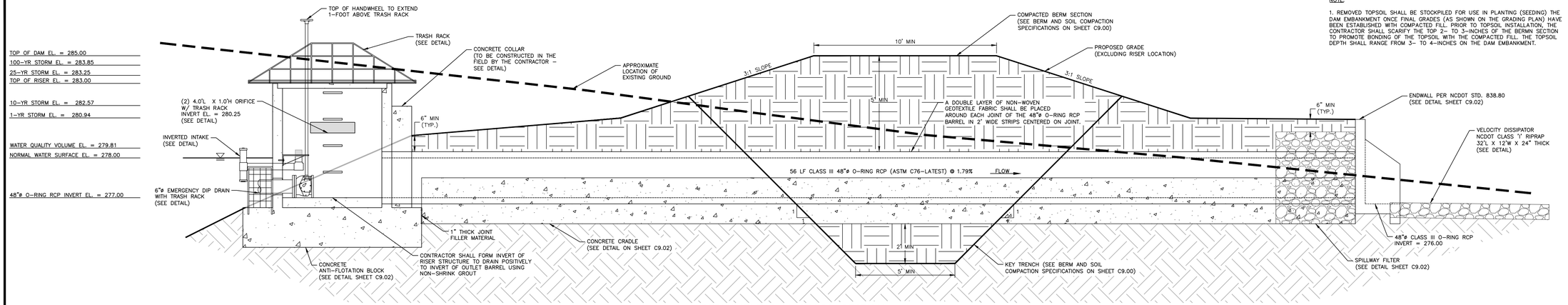

NOTE:

1. REMOVED TOPSOIL SHALL BE STOCKPILED FOR USE IN PLANTING (SEEDING) THE DAM EMBANKMENT ONCE FINAL GRADES (AS SHOWN ON THE GRADING PLAN) HAVE BEEN ESTABLISHED WITH COMPACTED FILL. PRIOR TO TOPSOIL INSTALLATION, THE CONTRACTOR SHALL SCARIFY THE TOP 2- TO 3-INCHES OF THE BERM SECTION TO PROMOTE BONDING OF THE TOPSOIL WITH THE COMPACTED FILL. THE TOPSOIL DEPTH SHALL RANGE FROM 3- TO 4-INCHES ON THE DAM EMBANKMENT.

PERMANENT DAM CROSS SECTION
N.T.S.

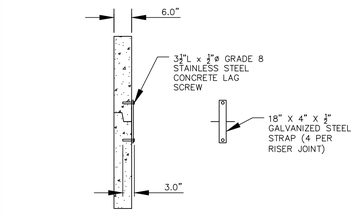

RISER JOINT CONNECTION DETAIL
N.T.S.

NOTES:

1. CONCRETE ANTI-FLOTATION BLOCK TO BE PROVIDED WITH MINIMUM TEMPERATURE AND SHRINKAGE STEEL REINFORCEMENT.
2. TRASH RACKS NOT SHOWN FOR CLARITY.
3. THE NUMBER OF GUIDES FOR THE VALVE STEM SHALL BE DETERMINED IN THE FIELD BY THE CONTRACTOR. THE VALVE STEM MUST BE OPERABLE FROM THE TOP OF THE RISER VIA THE HANDWHEEL WITH AN INSIGNIFICANT AMOUNT OF PLAY IN THE VALVE STEM.
4. CONTRACTOR SHALL PROVIDE A JOINT IN THE OUTLET BARREL NO MORE THAN 5-FT FROM THE RISER.

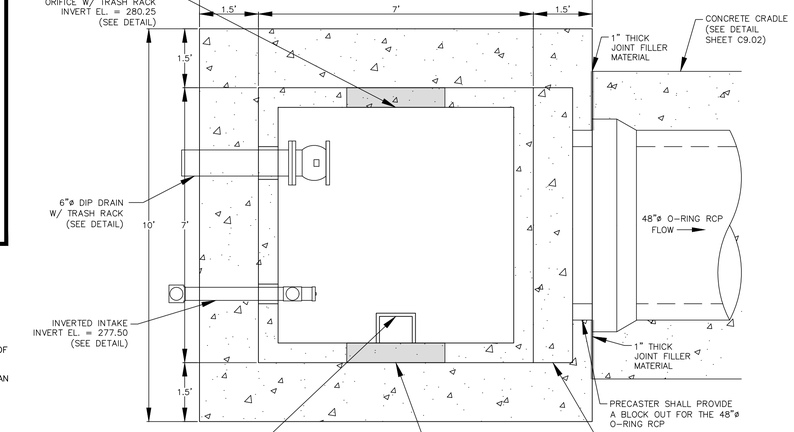

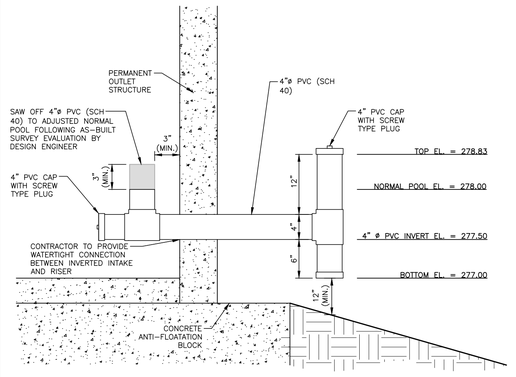

INVERTED INTAKE OUTLET DETAIL
N.T.S.

NOTES:

1. ATTACH TRASH RACK WITH (4) HOT DIPPED GALVANIZED STEEL CLAMPS. EACH CLAMP ATTACHED TO WEIR BOX BY (2) 4"x1/4" CONCRETE ANCHOR BOLTS. EACH CLAMP SHALL BE COATED WITH AN EPOXY COATING.
2. ALL REBAR TO BE GALVANIZED #4 REBAR WITH AN EPOXY COATING.
3. BARS TO EXTEND ON BOTTOM OF TRASH RACK.

AREA ORIFICE TRASH RACK DETAIL
N.T.S.

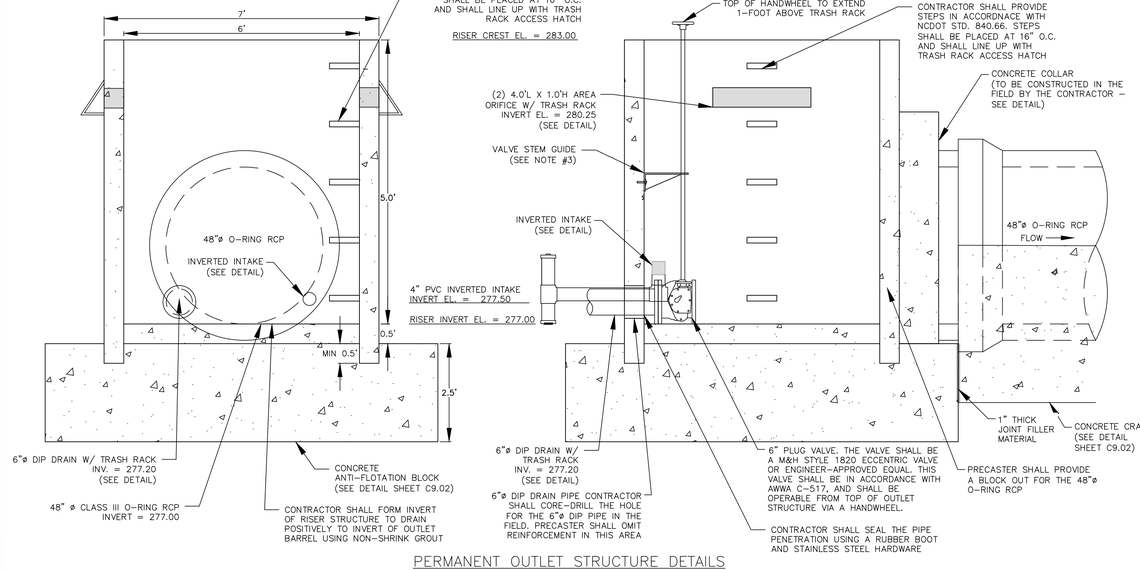

PERMANENT OUTLET STRUCTURE DETAILS
N.T.S.

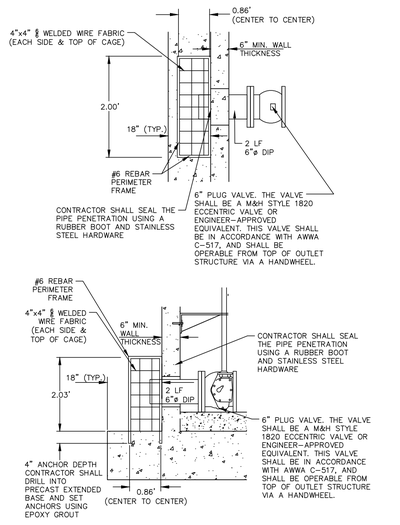

6"ø EMERGENCY DIP DRAIN TRASH RACK DETAILS
N.T.S.

NOTES:

1. A FILTER BLANKET IS TO BE INSTALLED BETWEEN THE RIPRAP AND SOIL FOUNDATION. THE FILTER BLANKET WILL CONSIST OF A MINIMUM 4" THICK LAYER OF STONE (NCDOT #57) UNDERLAIN WITH MIRAFI FILTER WEAVE 700 OR ENGINEER-APPROVED EQUIVALENT.

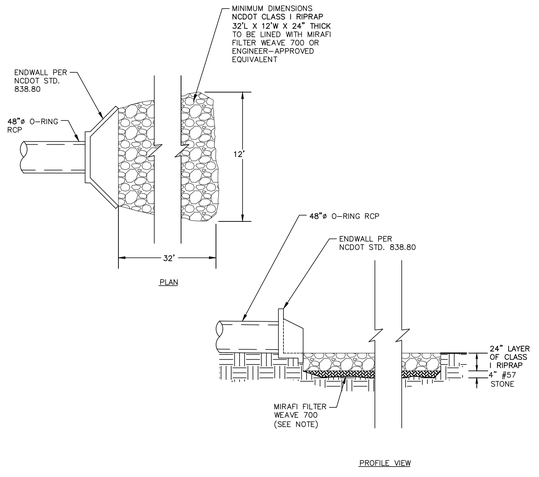

OUTLET BARREL VELOCITY DISSIPATOR
N.T.S.

FINAL DRAWING - NOT RELEASED FOR CONSTRUCTION

McADAMS
The John R. McAdams Company, Inc.
2905 Meridian Parkway
Durham, NC 27713

phone 919. 361. 5000
fax 919. 361. 2269
license number: C-0293, C-187

www.mcadamsco.com

CLIENT

ALLIANCE GROUP OF NC, LLC
7208 FALLS OF NEUSE RD, SUITE 101
RALEIGH, NORTH CAROLINA 27615
CONTACT: JACOB ANDERSON
PHONE: 919. 239. 9486

AGNC BROKERAGE | CONSULTING | PLANNING

PEARCE FARM - PHASES 1-3
CONSTRUCTION DRAWINGS - PACKAGE 1
BURLINGTON MILLS ROAD
TOWN OF ROLESVILLE, NORTH CAROLINA

CID-24-08

NORTH CAROLINA PROFESSIONAL SEAL 054404 ENGINEER MARIA C. TORRES — NOT FOR CONSTRUCTION

REVISIONS

NO.	DATE	
1	02. 03. 2025	REVISED PER TOWN, CITY AND COUNTY COMMENTS

PLAN INFORMATION

PROJECT NO.	AGN23001
FILENAME	AGN23001-SCMA
CHECKED BY	MCT
DRAWN BY	MMJ
SCALE	N.T.S.
DATE	12. 02. 2024

SHEET

SCM A DETAILS

C9.01

X:\Projects\AGN\AGN23001\04-Production\Water Resources\Stormwater Management\Site Plan\Full Buildout Model\Current Drawing\AGN23001-SCMA.dwg, 1/30/2025 3:11:56 PM, Mirabelle Javellana

STATE OF NORTH CAROLINA
DEPT. OF TRANSPORTATION
DIVISION OF HIGHWAYS
RALEIGH, N.C.

7-06

ENGLISH STANDARD DRAWING FOR

DRAINAGE STRUCTURE STEPS

SHEET 1 OF 1

840.66

NOTES:
INSTALL ALL STEPS PROTRUDING 4" FROM INSIDE FACE OF STRUCTURE WALL.
STEPS DIFFERING IN DIMENSIONS, CONFIGURATION, OR MATERIALS FROM THOSE SHOWN MAY ALSO BE USED PROVIDED THE CONTRACTOR HA
THE ENGINEER WITH DETAILS OF THE PROPOSED STEPS AND HAS RECEIVED WRITTEN APPROVAL FROM THE ENGINEER FOR THE USE OF SUCH

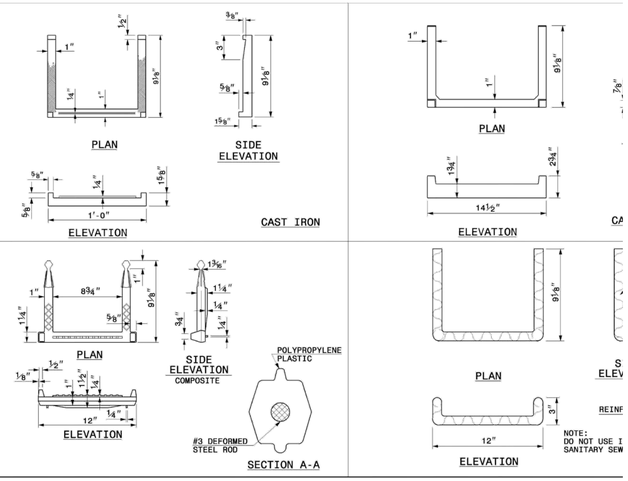

NOTE: RIPRAP TO EXTEND FROM TOE OF FOREBAY TO TOE OF MAIN POOL

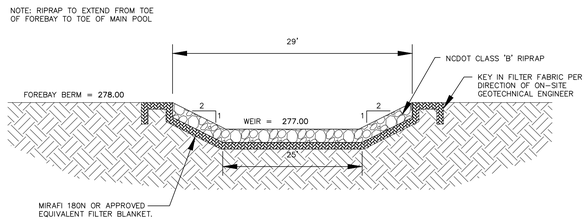

FOREBAY WEIR SPILLWAY CROSS-SECTION
N.T.S.

NOTES:
1. ALL REBAR TO BE #4 REBAR.
2. ALL REBAR AND ANGLES TO BE HOT-DIPPED GALVANIZED AND BE PROVIDED WITH AN EPOXY COATING.
3. THE HOT-DIPPED, GALVANIZED 2"x2"x1/4" ANGLES SHALL BE WELDED TO THE REBAR TRASH RACK. ONCE WELDED, THE ENTIRE ASSEMBLY SHALL BE PLACED ONTO THE RISER WITH ANGLES SITTING DIRECTLY ON TOP OF RISER.
4. TRASH RACK IS TO BE SECURELY FASTENED TO THE SPILLWAY RISER WITH A MINIMUM OF FOUR CORROSION-RESISTANT ANCHORS.
5. ACCESS HATCH SHALL ALIGN WITH STEPS IN RISER.

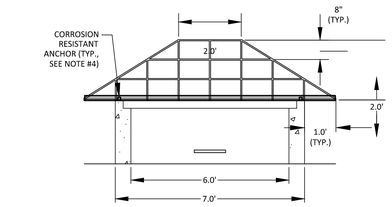

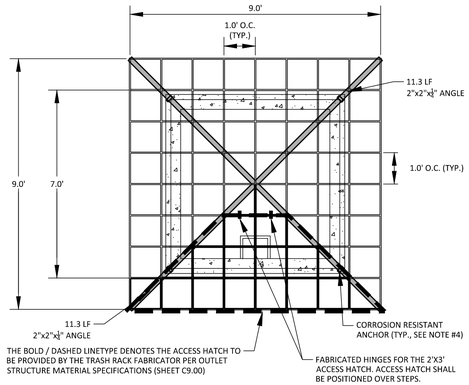

6'X6' RISER TRASH RACK DETAIL
N.T.S.

NOTE:
1. HAVILAND DRAINAGE PRODUCTS 4" ALUMINUM ANIMAL GUARD ITEM NUMBER AGSS04 (OR ENGINEER APPROVED EQUIVALENT) TO BE INSTALLED AT OUTLET OF 4" HDPE PIPES

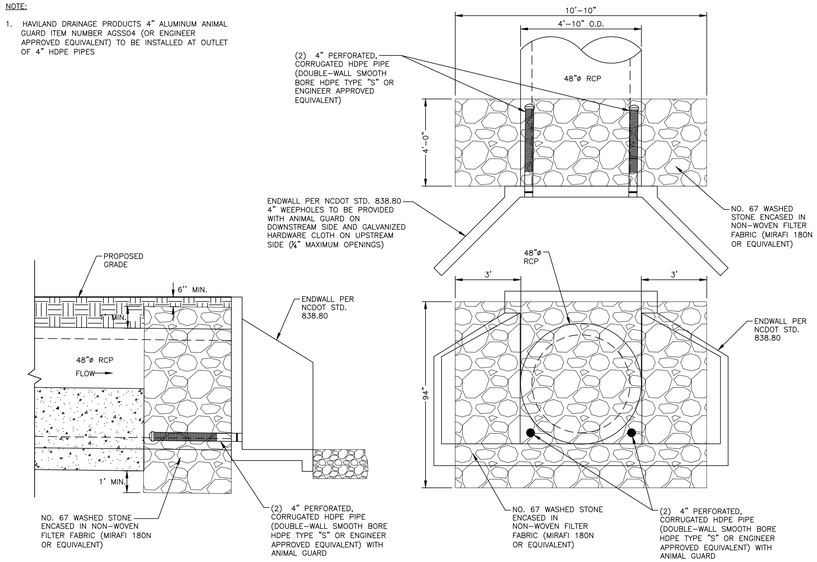

48" SPILLWAY FILTER DETAIL
N.T.S.

NOTE:
1. CONTRACTOR SHALL PROVIDE A JOINT IN THE OUTLET BARREL NO MORE THAN 5-FT FROM THE RISER.

BARREL PIPE CONCRETE CRADLE CONSTRUCTION SEQUENCE

1. BRING GRADE OF DAM EMBANKMENT TO SPRINGLINE OF PIPE ELEVATION.
2. EXCAVATE TRENCH FOR CRADLE AND BARREL PER DIMENSIONS ON DRAWINGS.
3. PLACE BARREL PIPE ON CONCRETE BLOCKS TO GRADE. AT THIS STEP, CONTRACTOR SHALL WRAP A DOUBLE LAYER OF NON-WOVEN GEOTEXTILE FABRIC AROUND EACH JOINT OF THE **48"ø** O-RING RCP BARREL IN 2' WIDE STRIPS CENTERED ON JOINT.
4. PLACE CONCRETE FOR CRADLE FOR EACH SECTION FROM ONE SIDE OF THE TRENCH. ALLOW CONCRETE TO FILL ENTIRE AREA UNDER PIPE AND PIPE HAUNCHES AS TO LEAVE NO VOIDS UNDER THE PIPE BEFORE PLACING CONCRETE ON THE OPPOSITE SIDE OF THE TRENCH. PLACE ENTIRE CRADLE AS ONE LIFT (VERTICALLY) PER DRAWINGS.
5. ALLOW CRADLE TO CURE FOR A MINIMUM OF 7 DAYS BEFORE ANY VIBRATING COMPACTION EQUIPMENT IS USED IN THE VICINITY OF THE BARREL PIPE.
6. TRENCH TO BE BACKFILLED IN 5" LIFTS WHEN COMPACTION IS BY HAND. BACKFILL IS IN 8" LIFTS WHEN CONDUCTED BY MACHINE. MINIMUM OF 2 FEET COVER MUST BE PRESENT ON **48"ø** RCP BEFORE DRIVING OVER WITH HEAVY EQUIPMENT.

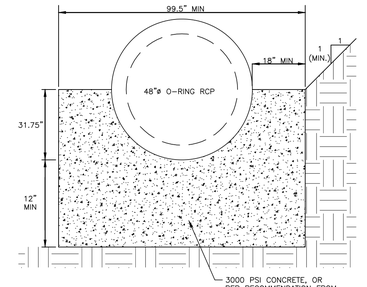

48" CONCRETE CRADLE DETAIL
N.T.S.

NOTES:
1. ALL REINFORCING STEEL IN RISER ANTI-FLOTATION BLOCK TO BE GRADE 60 #4 BARS FOR HORIZONTAL CROSSING AND GRADE 60 #4 BARS FOR VERTICAL CONNECTIONS.
2. INSIDE OF RISER BOTTOM TO BE FORMED WITH NON-SHRINK GROUT TO INVERT ELEVATION OF BARREL.
3. ALL PIPE PENETRATIONS THROUGH THE CONCRETE RISER STRUCTURE SHALL BE MADE WATERTIGHT.

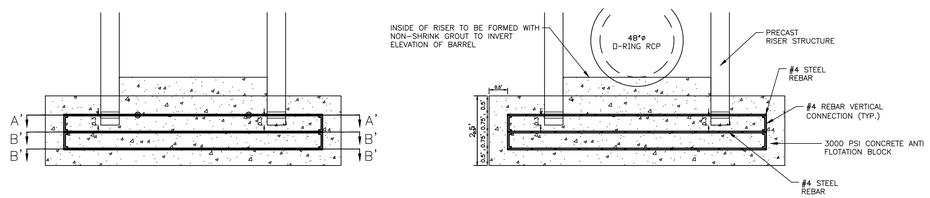

CROSS-SECTION 'A-A'
N.T.S

CROSS-SECTION 'B-B'
N.T.S

RISER/ANTI-FLOTATION BLOCK CONNECTION
N.T.S.

NOTES:
1. ALL REBAR TO BE #4 REBAR.
2. WRAP OUTSIDE OF PIPE WITH VOLCLAY WATERSTOP-RX® 101 (OR PRE-APPROVED EQUIVALENT) AT THE FACE OF THE PRECAST STRUCTURE WALL. PROVIDE 6" OVER LAP ON THE BOTTOM OF THE PIPE.

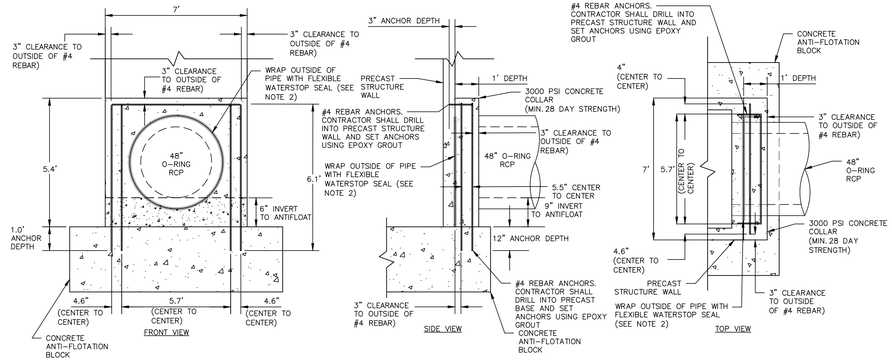

48"ø CONCRETE COLLAR DETAIL
N.T.S.

FINAL DRAWING - NOT RELEASED FOR CONSTRUCTION

McADAMS
The John R. McAdams Company, Inc.
2905 Meridian Parkway
Durham, NC 27713

phone 919. 361. 5000
fax 919. 361. 2269
license number: C-0293, C-187

www.mcadamsco.com

CLIENT

ALLIANCE GROUP OF NC, LLC
7208 FALLS OF NEUSE RD, SUITE 101
RALEIGH, NORTH CAROLINA 27615
CONTACT: JACOB ANDERSON
PHONE: 919. 239. 9486

AGNC BROKERAGE | CONSULTING | PLANNING

PEARCE FARM - PHASES 1-3
CONSTRUCTION DRAWINGS - PACKAGE 1
BURLINGTON MILLS ROAD
TOWN OF ROLESVILLE, NORTH CAROLINA

CID-24-08

NORTH CAROLINA PROFESSIONAL ENGINEER SEAL 054404 MARIA C. TORRES — NOT FOR CONSTRUCTION

REVISIONS

NO.	DATE	
1	02. 03. 2025	REVISED PER TOWN, CITY AND COUNTY COMMENTS

PLAN INFORMATION

PROJECT NO.	AGN23001
FILENAME	AGN23001-SCMA
CHECKED BY	MCT
DRAWN BY	MMJ
SCALE	N.T.S.
DATE	12. 02. 2024

SHEET

SCM A DETAILS

C9.02

X:\Projects\AGN\AGN23001\04-Production\Water Resources\Stormwater Management\Site Plan\Full Buildout Model\Current Drawings\(AGN23001-SCMA.dwg, 1/30/2023 3:12:05 PM, Mirabelle Javellana

STORMWATER CONTROL MEASURE 'A' PLANTING PLAN SPECIFICATIONS

PLANT SCHEDULE

SYMBOL	CODE	QTY	COMMON NAME	BOTANICAL NAME	CONT	REMARKS
GROUND COVERS						
	AISM	291	Swamp Milkweed	Asclepias incarnata	4" pot	Shallow Land
	IVBF	290	Blue Flag Iris	Iris virginica	4" pot	Shallow Water
	LCCF	276	Cardinal Flower	Lobelia cardinalis	4" pot	Shallow Land
	LELL	269	Longleaf Lobelia	Lobelia elongata	4" pot	Shallow Water
	PCPW	284	Pickerel Weed	Pontederia cordata	4" pot	Shallow Water
	STSB	293	Softstem Bulrush	Schoenoplectus tabernaemontani	4" pot	Shallow Water

SEEDBED PREPARATION

1. CHISEL COMPACTED AREAS AND SPREAD TOPSOIL 3-4 INCHES DEEP OVER ADVERSE SOIL CONDITIONS. TOPSOIL SHOULD BE INCORPORATED INTO THE FINAL GRADING OF THE BASIN SIDE SLOPES AND SHALLOW LAND AND SHALLOW WATER AREAS. CONTRACTOR SHOULD SCARIFY THE TOP 3-4 INCHES OF THE COMPACTED FILL TO PROMOTE BONDING WITH TOPSOIL.
2. RIP THE ENTIRE AREA TO 6 INCHES DEPTH.
3. REMOVE ALL LOOSE ROCK, ROOTS, AND OTHER OBSTRUCTIONS LEAVING SURFACE REASONABLY SMOOTH AND UNIFORM.
4. PER ONE TIME ONLY, APPLY AGRICULTURAL LIME, FERTILIZER, AND SUPERPHOSPHATE UNIFORMLY AND MIX WITH SOIL.
5. CONTINUE TILLAGE UNTIL A WELL-PULVERIZED, FIRM REASONABLY UNIFORM SEEDBED IS PREPARED 4 TO 6 INCHES DEEP.
6. SEED ON A FRESHLY PREPARED SEEDBED AND COVER.
7. MULCH IMMEDIATELY AFTER SEEDING AND ANCHOR MULCH.
8. INSPECT ALL SEEDED AREAS AND MAKE NECESSARY REPAIRS OR RESEEDINGS WITHIN THE PLANTING SEASON, IF POSSIBLE. AFTER PERMANENT COVER IS ESTABLISHED.
9. CONSULT CONSERVATION INSPECTOR ON MAINTENANCE TREATMENT.

TEMPORARY SEEDING SCHEDULE

SEEDING DATE	SEEDING MIXTURE	APPLICATION RATE
JAN 1 - MAY 1	RYE (GRAIN)	120 LBS/AC
	KOBE LESPEDEZA	50 LBS/AC
MAY 1 - AUG 15	GERMAN MILLET	40 LBS/AC
AUG 15 - DEC 30	RYE (GRAIN)	120 LBS/AC

SOIL AMENDMENTS
FOLLOW RECOMMENDATIONS OF SOIL TESTS OR APPLY 2,000 LB/AC GROUND AGRICULTURE LIMESTONE AND 750 LB/AC 10-10-10 FERTILIZER (FROM AUG 15 - DEC 30, INCREASE 10-10-10 FERTILIZER TO 1000 LB/AC).

MULCH
APPLY 4000 LB/AC STRAW. ANCHOR STRAW BY TACKING WITH ASPHALT, NETTING, OR A MULCH ANCHORING TOOL. A DISK WITH BLADES SET NEARLY STRAIGHT CAN BE USED AS A MULCH ANCHORING TOOL.

MAINTENANCE
JAN 1 - AUG 15: REFERTILIZE IF GROWTH IS NOT FULLY ADEQUATE. RESEED, REFERTILIZE, AND MULCH IMMEDIATELY FOLLOWING EROSION OR OTHER DAMAGE.

AUG 15 - DEC 30: REPAIR AND REFERTILIZE DAMAGED AREAS IMMEDIATELY. TOP DRESS WITH 50 LB/AC OF NITROGEN IN MARCH. IF IT IS NECESSARY TO EXTEND TEMPORARY COVER BEYOND JUNE 15, OVERSEED WITH 50 LB/AC KOBE LESPEDEZA IN LATE FEBRUARY OR EARLY MARCH.

NOTE: USE THE TEMPORARY SEEDING SCHEDULE ONLY WHEN DATE IS NOT CORRECT TO USE THE PERMANENT SEEDING SCHEDULE.

PERMANENT SEEDING SCHEDULE (DAM EMBANKMENTS)

SEEDING DATE	SEEDING MIXTURE	APPLICATION RATE
MARCH 1 - JUNE 31	HYBRID BERMUDA GRASS	1 LBS/1000 SF (OR MANUFACTURER SPECIFICATIONS)
SEPT 1 -OCT 31		1 LBS/1000 SF (OR MANUFACTURER SPECIFICATIONS)

SOIL AMENDMENTS
FOLLOW RECOMMENDATIONS OF SOIL TESTS OR APPLY 4,000 LB/AC GROUND AGRICULTURE LIMESTONE AND 1000 LB/AC 10-10-10 FERTILIZER.

MULCH
APPLY 4000 LB/AC STRAW. ANCHOR STRAW BY TACKING WITH ASPHALT, NETTING, OR A MULCH ANCHORING TOOL. A DISK WITH BLADES SET NEARLY STRAIGHT CAN BE USED AS A MULCH ANCHORING TOOL.

MAINTENANCE
INSPECT AND REPAIR MULCH FREQUENTLY. REFERTILIZE IN LATE WINTER OF THE FOLLOWING YEAR; USE SOIL TESTS OR APPLY 150 LB/AC 10-10-10 FERTILIZER. MOW REGULARLY TO A HEIGHT OF 2-4 INCHES.

NOTE: PERMANENT SEEDING SCHEDULE IS FOR SLOPES OF THE BASIN AND TOP OF BERM.

PLANTING INSTRUCTIONS

PLANTING TECHNIQUES
A. INSURE THAT ROOTS, ONCE REMOVED FROM POT, ARE STRAIGHTENED AND FACE DOWNWARD.
B. CREATE PLANTING AREA FOR EACH PLANT AND EXCAVATE PIT.
C. PLACE PLANTS IN PIT INSURING ROOTS ARE FACING COMPLETELY DOWNWARD.
D. HEEL IN SOIL AROUND PLANT AND PROCEED TO NEXT PLANTING LOCATION.
E. NEWLY PLANTED PLANTS NEED TO BE FASTENED TO THE SUBSTRATE FOR THE ESTABLISHMENT OF NEW ROOTS.
F. ROOTS SHALL BE SPREAD IN THEIR NORMAL POSITION. ALL BROKEN OR FRAYED ROOTS HALL BE CUT OFF CLEANLY.
G. THE DIAMETER OF THE PITS FOR ALL VEGETATIVE STOCK SHALL BE AT LEAST THREE TIMES THE DIAMETER OF THE ROOT MASS. PLANT PIT WALL SHALL BE SCARIFIED PRIOR TO PLANT INSTALLATION.
H. SET THE PLANTS UPRIGHT, IN THE CENTER OF THE PIT. THE BOTTOM OF THE ROOT MASS SHOULD BE RESTING ON UNDISTURBED SOIL.
I. PLACE THE BACKFILL AROUND THE BASE AND SIDES OF THE ROOT MASS, AND WORK EACH LAYER TO SETTLE BACKFILL AND TO ELIMINATE VOIDS AND AIR POCKETS. WHEN PIT IS APPROXIMATELY 2/3 FULL, WATER THOROUGHLY BEFORE PLACING REMAINDER OF THE BACKFILL. WATER AGAIN AFTER PLACING FINAL LAYER OF BACKFILL.
J. BROKEN OR DAMAGED PARTS WILL BE CUT BACK TO UNDAMAGED TISSUE, LEAVING AS MUCH GREEN BASAL TISSUE AS POSSIBLE ABOVE THE ROOTS. IF MORE THAN FIFTY PERCENT (50%) OF THE PLANT IS DAMAGED THEN CONTRACTOR SHALL REPLACE THE PLANT.

CONTAINER STOCK / BARE ROOT
A. STOCK SHALL HAVE BEEN GROWN IN A CONTAINER LONG ENOUGH FOR THE ROOT SYSTEM TO HAVE DEVELOPED SUFFICIENTLY TO HOLD ITS SOIL TOGETHER ONCE REMOVED FROM THE CONTAINER.
B. CONTAINER PLANTS WILL NEED TO BE WATERED REGULARLY AND PLACED IN SHADY CONDITIONS UNTIL PLANTING OCCURS.
C. BARE ROOT PLANTS ARE FOR IMMEDIATE PLANTING, OTHERWISE SEE D) BELOW.
D. IF BARE ROOTS SPECIMENS ARE NOT TO BE PLANTED WITHIN FOUR (4) DAYS, TEMPORARY HOLDING OF BARE ROOT SPECIMENS ARE TO BE COVERED ENTIRELY BY A SUITABLE MEDIUM (ETC. SOIL, SAWDUST, MULCH OR THE LIKE) AND WATERED REGULARLY SO AS TO NOT DRY OUT.

PLANT LOCATIONS
A. NEW PLANTINGS SHALL BE LOCATED WHERE SHOWN ON PLAN EXCEPT WHERE CHANGES HAVE BEEN MADE IN PROPOSED CONSTRUCTION.
B. NECESSARY ADJUSTMENTS SHALL BE MADE ONLY AFTER APPROVAL BY THE OWNER OR THE OWNER'S REPRESENTATIVE.

WATER
WATER SHALL BE POTABLE AND SHALL NOT CONTAIN ELEMENTS TOXIC TO PLANT LIFE.

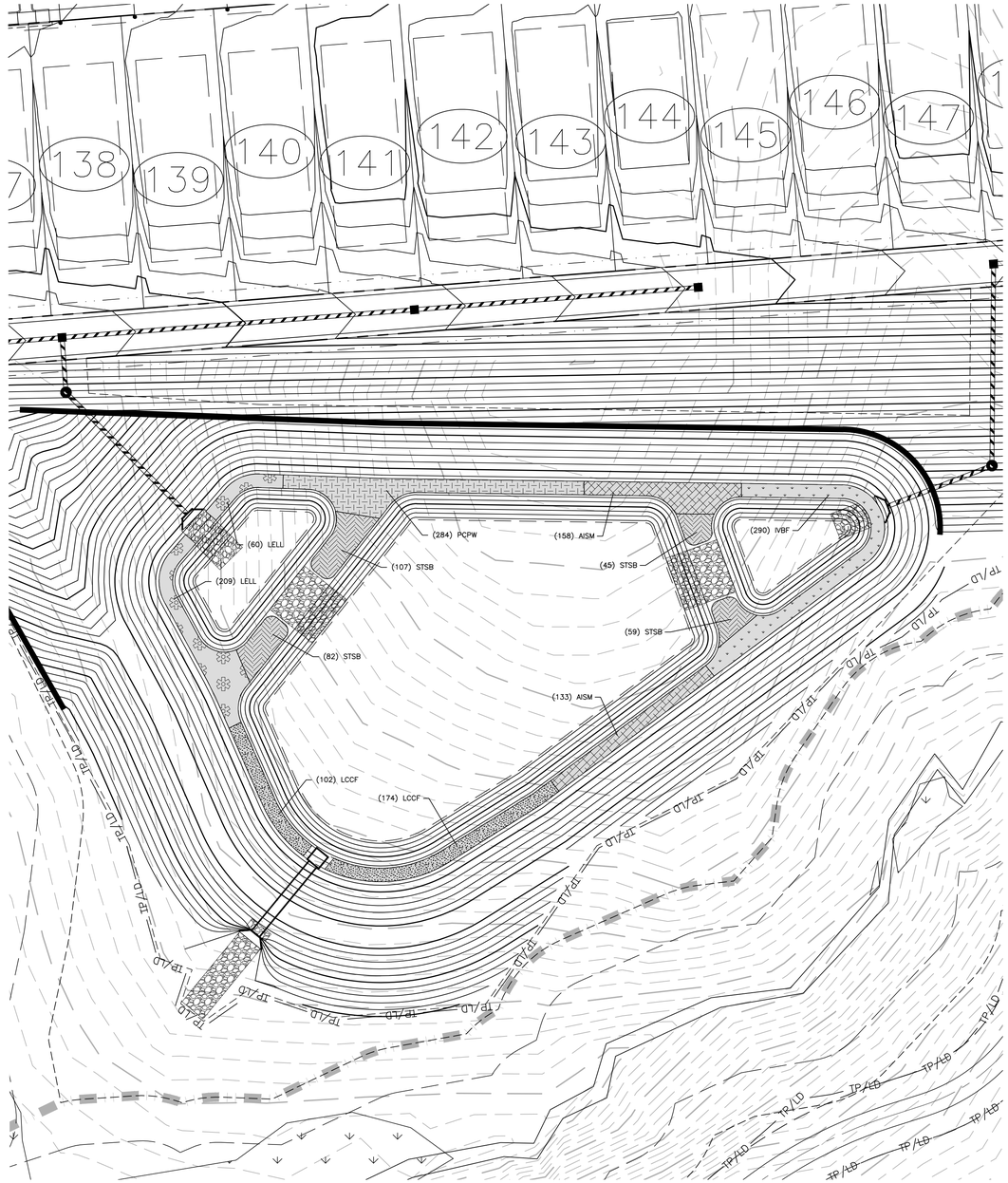

STORMWATER WETPOND 'A' LANDSCAPE PLAN
1" = 30'

GRAPHIC SCALE
0 15 30 60
1 inch = 30 ft.

FINAL DRAWING - NOT RELEASED FOR CONSTRUCTION

McADAMS
The John R. McAdams Company, Inc.
2905 Meridian Parkway
Durham, NC 27713

phone 919. 361. 5000
fax 919. 361. 2269
license number: C-0293, C-187

www.mcadamsco.com

CLIENT

ALLIANCE GROUP OF NC, LLC
7208 FALLS OF NEUSE RD, SUITE 101
RALEIGH, NORTH CAROLINA 27615
CONTACT: JACOB ANDERSON
PHONE: 919. 239. 9486

AGNC BROKERAGE | CONSULTING | PLANNING

PEARCE FARM - PHASES 1-3
CONSTRUCTION DRAWINGS - PACKAGE 1
BURLINGTON MILLS ROAD
TOWN OF ROLESVILLE, NORTH CAROLINA

CID-24-08

NORTH CAROLINA PROFESSIONAL SEAL 054424 ENGINEER MARIA C. TORRES — NOT FOR CONSTRUCTION

REVISIONS

NO.	DATE	
1	02. 03. 2025	REVISED PER TOWN, CITY AND COUNTY COMMENTS

PLAN INFORMATION

PROJECT NO.	AGN23001
FILENAME	AGN23001-SCMA
CHECKED BY	MCT
DRAWN BY	MMJ
SCALE	1" = 30'
DATE	12. 02. 2024

SHEET

SCM A
LANDSCAPE PLAN
C9.03

X:\Projects\AGN\AGN23001\04-Production\Water Resources\Stormwater Management\Site Plan\Full Buildout Model\Current Drawings\AGN23001-SCMA.dwg, 1/30/2025 3:12:20 PM, Mirabelle Jawillana

STORMWATER CONTROL MEASURE 'B' CONSTRUCTION SPECIFICATIONS

GENERAL NOTES

1. PRIOR TO CONSTRUCTION, ANY DISCREPANCIES IN THE PLANS AND NOTES SHALL BE BROUGHT TO THE DESIGN ENGINEER'S ATTENTION IMMEDIATELY. IF THE CONTRACTOR, IN THE COURSE OF WORK, FINDS ANY DISCREPANCIES IN THE PLANS OR NOTES GIVEN BY THE PROJECT ENGINEER, IT SHALL BE THEIR DUTY TO IMMEDIATELY INFORM THE PROJECT ENGINEER IN WRITING. ANY WORK DONE AFTER SUCH A DISCOVERY, UNTIL AUTHORIZED, WILL BE AT THE CONTRACTOR'S RISK.
2. THE CONTRACTOR SHALL OBTAIN ALL NECESSARY LICENSES AND PERMITS REQUIRED TO COMPLETE THE WORK INCLUDED IN THE CONTRACT DOCUMENTS AT THE CONTRACTOR'S EXPENSE.
3. IT IS THE CONTRACTOR'S RESPONSIBILITY TO VERIFY THAT THEY AND THEIR SUBCONTRACTORS HAVE THE CORRECT AND MOST UP-TO-DATE PLANS AVAILABLE.
4. THE PROJECT WILL MEET ALL RELEVANT DESIGN REQUIREMENTS IN THE NCDEQ MANUAL AND THE TOWN OF ROLESVILLE REGULATIONS AND STANDARDS.
5. THE DESIGN ENGINEER OR THEIR REPRESENTATIVE SHALL BE ON SITE FOR THE INSTALLATION OF ESSENTIAL ELEMENTS OF THE PRINCIPAL SPILLWAY INCLUDING BUT NOT LIMITED TO THE ANTI-FLOAT BLOCK, RISER, CONCRETE COLLAR, CONCRETE CRADLE, AND THE OUTLET BARREL. THE CONTRACTOR SHALL NOTIFY THE DESIGN ENGINEER 72 HOURS PRIOR TO INSTALLATION OF THESE ITEMS TO ENSURE THAT A REPRESENTATIVE CAN BE ON-SITE. PHOTOGRAPHS OF THESE ITEMS MUST BE TAKEN PRIOR TO BACKFILLING FOR USE IN THE AS-BUILT PHASE. IF THE CONTRACTOR INSTALLS THESE WITHOUT THE ENGINEER OR ENGINEER'S REPRESENTATIVE ON-SITE, THEN THE ELEMENTS SHALL BE UNCOVERED FOR INSPECTION AT THE CONTRACTOR'S EXPENSE.
6. THE FINAL CERTIFICATION FOR THIS FACILITY WILL INCLUDE A CERTIFICATION BY THE ON-SITE GEOTECHNICAL ENGINEER THAT THE PROJECT WAS CONSTRUCTED PER THE APPROVED PLANS. IT IS THE RESPONSIBILITY OF THE CONTRACTOR TO COORDINATE WITH THE ON-SITE GEOTECHNICAL ENGINEER FOR OBSERVATION AND TESTING SUCH THAT THE ON-SITE GEOTECHNICAL ENGINEER CAN CERTIFY THE CONSTRUCTION OF THE DAM EMBANKMENT AND SPILLWAY. THIS CERTIFICATION MUST ADDRESS THE TESTING FOR MATERIALS AND COMPACTION OF THE DAM EMBANKMENT AND SPILLWAY.
7. ALL CONSTRUCTION ACTIVITY RELATED TO THE PROPOSED STORMWATER CONTROL MEASURE SHALL BE PER THE DETAILS AND SPECIFICATIONS SHOWN IN THESE DRAWINGS. SOILS, COMPACTION, AND OTHER MISCELLANEOUS DETAILS AND SPECIFICATIONS MAY BE MODIFIED PER THE RECOMMENDATIONS OF THE ON-SITE GEOTECHNICAL ENGINEER. HOWEVER, PRIOR TO IMPLEMENTATION, THE DESIGN ENGINEER SHALL BE NOTIFIED OF ANY DEVIATION FROM THESE DESIGN DRAWINGS, INCLUDING SHOP DRAWINGS FOR ANY PROPOSED MODIFICATION.
8. DURING THE INITIAL STAGES OF CONSTRUCTION, THE STORMWATER CONTROL MEASURE MAY BE USED AS A SEDIMENT BASIN FOR EROSION CONTROL PURPOSES. IF SO, THE CONTRACTOR SHALL FOLLOW THE GENERAL CONSTRUCTION SEQUENCE BELOW:
   A. THE CONTRACTOR SHALL CONSTRUCT THE ENTIRE FACILITY (PERMANENT OUTLET STRUCTURE, DAM, ETC.) WITH THE EXCEPTION OF THE INTERIOR FINE GRADING FOR THE FACILITY. THE INTERIOR FINE GRADING WILL BE CONSTRUCTED ONCE THE EROSION CONTROL PHASE IS COMPLETE.
   B. THE TEMPORARY DRAWDOWN RISER (OR SKIMMER) SHALL BE CONNECTED TO THE PERMANENT 6"Ø DIP DRAIN PIPE.
   C. ONCE THE UPSTREAM DRAINAGE AREA IS STABILIZED AND THE EROSION CONTROL INSPECTOR APPROVES THE REMOVAL OF THE SEDIMENT BASIN, THE CONTRACTOR SHALL REMOVE THE TEMPORARY DRAWDOWN RISER (OR SKIMMER) AND CLEAN OUT THE BASIN IN ACCORDANCE WITH EROSION CONTROL STANDARD PRACTICES. ALL SEDIMENT, TRASH, ETC. SHALL BE DISPOSED OF PROPERLY (I.E. PLACED IN A LANDFILL) AND NOT STOCKPILED IN AN AREA WHERE WATER QUALITY COULD BE ADVERSELY AFFECTED.
   D. ONCE THE BASIN IS CLEANED OUT, AND ALL EROSION CONTROL DEVICES REMOVED, THE CONTRACTOR SHALL CONSTRUCT THE INTERIOR GRADING SHOWN ON THIS SHEET.
   E. ONCE THE GRADING IS COMPLETE, THE CONTRACTOR SHALL REQUEST AN ON-SITE INSPECTION AND AN AS-BUILT SURVEY PRIOR TO INSTALLATION OF THE STORMWATER CONTROL MEASURE PLANTS. IF THE CONTRACTOR PLANTS THE PROPOSED VEGETATION PRIOR TO AN AS-BUILT SURVEY (AND SUBSEQUENT APPROVAL), ANY CHANGES TO THE GRADING / RE-PLANTING OF PLANTS WILL BE AT THE CONTRACTOR'S EXPENSE.
   F. ONCE THE ENGINEER HAS APPROVED THE AS-BUILT GRADING, THE CONTRACTOR SHALL PLANT THE PROPOSED STORMWATER CONTROL MEASURE PLANTS SHOWN ON THE LANDSCAPE PLAN FOR THE FACILITY. AFTER COMPLETION OF THE PLANTING, THE LANDSCAPE CONTRACTOR SHALL PROVIDE A LETTER TO THE ENGINEER CERTIFYING THAT THE PLANTS HAVE BEEN INSTALLED PER THE APPROVED STORMWATER CONTROL MEASURE PLANTING PLAN.
9. ALL OSHA REQUIREMENTS FOR EXCAVATIONS (SHORING, DEPTH, ETC.) ARE THE RESPONSIBILITY OF THE CONTRACTOR. IF REQUIRED, THE CONTRACTOR SHALL PROVIDE AN EXCAVATION PLAN TO BE SEALED BY A NC P.E. IT IS THE RESPONSIBILITY OF THE CONTRACTOR TO DETERMINE IF AN EXCAVATION PLAN IS REQUIRED. THE JOHN R. MCADAMS COMPANY ASSUMES NO RESPONSIBILITY FOR ANY EXCAVATION DESIGN RELATED TO SAFETY OR OSHA REQUIREMENTS.
10. ON-SITE GEOTECHNICAL ENGINEER SHALL DETERMINE THE IN-SITU SOIL INFILTRATION RATE OF THE STORMWATER CONTROL MEASURE BOTTOM. BASED ON THE RESULTS, THE DESIGN ENGINEER SHALL DETERMINE IF A LINER WILL BE NEEDED TO MAINTAIN A PERMANENT POOL. UPON DETERMINATION OF HIGHLY PERMEABLE SOILS AND THE SEASONAL HIGH WATER TABLE OUTSIDE OF THE ACCEPTABLE RANGE, THE DESIGN ENGINEER WILL PROVIDE SPECIFICATIONS FOR THE LINER.
11. IT IS ANTICIPATED THAT DEWATERING WILL BE NECESSARY IN THE EXCAVATION AREAS (E.G. - EMBANKMENT SUB GRADE, INTERIOR PORTIONS OF THE STORMWATER CONTROL MEASURE, AND KEY TRENCH). THEREFORE, THE CONTRACTOR SHALL FURNISH, INSTALL, OPERATE, AND MAINTAIN ANY PUMPING EQUIPMENT, ETC. NEEDED FOR REMOVAL OF WATER FROM VARIOUS PARTS OF THE STORMWATER CONTROL MEASURE SITE. DURING PLACEMENT OF FILL WITHIN THESE AREAS, THE CONTRACTOR SHALL KEEP THE WATER LEVEL BELOW THE BOTTOM OF THE EXCAVATION / CONSTRUCTION AREAS. THE MANNER IN WHICH THE WATER IS REMOVED SHALL BE SUCH THAT THE EXCAVATION BOTTOM AND SIDE SLOPES ARE STABLE, WITH NO SEDIMENT DISCHARGED FROM THE SITE (I.E. PUMPED WATER MAY NEED TO BE DIRECTED TO AN APPROVED EROSION CONTROL DEVICE PRIOR TO DISCHARGE).
12. PRIOR TO TOPSOIL INSTALLATION, THE CONTRACTOR SHALL SCARIFY THE TOP 2-3" OF THE BERM SECTION TO PROMOTE BONDING OF THE TOPSOIL WITH THE COMPACTED FILL. THE TOPSOIL DEPTH SHALL RANGE FROM 3-4" ON THE DAM EMBANKMENT AND AQUATIC SHELF. PLEASE NOTE THE TOPSOIL SHALL BE AMENDED AS DIRECTED BY A LANDSCAPE PROFESSIONAL PRIOR TO INSTALLATION ON THE EMBANKMENT AND AQUATIC SHELF.
13. THE CONTRACTOR SHALL PROVIDE A ONE YEAR WARRANTY PERIOD FOR ALL PLANTINGS IN THE STORMWATER CONTROL MEASURE.
14. THE CONTRACTOR SHALL REFER TO THE LANDSCAPING PLAN FOR THE PERMANENT PLANTING PLAN/SCHEDULE FOR THIS FACILITY. CONTRACTOR SHALL COORDINATE WITH A LANDSCAPE PROFESSIONAL REGARDING SCHEDULING FOR PLANT INSTALLATION. PLEASE NOTE THAT NO TREES/SHRUBS OF ANY TYPE MAY BE PLANTED ON FILL AREAS OF THE PROPOSED DAM EMBANKMENT.
15. RETAINING WALL ALIGNMENT SHOWN ON THESE PLANS DEPICTS THE LOCATION OF THE FRONT FACE OF THE RETAINING WALL AT THE BOTTOM.
16. RETAINING WALL IS TO BE A DESIGN-BUILD PROJECT BY THE CONTRACTOR. IT SHALL BE THE CONTRACTOR'S RESPONSIBILITY TO OBTAIN FINAL CONSTRUCTION DRAWINGS FROM A REGISTERED PROFESSIONAL ENGINEER AND GAIN ALL REQUIRED PERMITS NECESSARY FOR THE CONSTRUCTION OF THE RETAINING WALL.
17. RETAINING WALL SHALL BE ASSUMED TO BE BACKFILLED WITH OFF-SITE BORROW MATERIAL OR PROCESSED FILL UNLESS CONTRACTOR CAN PROVIDE OWNER WITH CONFIRMATION FROM THE GEOTECHNICAL ENGINEER AND THE RETAINING WALL DESIGNER THAT READILY AVAILABLE ON-SITE SOILS CAN BE USED.
18. TOP AND BOTTOM OF WALL ELEVATIONS REFERENCED ON THESE PLANS IDENTIFY FINISHED GRADE ELEVATIONS ONLY. THE EXTENT THAT THE RETAINING WALL WILL BE EXTENDED BELOW GRADE TO THE FOOTING SHALL BE IDENTIFIED ON THE RETAINING WALL CONSTRUCTION DRAWINGS.
19. ON-SITE GEOTECHNICAL ENGINEER SHOULD BE GIVEN AN OPPORTUNITY TO REVIEW ALL RETAINING WALL PLANS AND DESIGNS RELEVANT TO GEOTECHNICAL CONSIDERATIONS PRIOR TO FINAL DESIGN OF THE WALLS.

OUTLET STRUCTURE MATERIAL SPECIFICATIONS

1. THE 48"Ø RCP OUTLET BARREL SHALL BE CLASS III O-RING RCP, MODIFIED BELL AND SPIGOT, MEETING THE REQUIREMENTS OF ASTM C76-LATEST. THE PIPES SHALL HAVE SINGLE OFFSET JOINTS MEETING ASTM C-443-LATEST.
2. THE STRUCTURAL DESIGN FOR THE 6' X 6' (INTERNAL DIMENSIONS) RISER BOX WITH EXTENDED BASE SHALL BE BY OTHERS. PRIOR TO ORDERING THE STRUCTURES, THE CONTRACTOR SHALL PROVIDE, TO THE DESIGN ENGINEER FOR REVIEW, SHOP DRAWINGS AND SUPPORTING STRUCTURAL CALCULATIONS SEALED BY A P.E. REGISTERED IN NORTH CAROLINA DEMONSTRATING THE PERTINENT VERTICAL LOADS ARE SUPPORTED BY THE CONCRETE RISER STRUCTURE.
3. THE RISER BOX OUTLET STRUCTURE SHALL BE PROVIDED WITH STEPS 16" ON CENTER. STEPS SHALL BE PROVIDED ON THE INNER WALL OF THE RISER BOX. STEPS SHALL BE IN ACCORDANCE WITH NCDOT STD. 840.66. PLEASE REFER TO SHEET C9.06 FOR LOCATION OF THE RISER STEPS. NOTE THE STEPS SHALL LINE UP WITH THE ACCESS HATCH OF THE TRASH RACK.
4. THE CONCRETE ANTI-FLOTATION BLOCK SHALL BE CAST-IN-PLACE. STEEL REINFORCEMENT AND CONNECTION TO THE RISER SHALL BE PROVIDED IN ACCORDANCE WITH THE DETAIL ON SHEET C9.06. THE CONTRACTOR SHALL ENSURE THE WEIGHT OF THE ENTIRE RISER STRUCTURE IS GREATER THAN OR EQUAL TO 48,445 LBS.
5. THE RISER BOX JOINTS SHALL BE SEALED USING BUTYL RUBBER SEALANT CONFORMING TO ASTM-C990-LATEST. IF NECESSARY, THE CONTRACTOR SHALL INCORPORATE A WATERSTOP INTO THE RISER BOX JOINT TO ENSURE A WATERTIGHT CONNECTION. THE CONTRACTOR SHALL PARGE JOINTS ON BOTH THE INSIDE AND OUTSIDE WITH NON-SHRINK GROUT AND INSTALL GALVANIZED STEEL STRAPS PER DETAIL ON SHEET C9.05.
6. PRIOR TO ORDERING, THE CONTRACTOR SHALL SUBMIT TRASH RACK SHOP DRAWINGS TO THE ENGINEER FOR REVIEW. CONTRACTOR SHALL ENSURE THAT AN ACCESS HATCH IS PROVIDED ON THE TRASH RACK (SEE DETAIL SHEET C9.05 FOR LOCATION) THAT WILL ALLOW FOR FUTURE MAINTENANCE ACCESS. NOTE THE ACCESS HATCH SHALL LINE UP WITH THE ACCESS STEPS AFTER INSTALLATION.
7. ALL POURED CONCRETE SHALL MEET THE FOLLOWING SPECIFICATIONS UNLESS OTHERWISE NOTED:

   -MINIMUM 3000 PSI (28 DAY)
   -SLUMP = 3" - 5"
   -ENTRAINED AIR = 5% - 7%

   PLEASE NOTE NO CONCRETE SHALL BE POURED WHEN THE AMBIENT AIR TEMPERATURES ARE EXPECTED TO BE ABOVE 85°F OR BELOW 40°F. CAST-IN-PLACE CONCRETE SHALL BE "WET CURED" AFTER FINISHING FOR A MINIMUM OF 48 HOURS.

   CAST-IN-PLACE CONCRETE TO BE VIBRATED AS NECESSARY.

   ON-SITE GEOTECHNICAL ENGINEER TO TEST AND CERTIFY ALL POURED CONCRETE MEETS THE ABOVE SPECIFICATIONS. CONCRETE CYLINDERS FOR TESTING TO BE OBTAINED AT TIME OF POURING OF CAST-IN-PLACE STRUCTURES.
8. GEOTEXTILE FABRIC FOR THE 48"Ø RCP OUTLET BARREL JOINTS SHALL BE MIRAFI 180N OR ENGINEER APPROVED EQUAL (NON-WOVEN FABRIC).
9. STORMWATER CONTROL MEASURE EMERGENCY DRAWDOWN IS VIA AN 6"Ø PLUG VALVE. THE VALVE SHALL BE A M&H STYLE 1820 ECCENTRIC VALVE OR APPROVED EQUAL. THIS VALVE IS IN ACCORDANCE WITH AWWA C-517, AND SHALL BE OPERABLE FROM TOP OF OUTLET STRUCTURE VIA A HAND WHEEL (SEE DETAIL SHEET C9.05). THE CONTRACTOR SHALL PROVIDE A REMOVABLE VALVE WRENCH WITH A HAND WHEEL ON TOP FOR OPERATION OF THE 6"Ø PLUG VALVE.

CONSTRUCTION SEQUENCE

1. PRIOR TO CONSTRUCTION, THE OWNER SHALL OBTAIN A LAND DISTURBING (GRADING) PERMIT AND AN "APPROVAL TO CONSTRUCT" FROM THE TOWN OF ROLESVILLE AND ALL OTHER NECESSARY PERMITS FROM APPLICABLE AGENCIES (E.G. 404 / 401 PERMITS).
2. INSTALL ALL SEDIMENT AND EROSION CONTROL MEASURES PER THE APPROVED SEDIMENT AND EROSION CONTROL PLAN. THE CONTRACTOR SHALL MAINTAIN ALL APPROVED SEDIMENT AND EROSION CONTROL MEASURES THROUGHOUT THE ENTIRE PROJECT, AS REQUIRED. THE CONTRACTOR SHALL RECEIVE APPROVAL FROM THE EROSION CONTROL INSPECTOR, AS REQUIRED BY GOVERNING AGENCIES, PRIOR TO ANY CLEARING.
3. CLEAR AND GRUB AREA WITHIN THE LIMITS OF THE PROPOSED DAM CONSTRUCTION, ADHERING TO THE "BERM AND SOIL COMPACTION" NOTES. ALL TREES AND THEIR ENTIRE ROOT SYSTEMS MUST BE REMOVED FROM THE DAM FOOTPRINT AREA AND BACKFILLED WITH SUITABLE SOIL MATERIAL. THE BACKFILLED AREAS SHALL BE COMPACTED TO THE SAME STANDARDS AS THE DAM EMBANKMENT. THE REMAINING AREA OF THE EMBANKMENT SHALL BE STRIPPED TO A SUITABLE DEPTH AS DIRECTED BY THE ON-SITE GEOTECHNICAL ENGINEER. ANY RESIDUAL SOILS TO BE LEFT IN PLACE MUST BE WELL SCARIFIED TO PROMOTE BONDING OF THE NEW EMBANKMENT FILL. NO EMBANKMENT MATERIAL SHALL BE PLACED FOR THE DAM OR KEY TRENCH UNTIL APPROVAL OF THE DAM SUBGRADE IS OBTAINED FROM THE ON-SITE GEOTECHNICAL ENGINEER.
4. EXCAVATE FOR THE NEW KEY TRENCH ALONG THE CENTERLINE OF THE PROPOSED DAM EMBANKMENT. THE TRENCH SHALL EXTEND A MINIMUM OF 5 FT BELOW EXISTING GRADE OR 2 FT BELOW THE 48"Ø RCP OUTLET BARREL AND SHALL HAVE A MINIMUM BOTTOM WIDTH OF 5 FEET. THE KEY TRENCH SIDESLOPES SHALL BE A MINIMUM OF 1:1 (H:V). WHEN EXCAVATING THE KEY TRENCH, IF ANY DEBRIS IS ENCOUNTERED TO AN EXTENT THAT SUCH DEBRIS MAY EXIST IN OTHER INSITU PORTIONS OF THE DAM EMBANKMENT, IT SHOULD ALSO BE REMOVED. THE KEY TRENCH SHALL BE COMPACTED TO THE SAME SPECIFICATION LISTED IN ITEM 4 OF THE "BERM AND SOIL COMPACTION SPECIFICATIONS" NOTES. DEPENDING UPON ON-SITE SOIL CONDITIONS ENCOUNTERED DURING EXCAVATION, THE ON-SITE GEOTECHNICAL ENGINEER MAY VARY THE DEPTH AND DIMENSIONS OF THE KEY TRENCH AS DEEMED NECESSARY. THE ON-SITE GEOTECHNICAL ENGINEER SHALL RETAIN DOCUMENTATION OF ANY VARIATION FOR FUTURE AS-BUILT SUBMITTALS TO THE TOWN OF ROLESVILLE.
5. BEGIN PLACEMENT OF BACKFILL WITHIN THE KEY TRENCH. THE KEY TRENCH SHALL BE COMPACTED TO THE SPECIFICATIONS LISTED IN ITEM 4 OF THE "BERM AND SOIL COMPACTION SPECIFICATIONS" NOTES. THE KEY TRENCH SHALL BE TESTED PER THE SPECIFICATIONS LISTED IN THAT SECTION.
6. CONTRACTOR SHALL GIVE THE DESIGN ENGINEER A MINIMUM OF 72 HOURS NOTICE PRIOR TO THE INSTALLATION OF THE SPILLWAY.
7. PRIOR TO INSTALLATION, SUBGRADE CONDITIONS ALONG THE SPILLWAY PIPES SHOULD BE EVALUATED BY THE ON-SITE GEOTECHNICAL ENGINEER TO ASSESS WHETHER SUITABLE BEARING CONDITIONS EXIST AT THE SUBGRADE LEVEL. SHOULD SOFT OR OTHERWISE UNSUITABLE CONDITIONS BE ENCOUNTERED ALONG THE PIPE ALIGNMENTS, THESE MATERIALS SHOULD BE UNDERCUT AS DIRECTED BY THE GEOTECHNICAL ENGINEER. THE UNDERCUT MATERIALS SHALL BE REPLACED WITH ADEQUATELY COMPACTED STRUCTURAL FILL, LEAN CONCRETE OR FLOWABLE FILL AS DIRECTED BY THE ON-SITE GEOTECHNICAL ENGINEER.
8. IN ORDER TO HELP PROTECT THE SOIL SUBGRADE FROM DETERIORATION (DUE TO EXPOSURE, RAINFALL, SEEPAGE, AND RUNOFF) BEFORE THE CRADLE CAN BE POURED, IT IS STRONGLY RECOMMENDED THAT A 3" TO 4" THICK CONCRETE MUD MAT BE POURED OVER THE SUBGRADE ONCE IT IS APPROVED BY THE ON-SITE GEOTECHNICAL ENGINEER. THE MUD MAT WILL ALSO PROVIDE BEARING FOR THE BLOCKS THAT TEMPORARILY SUPPORT THE SPILLWAY PIPE UNTIL THE CRADLE CAN BE POURED. THE METHOD OF BLOCK SUPPORT FOR THE PIPE PROPOSED BY THE CONTRACTOR SHOULD BE SUBMITTED TO THE JOHN R. McADAMS COMPANY FOR REVIEW.
9. BEGIN CONSTRUCTION OF THE NEW EMBANKMENT. FILL MATERIALS SHALL BE PLACED IN MAXIMUM 8" THICK LIFTS PRIOR TO COMPACTION, UNLESS DIRECTED OTHERWISE BY THE ON-SITE GEOTECHNICAL ENGINEER. FILL LIFTS SHALL BE CONTINUOUS OVER THE ENTIRE LENGTH OF FILL. IF IT IS NECESSARY, THE EMBANKMENT FILL MATERIAL WILL BE OVERBUILT IN HORIZONTAL LIFTS AND CUT BACK TO FINAL GRADE IN ORDER TO ACHIEVE PROPER COMPACTION.
10. AS CONSTRUCTION OF THE EMBANKMENT MOVES FORWARD, IT WILL BE NECESSARY TO INSTALL THE CONCRETE CRADLE. SEE NOTE ON CRADLE DETAIL (SHEET C9.06). THE PROPOSED STRUCTURAL FILL MATERIAL SHALL BE UTILIZED AS THE FORMWORK FOR THE CONCRETE CRADLE. THE STRUCTURAL FILL SHOULD BE INSTALLED AND COMPACTED UP TO THE TOP OF CONCRETE CRADLE ELEVATION. ONCE THE STRUCTURAL FILL REACHES THE NEXT DOWNSTREAM JUNCTION BOX OR HEADWALL AND IS COMPACTED TO THE ELEVATION OF THE TOP OF THE CONCRETE CRADLE, EXCAVATE THE CONCRETE CRADLE TRENCH PER THE PROVIDED DETAILS AND CONSTRUCT THE CONCRETE CRADLE AS PER THE PROVIDED CONCRETE CRADLE DETAIL. THE CRADLE SHALL NOT BE BEDDED ON STONE MATERIAL.
11. INSTALL RISER / BARREL ASSEMBLY, ALONG WITH THE EMERGENCY DRAIN SYSTEM. INSTALL 48" RCP OUTLET BARREL SPILLWAY FILTER FROM THE DETAILS SHOWN ON SHEET C9.05.
12. CONSTRUCT EMBANKMENT PER SPECIFICATIONS LISTED IN THE "BERM AND SOIL COMPACTION SPECIFICATIONS" NOTES AND REQUIREMENTS OF THE ON-SITE GEOTECHNICAL ENGINEER. ALL CHARACTERISTICS OF THE EMBANKMENT FILL MATERIAL SHALL MEET THE STANDARDS SET FORTH IN THE "BERM AND SOIL COMPACTION SPECIFICATIONS" NOTES, INCLUDING COMPACTION AND MOISTURE REQUIREMENTS. IF NECESSARY TO ACHIEVE PROPER COMPACTION, THE EMBANKMENT FILL MATERIAL WILL BE OVERBUILT IN HORIZONTAL LIFTS AND CUT BACK TO PROPER FINAL GRADE. ANY HAND COMPACTION ACTIVITIES AROUND SPILLWAY OR DRAIN STRUCTURES SHALL BE CONDUCTED IN 4-INCH LOOSE LIFTS AND BE TO THE SAME COMPACTION AND MOISTURE REQUIREMENTS AS THE ENTIRE EMBANKMENT. ALL COMPACTION AND MOISTURE TESTING SHALL BE CARRIED OUT AS DIRECTED BY THE ON-SITE GEOTECHNICAL ENGINEER AND AS LISTED IN THE "BERM AND SOIL COMPACTION SPECIFICATIONS" NOTES.
13. UPON COMPLETION OF DAM EMBANKMENT, PROMPTLY STABILIZE AND SEED DAM EMBANKMENT PER SEEDING SCHEDULE. PERMANENT GROUND COVER SHALL BE ESTABLISHED PER THE PERMANENT SEEDING SCHEDULE FOUND ON SHEET C9.07.
14. SCHEDULE A FINAL AS-BUILT INSPECTION AND AS-BUILT SURVEY WITH THE ENGINEER AND SURVEYOR. AN AS-BUILT INSPECTION AND SURVEY SHALL BE SCHEDULED BEFORE IMPOUNDING WATER IN THE FACILITY AND A MINIMUM OF 60 DAYS PRIOR TO THE ANTICIPATED DATE OF CERTIFICATION APPROVAL. ANY COMMENTS OR DEFICIENCIES IN THE SCM CONSTRUCTION MUST BE CORRECTED TO THE SATISFACTION OF THE ENGINEER AND OWNER BEFORE CERTIFICATION SHALL BE GRANTED.

BERM AND SOIL COMPACTION SPECIFICATIONS

1. PRIOR TO CONSTRUCTION, THE ON-SITE GEOTECHNICAL ENGINEER SHALL IDENTIFY BORROW / FILL AREAS AND VERIFY THEIR SUITABILITY FOR USE WITHIN THE DAM EMBANKMENT. ALSO, THE ON-SITE GEOTECHNICAL ENGINEER SHALL PERFORM STANDARD PROCTORS ON THE PROPOSED BORROW MATERIAL TO ENSURE THAT OPTIMUM MOISTURE CONTENT AND COMPACTION CAN BE ACHIEVED / CONTROLLED DURING CONSTRUCTION.
2. ALL FILL MATERIALS TO BE USED FOR THE DAM EMBANKMENT SHALL BE TAKEN FROM BORROW AREAS APPROVED BY THE ON-SITE GEOTECHNICAL ENGINEER. THE FILL MATERIAL SHALL BE FREE FROM ROOTS, STUMPS, WOOD, STONES GREATER THAN 6", AND FROZEN OR OTHER OBJECTIONABLE MATERIAL. THE FOLLOWING SOIL TYPES ARE SUITABLE FOR USE AS FILL WITHIN THE DAM EMBANKMENT AND KEY TRENCH: ML AND CL. ALL FILL MATERIALS SHALL BE APPROVED BY THE ONSITE GEOTECHNICAL ENGINEER FOR THE INTENDED USE.
3. FILL PLACEMENT FOR THE EMBANKMENT SHALL NOT EXCEED A MAXIMUM 8" LIFT (UNCOMPACTED). EACH LIFT SHALL BE CONTINUOUS FOR THE ENTIRE LENGTH OF EMBANKMENT. BEFORE PLACEMENT OF FILL FOR THE BERM SECTION, ALL UNSUITABLE MATERIAL SHALL BE REMOVED AND THE SURFACE PROPERLY PREPARED FOR FILL PLACEMENT. FILL MATERIAL ADJACENT TO ALL SPILLWAY AND DRAINAGE STRUCTURES SHALL BE PLACED IN 4-INCH (UNCOMPACTED) LIFTS AND HAND-COMPACTED TO THE SAME COMPACTION AND MOISTURE REQUIREMENTS AS THE ENTIRE EMBANKMENT.
4. ALL FILL SOILS USED IN THE EMBANKMENT CONSTRUCTION SHALL BE COMPACTED TO AT LEAST 95% OF THE STANDARD PROCTOR MAXIMUM DRY DENSITY (ASTM D-698). THE FILL SOILS SHALL BE COMPACTED AT A MOISTURE CONTENT WITHIN -1 TO +3 PERCENT OF ITS OPTIMUM MOISTURE CONTENT. COMPACTION TESTS SHALL BE PERFORMED BY THE ON-SITE GEOTECHNICAL ENGINEER DURING CONSTRUCTION TO VERIFY THAT THE PROPER COMPACTION LEVEL HAS BEEN REACHED. THE FILL SHOULD BE COMPACTED USING A SHEEPSFOOT TYPE COMPACTOR. IN ORDER TO PREVENT DAMAGE TO THE PIPE, NO COMPACTION EQUIPMENT SHALL CROSS ANY PIPE UNTIL MINIMUM COVER IS ESTABLISHED ALONG THE PIPE.
5. THE DESIGN ENGINEER SHALL BE PROVIDED WITH REPORTS AND CERTIFICATION BY THE ON-SITE GEOTECHNICAL ENGINEER THAT THE GEOTECHNICAL ASPECTS OF THE FACILITY HAVE BEEN CONSTRUCTED PER PLAN. THIS CERTIFICATION MUST ADDRESS THE TESTING FOR MATERIALS AND COMPACTION OF THE DAM EMBANKMENT AND SPILLWAY. THESE REPORTS AND CERTIFICATION WILL BE NEEDED DURING THE AS-BUILT CERTIFICATION PROCESS FOR THIS STORMWATER CONTROL MEASURE. THEREFORE, IT SHALL BE THE CONTRACTOR'S RESPONSIBILITY TO COORDINATE TESTING AND OBSERVATION WITH THE ON-SITE GEOTECHNICAL ENGINEER.
6. TESTING OF THE NEW FILL MATERIALS SHALL BE PERFORMED TO VERIFY THAT THE RECOMMENDED LEVEL OF COMPACTION IS ACHIEVED DURING CONSTRUCTION. THEREFORE, ONE DENSITY TEST SHALL BE PERFORMED FOR EVERY 2,500 SQUARE FEET OF AREA FOR EVERY LIFT OF FILL OR AS RECOMMENDED BY THE ON-SITE GEOTECHNICAL ENGINEER.
7. TESTING WILL BE REQUIRED ALONG THE 48"Ø RCP OUTLET BARREL AT A FREQUENCY OF ONE TEST PER 25 LF OF PIPE PER VERTICAL FOOT OF FILL OR AS DIRECTED BY THE ON-SITE GEOTECHNICAL ENGINEER.

STATEMENT OF RESPONSIBILITY

1. ALL REQUIRED MAINTENANCE AND INSPECTIONS OF THE STORMWATER CONTROL MEASURE SHALL BE THE RESPONSIBILITY OF THE OWNER, PER THE EXECUTED OPERATION AND MAINTENANCE AGREEMENT FOR THIS FACILITY.

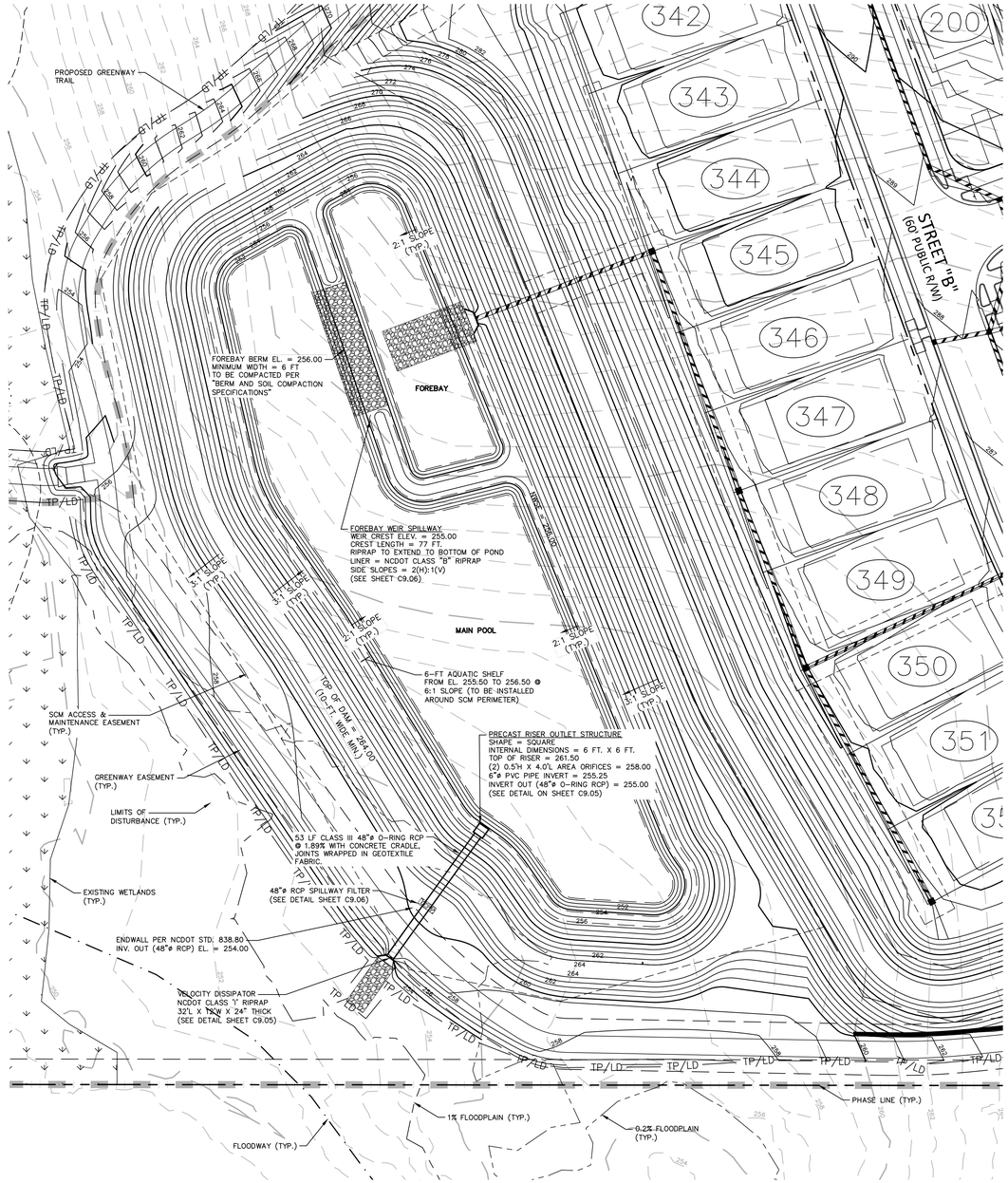

STORMWATER WETPOND 'B' PLAN VIEW

1" = 40'

GRAPHIC SCALE

0 20 40 80

1 inch = 40 ft.

FINAL DRAWING - NOT RELEASED FOR CONSTRUCTION

McADAMS
The John R. McAdams Company, Inc.
2905 Meridian Parkway
Durham, NC 27713

phone 919. 361. 5000
fax 919. 361. 2269
license number: C-0293, C-187

www.mcadamsco.com

CLIENT

ALLIANCE GROUP OF NC, LLC
7208 FALLS OF NEUSE RD, SUITE 101
RALEIGH, NORTH CAROLINA 27615
CONTACT: JACOB ANDERSON
PHONE: 919. 239. 9486

AGNC BROKERAGE | CONSULTING | PLANNING

PEARCE FARM - PHASES 1-3
CONSTRUCTION DRAWINGS - PACKAGE 1
BURLINGTON MILLS ROAD
TOWN OF ROLESVILLE, NORTH CAROLINA

CID-24-08

NORTH CAROLINA PROFESSIONAL ENGINEER SEAL 054404 ENGINEER MARIA C. TORRES — NOT FOR CONSTRUCTION

REVISIONS

NO.	DATE	
1	02. 03. 2025	REVISED PER TOWN, CITY AND COUNTY COMMENTS

PLAN INFORMATION

PROJECT NO.	AGN23001
FILENAME	AGN23001-SCMB
CHECKED BY	MCT
DRAWN BY	MMJ
SCALE	1"=40'
DATE	12. 02. 2024

SHEET

SCM B
PLAN VIEW
C9.04

X:\Projects\AGN\AGN23001\04-Production\Water Resources\Stormwater Management\Site Plan\Full Buildout Model\Current Drawing\AGN23001-SCMB.dwg, 1/31/2025 1:32:15 PM, Mirabelle Javellana

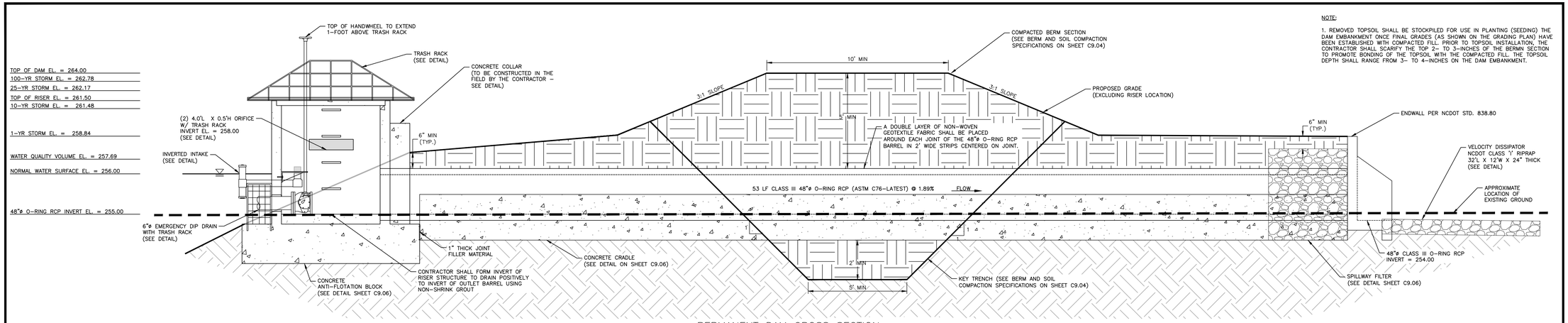

PERMANENT DAM CROSS SECTION
N.T.S.

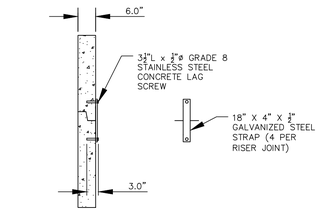

RISER JOINT CONNECTION DETAIL
N.T.S.

NOTES:

1. CONCRETE ANTI-FLOTATION BLOCK TO BE PROVIDED WITH MINIMUM TEMPERATURE AND SHRINKAGE STEEL REINFORCEMENT.

2. TRASH RACKS NOT SHOWN FOR CLARITY.

3. THE NUMBER OF GUIDES FOR THE VALVE STEM SHALL BE DETERMINED IN THE FIELD BY THE CONTRACTOR. THE VALVE STEM MUST BE OPERABLE FROM THE TOP OF THE RISER VIA THE HANDWHEEL WITH AN INSIGNIFICANT AMOUNT OF PLAY IN THE VALVE STEM.

4. CONTRACTOR SHALL PROVIDE A JOINT IN THE OUTLET BARREL NO MORE THAN 5-FT FROM THE RISER.

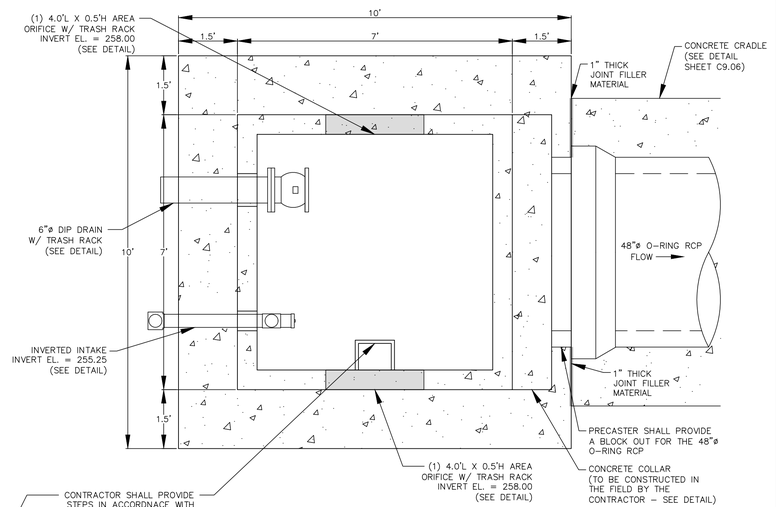

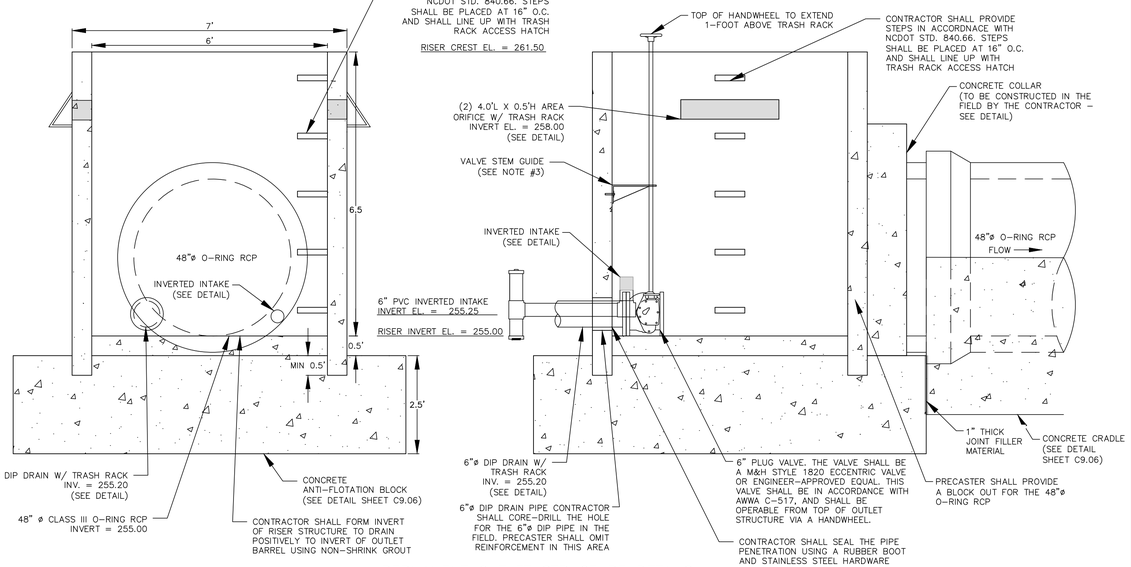

PERMANENT OUTLET STRUCTURE DETAILS
N.T.S.

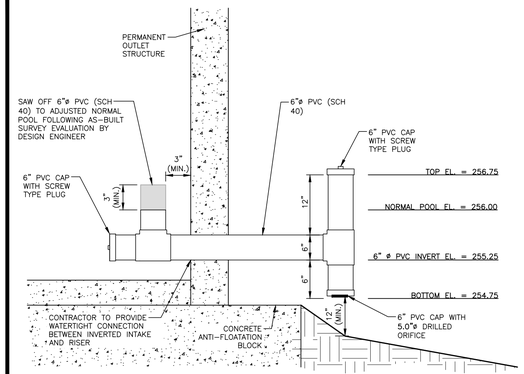

INVERTED INTAKE OUTLET DETAIL
N.T.S.

NOTES:

1. ATTACH TRASH RACK WITH (4) HOT DIPPED GALVANIZED STEEL CLAMPS. EACH CLAMP ATTACHED TO WEIR BOX BY (2) 4"x1/4" CONCRETE ANCHOR BOLTS. EACH CLAMP SHALL BE COATED WITH AN EPOXY COATING.
2. ALL REBAR TO BE GALVANIZED #4 REBAR WITH AN EPOXY COATING.
3. BARS TO EXTEND ON BOTTOM OF TRASH RACK.

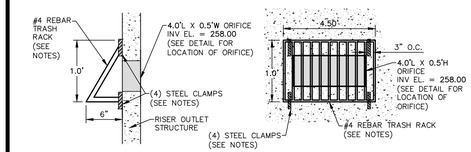

AREA ORIFICE TRASH RACK DETAIL
N.T.S.

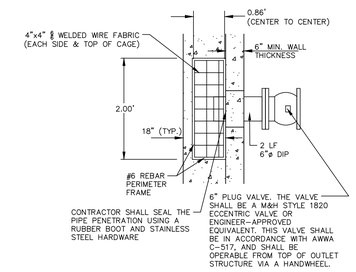

6"ø EMERGENCY DIP DRAIN TRASH RACK DETAILS
N.T.S.

NOTES:

1. A FILTER BLANKET IS TO BE INSTALLED BETWEEN THE RIPRAP AND SOIL FOUNDATION. THE FILTER BLANKET WILL CONSIST OF A MINIMUM 4" THICK LAYER OF STONE (NCDOT #57) UNDERLAIN WITH MIRAFI FILTER WEAVE 700 OR ENGINEER-APPROVED EQUIVALENT.

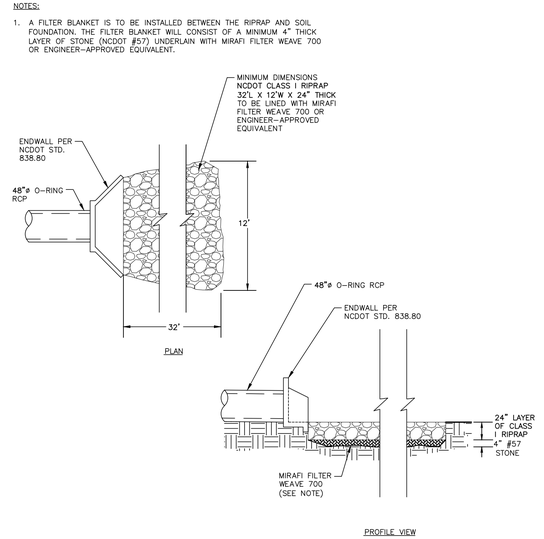

OUTLET BARREL VELOCITY DISSIPATOR
N.T.S.

FINAL DRAWING - NOT RELEASED FOR CONSTRUCTION

X:\Projects\AGN\AGN23001\04-Production\Water Resources\Stormwater Management\Site Plan\Full Buildout Model\Current Drawings\AGN23001-SCMB.dwg, 1/30/2025 3:34:05 PM, Mirabelle Javillana

McADAMS
The John R. McAdams Company, Inc.
2905 Meridian Parkway
Durham, NC 27713

phone 919. 361. 5000
fax 919. 361. 2269
license number: C-0293, C-187

www.mcadamsco.com

CLIENT

ALLIANCE GROUP OF NC, LLC
7208 FALLS OF NEUSE RD, SUITE 101
RALEIGH, NORTH CAROLINA 27615
CONTACT: JACOB ANDERSON
PHONE: 919. 239. 9486

AGNC BROKERAGE | CONSULTING | PLANNING

PEARCE FARM - PHASES 1-3
CONSTRUCTION DRAWINGS - PACKAGE 1
BURLINGTON MILLS ROAD
TOWN OF ROLESVILLE, NORTH CAROLINA

CID-24-08

NORTH CAROLINA PROFESSIONAL ENGINEER SEAL 054404 MARIA C. TORRES — NOT FOR CONSTRUCTION

REVISIONS

NO.	DATE	
1	02. 03. 2025	REVISED PER TOWN, CITY AND COUNTY COMMENTS

PLAN INFORMATION

PROJECT NO.	AGN23001
FILENAME	AGN23001-SCMB
CHECKED BY	MCT
DRAWN BY	MMJ
SCALE	N.T.S.
DATE	12. 02. 2024

SHEET

SCM B DETAILS
C9.05

STATE OF NORTH CAROLINA
DEPT. OF TRANSPORTATION
DIVISION OF HIGHWAYS
RALEIGH, N.C.

7-06

ENGLISH STANDARD DRAWING FOR

DRAINAGE STRUCTURE STEPS

SHEET 1 OF 1

840.66

NOTES:
INSTALL ALL STEPS PROTRUDING 4" FROM INSIDE FACE OF STRUCTURE WALL.
STEPS DIFFERING IN DIMENSIONS, CONFIGURATION, OR MATERIALS FROM THOSE SHOWN MAY ALSO BE USED PROVIDED THE CONTRACTOR HA
THE ENGINEER WITH DETAILS OF THE PROPOSED STEPS AND HAS RECEIVED WRITTEN APPROVAL FROM THE ENGINEER FOR THE USE OF SUCH

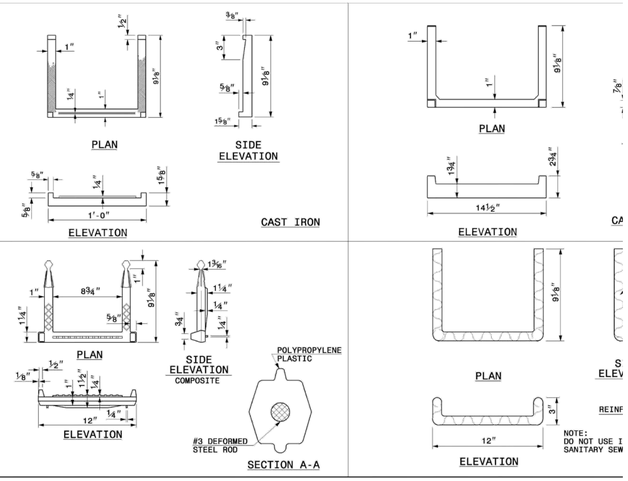

NOTES:
1. ALL REBAR TO BE #4 REBAR.
2. ALL REBAR AND ANGLES TO BE HOT-DIPPED GALVANIZED AND BE PROVIDED WITH AN EPOXY COATING.
3. THE HOT-DIPPED, GALVANIZED 2"x2"x1/4" ANGLES SHALL BE WELDED TO THE REBAR TRASH RACK. ONCE WELDED, THE ENTIRE ASSEMBLY SHALL BE PLACED ONTO THE RISER WITH ANGLES SITTING DIRECTLY ON TOP OF RISER.
4. TRASH RACK IS TO BE SECURELY FASTENED TO THE SPILLWAY RISER WITH A MINIMUM OF FOUR CORROSION-RESISTANT ANCHORS.
5. ACCESS HATCH SHALL ALIGN WITH STEPS IN RISER.

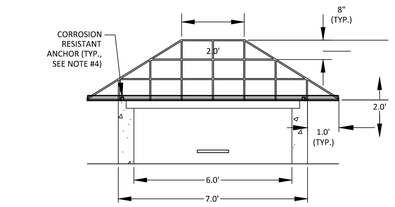

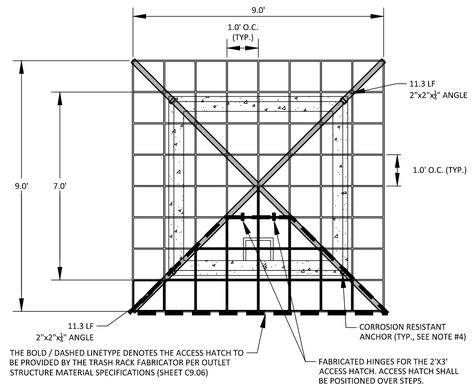

6'X6' RISER TRASH RACK DETAIL
N.T.S.

NOTE:
1. HAVILAND DRAINAGE PRODUCTS 4" ALUMINUM ANIMAL GUARD ITEM NUMBER AGSS04 (OR ENGINEER APPROVED EQUIVALENT) TO BE INSTALLED AT OUTLET OF 4" HDPE PIPES

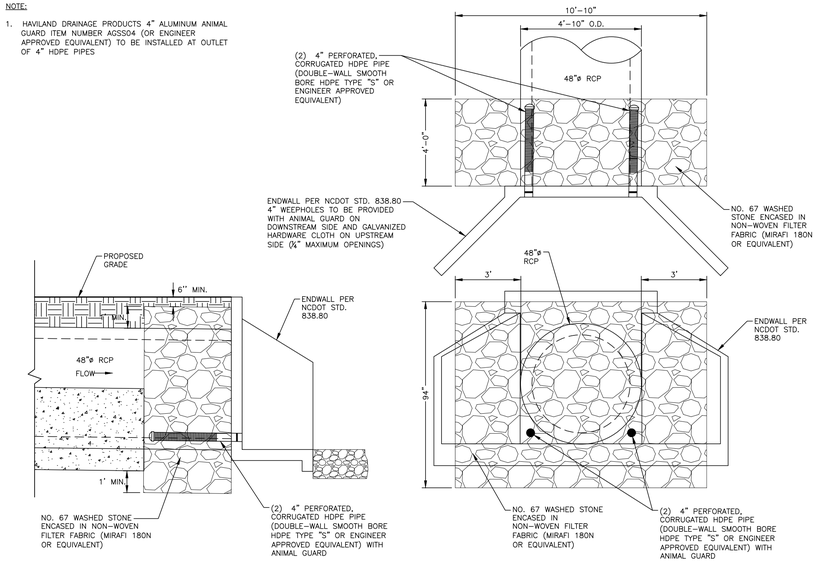

48" SPILLWAY FILTER DETAIL
N.T.S.

NOTE: RIPRAP TO EXTEND FROM TOE OF FOREBAY TO TOE OF MAIN POOL

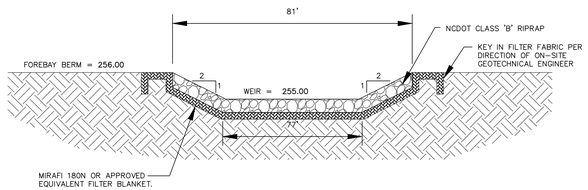

FOREBAY WEIR SPILLWAY CROSS-SECTION
N.T.S.

NOTE:
1. CONTRACTOR SHALL PROVIDE A JOINT IN THE OUTLET BARREL NO MORE THAN 5-FT FROM THE RISER.

BARREL PIPE CONCRETE CRADLE CONSTRUCTION SEQUENCE

1. BRING GRADE OF DAM EMBANKMENT TO SPRINGLINE OF PIPE ELEVATION.
2. EXCAVATE TRENCH FOR CRADLE AND BARREL PER DIMENSIONS ON DRAWINGS.
3. PLACE BARREL PIPE ON CONCRETE BLOCKS TO GRADE. AT THIS STEP, CONTRACTOR SHALL WRAP A DOUBLE LAYER OF NON-WOVEN GEOTEXTILE FABRIC AROUND EACH JOINT OF THE **48"ø** O-RING RCP BARREL IN 2' WIDE STRIPS CENTERED ON JOINT.
4. PLACE CONCRETE FOR CRADLE FOR EACH SECTION FROM ONE SIDE OF THE TRENCH. ALLOW CONCRETE TO FILL ENTIRE AREA UNDER PIPE AND PIPE HAUNCHES AS TO LEAVE NO VOIDS UNDER THE PIPE BEFORE PLACING CONCRETE ON THE OPPOSITE SIDE OF THE TRENCH. PLACE ENTIRE CRADLE AS ONE LIFT (VERTICALLY) PER DRAWINGS.
5. ALLOW CRADLE TO CURE FOR A MINIMUM OF 7 DAYS BEFORE ANY VIBRATING COMPACTION EQUIPMENT IS USED IN THE VICINITY OF THE BARREL PIPE.
6. TRENCH TO BE BACKFILLED IN 5" LIFTS WHEN COMPACTION IS BY HAND. BACKFILL IS IN 8" LIFTS WHEN CONDUCTED BY MACHINE. MINIMUM OF 2 FEET COVER MUST BE PRESENT ON **48"ø** RCP BEFORE DRIVING OVER WITH HEAVY EQUIPMENT.

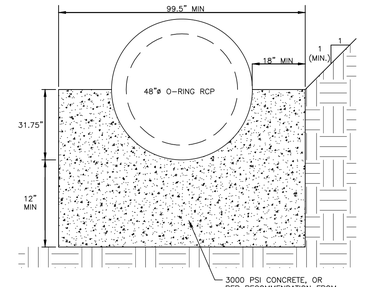

48" CONCRETE CRADLE DETAIL
N.T.S.

NOTES:
1. ALL REINFORCING STEEL IN RISER ANTI-FLOTATION BLOCK TO BE GRADE 60 **#4** BARS FOR HORIZONTAL CROSSING AND GRADE 60 **#4** BARS FOR VERTICAL CONNECTIONS.
2. INSIDE OF RISER BOTTOM TO BE FORMED WITH NON-SHRINK GROUT TO INVERT ELEVATION OF BARREL.
3. ALL PIPE PENETRATIONS THROUGH THE CONCRETE RISER STRUCTURE SHALL BE MADE WATERTIGHT.

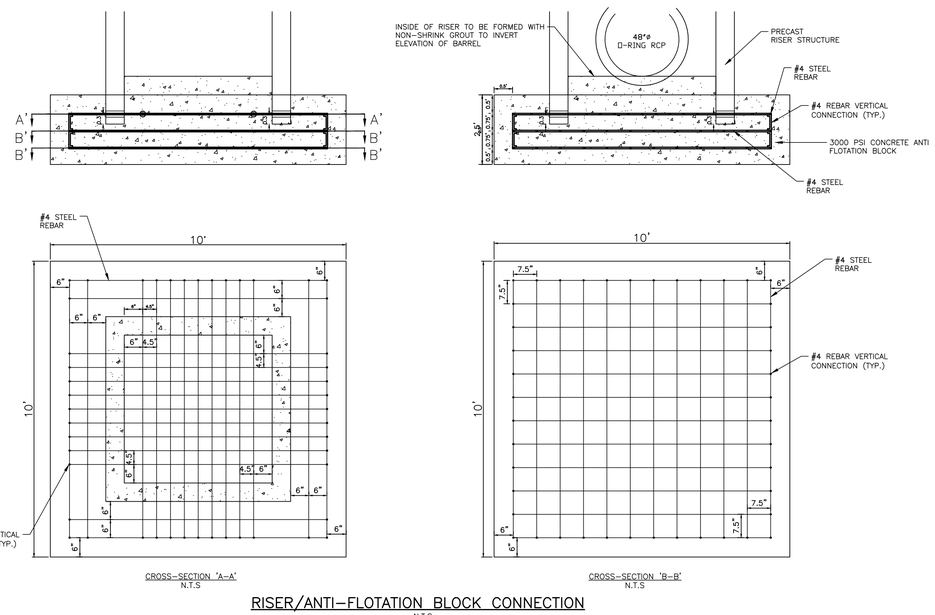

CROSS-SECTION 'A-A'
N.T.S

CROSS-SECTION 'B-B'
N.T.S

RISER/ANTI-FLOTATION BLOCK CONNECTION
N.T.S.

NOTES:
1. ALL REBAR TO BE **#4** REBAR.
2. WRAP OUTSIDE OF PIPE WITH VOLCLAY WATERSTOP-RX® 101 (OR PRE-APPROVED EQUIVALENT) AT THE FACE OF THE PRECAST STRUCTURE WALL. PROVIDE 6" OVER LAP ON THE BOTTOM OF THE PIPE.

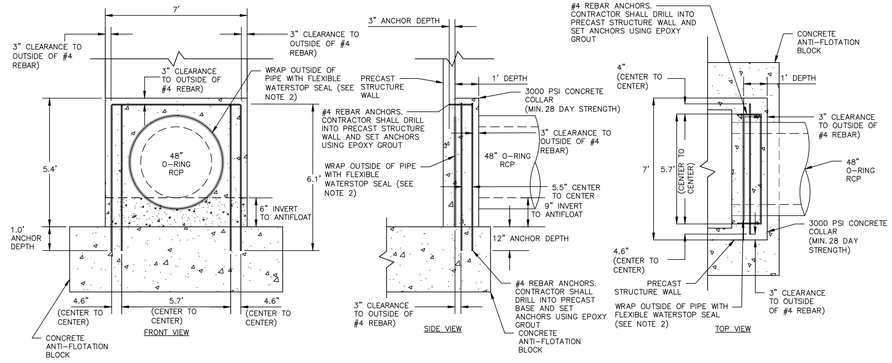

48"ø CONCRETE COLLAR DETAIL
N.T.S.

FINAL DRAWING - NOT RELEASED FOR CONSTRUCTION

McADAMS
The John R. McAdams Company, Inc.
2905 Meridian Parkway
Durham, NC 27713

phone 919. 361. 5000
fax 919. 361. 2269
license number: C-0293, C-187

www.mcadamsco.com

CLIENT

ALLIANCE GROUP OF NC, LLC
7208 FALLS OF NEUSE RD, SUITE 101
RALEIGH, NORTH CAROLINA 27615
CONTACT: JACOB ANDERSON
PHONE: 919. 239. 9486

AGNC BROKERAGE | CONSULTING | PLANNING

PEARCE FARM - PHASES 1-3
CONSTRUCTION DRAWINGS - PACKAGE 1
BURLINGTON MILLS ROAD
TOWN OF ROLESVILLE, NORTH CAROLINA

CID-24-08

NORTH CAROLINA PROFESSIONAL ENGINEER SEAL 054404 MARIA C. TORRES — NOT FOR CONSTRUCTION

REVISIONS

NO.	DATE	
1	02. 03. 2025	REVISED PER TOWN, CITY AND COUNTY COMMENTS

PLAN INFORMATION

PROJECT NO.	AGN23001
FILENAME	AGN23001-SCMB
CHECKED BY	MCT
DRAWN BY	MMJ
SCALE	N.T.S.
DATE	12. 02. 2024

SHEET

SCM B DETAILS

C9.06

X:\Projects\AGN\AGN23001\04-Production\Water Resources\Stormwater Management\Site Plan\Full Buildout Model\Current Drawings\(AGN23001-SCMB.dwg, 1/30/2025 3:34:17 PM, Mirabelle Javellana

STORMWATER CONTROL MEASURE 'B' PLANTING PLAN SPECIFICATIONS

PLANT SCHEDULE

SYMBOL	CODE	QTY	COMMON NAME	BOTANICAL NAME	CONT	REMARKS
GROUND COVERS						
	AISM	348	Swamp Milkweed	Asclepias incarnata	4" pot	Shallow Land
	IVBF	371	Blue Flag Iris	Iris virginica	4" pot	Shallow Water
	LCCF	374	Cardinal Flower	Lobelia cardinalis	4" pot	Shallow Land
	LELL	358	Longleaf Lobelia	Lobelia elongata	4" pot	Shallow Water
	PCPW	375	Pickerel Weed	Pontederia cordata	4" pot	Shallow Water
	STSB	375	Softstem Bulrush	Schoenoplectus tabernaemontani	4" pot	Shallow Water

SEEDBED PREPARATION

1. CHISEL COMPACTED AREAS AND SPREAD TOPSOIL 3-4 INCHES DEEP OVER ADVERSE SOIL CONDITIONS. TOPSOIL SHOULD BE INCORPORATED INTO THE FINAL GRADING OF THE BASIN SIDE SLOPES AND SHALLOW LAND AND SHALLOW WATER AREAS. CONTRACTOR SHOULD SCARIFY THE TOP 3-4 INCHES OF THE COMPACTED FILL TO PROMOTE BONDING WITH TOPSOIL.
2. RIP THE ENTIRE AREA TO 6 INCHES DEPTH.
3. REMOVE ALL LOOSE ROCK, ROOTS, AND OTHER OBSTRUCTIONS LEAVING SURFACE REASONABLY SMOOTH AND UNIFORM.
4. PER ONE TIME ONLY, APPLY AGRICULTURAL LIME, FERTILIZER, AND SUPERPHOSPHATE UNIFORMLY AND MIX WITH SOIL.
5. CONTINUE TILLAGE UNTIL A WELL-PULVERIZED, FIRM REASONABLY UNIFORM SEEDBED IS PREPARED 4 TO 6 INCHES DEEP.
6. SEED ON A FRESHLY PREPARED SEEDBED AND COVER.
7. MULCH IMMEDIATELY AFTER SEEDING AND ANCHOR MULCH.
8. INSPECT ALL SEEDED AREAS AND MAKE NECESSARY REPAIRS OR RESEEDINGS WITHIN THE PLANTING SEASON, IF POSSIBLE. AFTER PERMANENT COVER IS ESTABLISHED.
9. CONSULT CONSERVATION INSPECTOR ON MAINTENANCE TREATMENT.

TEMPORARY SEEDING SCHEDULE

SEEDING DATE	SEEDING MIXTURE	APPLICATION RATE
JAN 1 - MAY 1	RYE (GRAIN)	120 LBS/AC
	KOBE LESPEDEZA	50 LBS/AC
MAY 1 - AUG 15	GERMAN MILLET	40 LBS/AC
AUG 15 - DEC 30	RYE (GRAIN)	120 LBS/AC

SOIL AMENDMENTS
FOLLOW RECOMMENDATIONS OF SOIL TESTS OR APPLY 2,000 LB/AC GROUND AGRICULTURE LIMESTONE AND 750 LB/AC 10-10-10 FERTILIZER (FROM AUG 15 - DEC 30, INCREASE 10-10-10 FERTILIZER TO 1000 LB/AC).

MULCH
APPLY 4000 LB/AC STRAW. ANCHOR STRAW BY TACKING WITH ASPHALT, NETTING, OR A MULCH ANCHORING TOOL. A DISK WITH BLADES SET NEARLY STRAIGHT CAN BE USED AS A MULCH ANCHORING TOOL.

MAINTENANCE
JAN 1 - AUG 15: REFERTILIZE IF GROWTH IS NOT FULLY ADEQUATE. RESEED, REFERTILIZE, AND MULCH IMMEDIATELY FOLLOWING EROSION OR OTHER DAMAGE.

AUG 15 - DEC 30: REPAIR AND REFERTILIZE DAMAGED AREAS IMMEDIATELY. TOP DRESS WITH 50 LB/AC OF NITROGEN IN MARCH. IF IT IS NECESSARY TO EXTEND TEMPORARY COVER BEYOND JUNE 15, OVERSEED WITH 50 LB/AC KOBE LESPEDEZA IN LATE FEBRUARY OR EARLY MARCH.

NOTE: USE THE TEMPORARY SEEDING SCHEDULE ONLY WHEN DATE IS NOT CORRECT TO USE THE PERMANENT SEEDING SCHEDULE.

PERMANENT SEEDING SCHEDULE (DAM EMBANKMENTS)

SEEDING DATE	SEEDING MIXTURE	APPLICATION RATE
MARCH 1 - JUNE 31	HYBRID BERMUDA GRASS	1 LBS/1000 SF (OR MANUFACTURER SPECIFICATIONS)
SEPT 1 -OCT 31		1 LBS/1000 SF (OR MANUFACTURER SPECIFICATIONS)

SOIL AMENDMENTS
FOLLOW RECOMMENDATIONS OF SOIL TESTS OR APPLY 4,000 LB/AC GROUND AGRICULTURE LIMESTONE AND 1000 LB/AC 10-10-10 FERTILIZER.

MULCH
APPLY 4000 LB/AC STRAW. ANCHOR STRAW BY TACKING WITH ASPHALT, NETTING, OR A MULCH ANCHORING TOOL. A DISK WITH BLADES SET NEARLY STRAIGHT CAN BE USED AS A MULCH ANCHORING TOOL.

MAINTENANCE
INSPECT AND REPAIR MULCH FREQUENTLY. REFERTILIZE IN LATE WINTER OF THE FOLLOWING YEAR; USE SOIL TESTS OR APPLY 150 LB/AC 10-10-10 FERTILIZER. MOW REGULARLY TO A HEIGHT OF 2-4 INCHES.

NOTE: PERMANENT SEEDING SCHEDULE IS FOR SLOPES OF THE BASIN AND TOP OF BERM.

PLANTING INSTRUCTIONS

PLANTING TECHNIQUES
A. INSURE THAT ROOTS, ONCE REMOVED FROM POT, ARE STRAIGHTENED AND FACE DOWNWARD.
B. CREATE PLANTING AREA FOR EACH PLANT AND EXCAVATE PIT.
C. PLACE PLANTS IN PIT INSURING ROOTS ARE FACING COMPLETELY DOWNWARD.
D. HEEL IN SOIL AROUND PLANT AND PROCEED TO NEXT PLANTING LOCATION.
E. NEWLY PLANTED PLANTS NEED TO BE FASTENED TO THE SUBSTRATE FOR THE ESTABLISHMENT OF NEW ROOTS.
F. ROOTS SHALL BE SPREAD IN THEIR NORMAL POSITION. ALL BROKEN OR FRAYED ROOTS HALL BE CUT OFF CLEANLY.
G. THE DIAMETER OF THE PITS FOR ALL VEGETATIVE STOCK SHALL BE AT LEAST THREE TIMES THE DIAMETER OF THE ROOT MASS. PLANT PIT WALL SHALL BE SCARIFIED PRIOR TO PLANT INSTALLATION.
H. SET THE PLANTS UPRIGHT, IN THE CENTER OF THE PIT. THE BOTTOM OF THE ROOT MASS SHOULD BE RESTING ON UNDISTURBED SOIL.
I. PLACE THE BACKFILL AROUND THE BASE AND SIDES OF THE ROOT MASS, AND WORK EACH LAYER TO SETTLE BACKFILL AND TO ELIMINATE VOIDS AND AIR POCKETS. WHEN PIT IS APPROXIMATELY 2/3 FULL, WATER THOROUGHLY BEFORE PLACING REMAINDER OF THE BACKFILL. WATER AGAIN AFTER PLACING FINAL LAYER OF BACKFILL.
J. BROKEN OR DAMAGED PARTS WILL BE CUT BACK TO UNDAMAGED TISSUE, LEAVING AS MUCH GREEN BASAL TISSUE AS POSSIBLE ABOVE THE ROOTS. IF MORE THAN FIFTY PERCENT (50%) OF THE PLANT IS DAMAGED THEN CONTRACTOR SHALL REPLACE THE PLANT.

CONTAINER STOCK / BARE ROOT
A. STOCK SHALL HAVE BEEN GROWN IN A CONTAINER LONG ENOUGH FOR THE ROOT SYSTEM TO HAVE DEVELOPED SUFFICIENTLY TO HOLD ITS SOIL TOGETHER ONCE REMOVED FROM THE CONTAINER.
B. CONTAINER PLANTS WILL NEED TO BE WATERED REGULARLY AND PLACED IN SHADY CONDITIONS UNTIL PLANTING OCCURS.
C. BARE ROOT PLANTS ARE FOR IMMEDIATE PLANTING, OTHERWISE SEE D) BELOW.
D. IF BARE ROOTS SPECIMENS ARE NOT TO BE PLANTED WITHIN FOUR (4) DAYS, TEMPORARY HOLDING OF BARE ROOT SPECIMENS ARE TO BE COVERED ENTIRELY BY A SUITABLE MEDIUM (ETC. SOIL, SAWDUST, MULCH OR THE LIKE) AND WATERED REGULARLY SO AS TO NOT DRY OUT.

PLANT LOCATIONS
A. NEW PLANTINGS SHALL BE LOCATED WHERE SHOWN ON PLAN EXCEPT WHERE CHANGES HAVE BEEN MADE IN PROPOSED CONSTRUCTION.
B. NECESSARY ADJUSTMENTS SHALL BE MADE ONLY AFTER APPROVAL BY THE OWNER OR THE OWNER'S REPRESENTATIVE.

WATER
WATER SHALL BE POTABLE AND SHALL NOT CONTAIN ELEMENTS TOXIC TO PLANT LIFE.

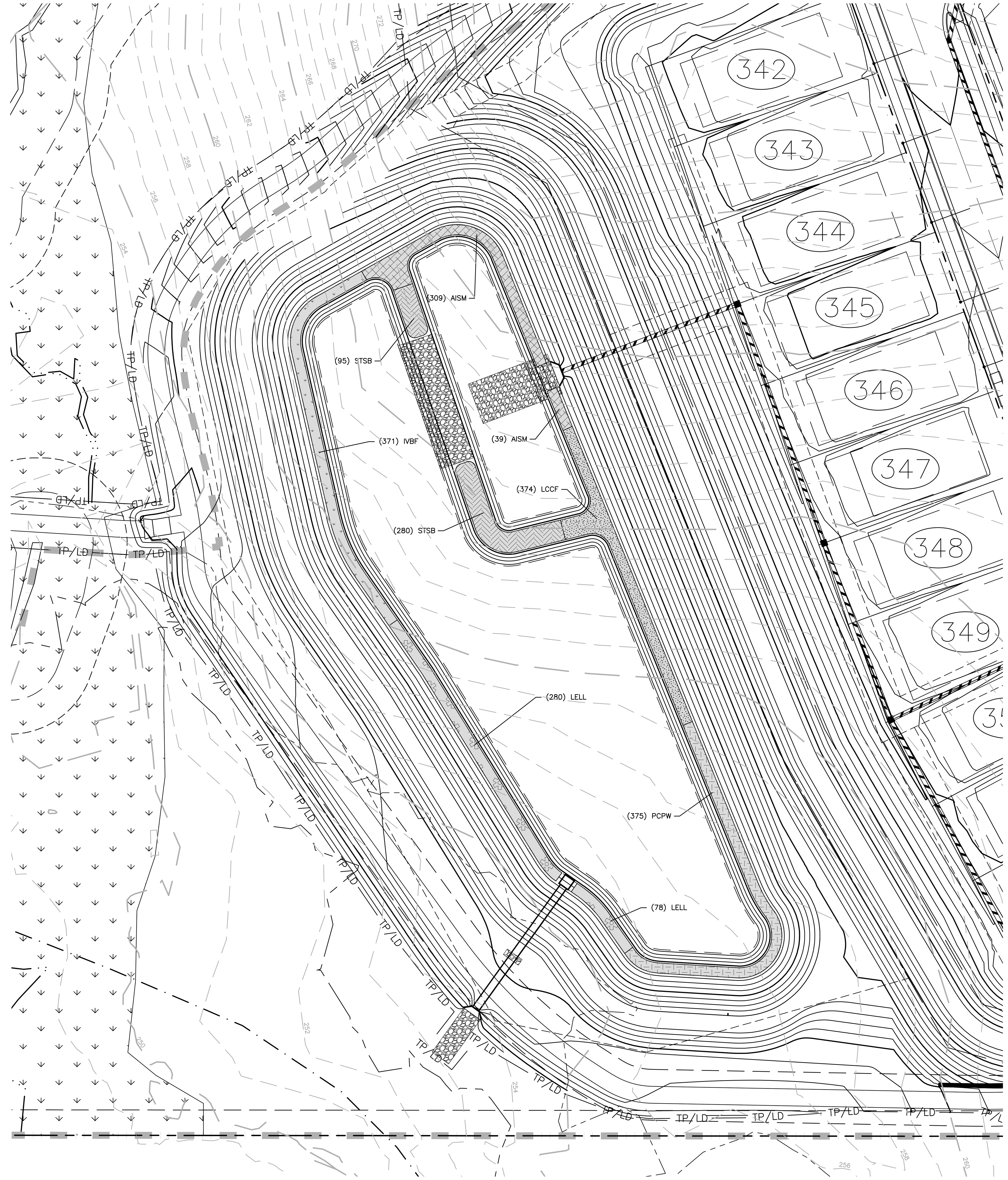

STORMWATER WETPOND 'B' LANDSCAPE PLAN
1" = 40'

GRAPHIC SCALE
0 20 40 80
1 inch = 40 ft.

FINAL DRAWING - NOT RELEASED FOR CONSTRUCTION

MCADAMS
The John R. McAdams Company, Inc.
2905 Meridian Parkway
Durham, NC 27713

phone 919. 361. 5000
fax 919. 361. 2269
license number: C-0293, C-187

www.mcadamsco.com

CLIENT

ALLIANCE GROUP OF NC, LLC
7208 FALLS OF NEUSE RD, SUITE 101
RALEIGH, NORTH CAROLINA 27615
CONTACT: JACOB ANDERSON
PHONE: 919. 239. 9486

AGNC
BROKERAGE | CONSULTING | PLANNING

PEARCE FARM - PHASES 1-3
CONSTRUCTION DRAWINGS - PACKAGE 1
BURLINGTON MILLS ROAD
TOWN OF ROLESVILLE, NORTH CAROLINA

CID-24-08

NORTH CAROLINA PROFESSIONAL SEAL 054404 ENGINEER MARIA C. TORRES
PRELIMINARY NOT FOR CONSTRUCTION

REVISIONS

NO.	DATE	
1	02. 03. 2025	REVISED PER TOWN, CITY AND COUNTY COMMENTS

PLAN INFORMATION

PROJECT NO.	AGN23001
FILENAME	AGN23001-SCMB
CHECKED BY	MCT
DRAWN BY	MMJ
SCALE	1" = 40'
DATE	12. 02. 2024

SHEET

SCM B LANDSCAPE PLAN

C9.07

X:\Projects\AGN\AGN23001\04-Production\Water Resources\Stormwater Management\Site Plan\Full Buildout Model\Current Drawings\AGN23001-SCMB.dwg, 1/31/2025 1:36:05 PM, Mirabelle Javellana

STORMWATER CONTROL MEASURE 'G' CONSTRUCTION SPECIFICATIONS

GENERAL NOTES

1. PRIOR TO CONSTRUCTION, ANY DISCREPANCIES IN THE PLANS AND NOTES SHALL BE BROUGHT TO THE DESIGN ENGINEER'S ATTENTION IMMEDIATELY. IF THE CONTRACTOR, IN THE COURSE OF WORK, FINDS ANY DISCREPANCIES IN THE PLANS OR NOTES GIVEN BY THE PROJECT ENGINEER, IT SHALL BE THEIR DUTY TO IMMEDIATELY INFORM THE PROJECT ENGINEER IN WRITING. ANY WORK DONE AFTER SUCH A DISCOVERY, UNTIL AUTHORIZED, WILL BE AT THE CONTRACTOR'S RISK.
2. THE CONTRACTOR SHALL OBTAIN ALL NECESSARY LICENSES AND PERMITS REQUIRED TO COMPLETE THE WORK INCLUDED IN THE CONTRACT DOCUMENTS AT THE CONTRACTOR'S EXPENSE.
3. IT IS THE CONTRACTOR'S RESPONSIBILITY TO VERIFY THAT THEY AND THEIR SUBCONTRACTORS HAVE THE CORRECT AND MOST UP-TO-DATE PLANS AVAILABLE.
4. THE PROJECT WILL MEET ALL RELEVANT DESIGN REQUIREMENTS IN THE NCDEQ MANUAL AND THE TOWN OF ROLESVILLE REGULATIONS AND STANDARDS.
5. THE DESIGN ENGINEER OR THEIR REPRESENTATIVE SHALL BE ON SITE FOR THE INSTALLATION OF ESSENTIAL ELEMENTS OF THE PRINCIPAL SPILLWAY INCLUDING BUT NOT LIMITED TO THE ANTI-FLOAT BLOCK, RISER, CONCRETE COLLAR, CONCRETE CRADLE, AND THE OUTLET BARREL. THE CONTRACTOR SHALL NOTIFY THE DESIGN ENGINEER 72 HOURS PRIOR TO INSTALLATION OF THESE ITEMS TO ENSURE THAT A REPRESENTATIVE CAN BE ON-SITE. PHOTOGRAPHS OF THESE ITEMS MUST BE TAKEN PRIOR TO BACKFILLING FOR USE IN THE AS-BUILT PHASE. IF THE CONTRACTOR INSTALLS THESE WITHOUT THE ENGINEER OR ENGINEER'S REPRESENTATIVE ON-SITE, THEN THE ELEMENTS SHALL BE UNCOVERED FOR INSPECTION AT THE CONTRACTOR'S EXPENSE.
6. THE FINAL CERTIFICATION FOR THIS FACILITY WILL INCLUDE A CERTIFICATION BY THE ON-SITE GEOTECHNICAL ENGINEER THAT THE PROJECT WAS CONSTRUCTED PER THE APPROVED PLANS. IT IS THE RESPONSIBILITY OF THE CONTRACTOR TO COORDINATE WITH THE ON-SITE GEOTECHNICAL ENGINEER FOR OBSERVATION AND TESTING SUCH THAT THE ON-SITE GEOTECHNICAL ENGINEER CAN CERTIFY THE CONSTRUCTION OF THE DAM EMBANKMENT AND SPILLWAY. THIS CERTIFICATION MUST ADDRESS THE TESTING FOR MATERIALS AND COMPACTION OF THE DAM EMBANKMENT AND SPILLWAY.
7. ALL CONSTRUCTION ACTIVITY RELATED TO THE PROPOSED STORMWATER CONTROL MEASURE SHALL BE PER THE DETAILS AND SPECIFICATIONS SHOWN IN THESE DRAWINGS. SOILS, COMPACTION, AND OTHER MISCELLANEOUS DETAILS AND SPECIFICATIONS MAY BE MODIFIED PER THE RECOMMENDATIONS OF THE ON-SITE GEOTECHNICAL ENGINEER. HOWEVER, PRIOR TO IMPLEMENTATION, THE DESIGN ENGINEER SHALL BE NOTIFIED OF ANY DEVIATION FROM THESE DESIGN DRAWINGS, INCLUDING SHOP DRAWINGS FOR ANY PROPOSED MODIFICATION.
8. DURING THE INITIAL STAGES OF CONSTRUCTION, THE STORMWATER CONTROL MEASURE MAY BE USED AS A SEDIMENT BASIN FOR EROSION CONTROL PURPOSES. IF SO, THE CONTRACTOR SHALL FOLLOW THE GENERAL CONSTRUCTION SEQUENCE BELOW:
   A. THE CONTRACTOR SHALL CONSTRUCT THE ENTIRE FACILITY (PERMANENT OUTLET STRUCTURE, DAM, ETC.) WITH THE EXCEPTION OF THE INTERIOR FINE GRADING FOR THE FACILITY. THE INTERIOR FINE GRADING WILL BE CONSTRUCTED ONCE THE EROSION CONTROL PHASE IS COMPLETE.
   B. THE TEMPORARY DRAWDOWN RISER (OR SKIMMER) SHALL BE CONNECTED TO THE PERMANENT 6"Ø DIP DRAIN PIPE.
   C. ONCE THE UPSTREAM DRAINAGE AREA IS STABILIZED AND THE EROSION CONTROL INSPECTOR APPROVES THE REMOVAL OF THE SEDIMENT BASIN, THE CONTRACTOR SHALL REMOVE THE TEMPORARY DRAWDOWN RISER (OR SKIMMER) AND CLEAN OUT THE BASIN IN ACCORDANCE WITH EROSION CONTROL STANDARD PRACTICES. ALL SEDIMENT, TRASH, ETC. SHALL BE DISPOSED OF PROPERLY (I.E. PLACED IN A LANDFILL) AND NOT STOCKPILED IN AN AREA WHERE WATER QUALITY COULD BE ADVERSELY AFFECTED.
   D. ONCE THE BASIN IS CLEANED OUT, AND ALL EROSION CONTROL DEVICES REMOVED, THE CONTRACTOR SHALL CONSTRUCT THE INTERIOR GRADING SHOWN ON THIS SHEET.
   E. ONCE THE GRADING IS COMPLETE, THE CONTRACTOR SHALL REQUEST AN ON-SITE INSPECTION AND AN AS-BUILT SURVEY PRIOR TO INSTALLATION OF THE STORMWATER CONTROL MEASURE PLANTS. IF THE CONTRACTOR PLANTS THE PROPOSED VEGETATION PRIOR TO AN AS-BUILT SURVEY (AND SUBSEQUENT APPROVAL), ANY CHANGES TO THE GRADING / RE-PLANTING OF PLANTS WILL BE AT THE CONTRACTOR'S EXPENSE.
   F. ONCE THE ENGINEER HAS APPROVED THE AS-BUILT GRADING, THE CONTRACTOR SHALL PLANT THE PROPOSED STORMWATER CONTROL MEASURE PLANTS SHOWN ON THE LANDSCAPE PLAN FOR THE FACILITY. AFTER COMPLETION OF THE PLANTING, THE LANDSCAPE CONTRACTOR SHALL PROVIDE A LETTER TO THE ENGINEER CERTIFYING THAT THE PLANTS HAVE BEEN INSTALLED PER THE APPROVED STORMWATER CONTROL MEASURE PLANTING PLAN.
9. ALL OSHA REQUIREMENTS FOR EXCAVATIONS (SHORING, DEPTH, ETC.) ARE THE RESPONSIBILITY OF THE CONTRACTOR. IF REQUIRED, THE CONTRACTOR SHALL PROVIDE AN EXCAVATION PLAN TO BE SEALED BY A NC P.E. IT IS THE RESPONSIBILITY OF THE CONTRACTOR TO DETERMINE IF AN EXCAVATION PLAN IS REQUIRED. THE JOHN R. MCADAMS COMPANY ASSUMES NO RESPONSIBILITY FOR ANY EXCAVATION DESIGN RELATED TO SAFETY OR OSHA REQUIREMENTS.
10. ON-SITE GEOTECHNICAL ENGINEER SHALL DETERMINE THE IN-SITU SOIL INFILTRATION RATE OF THE STORMWATER CONTROL MEASURE BOTTOM. BASED ON THE RESULTS, THE DESIGN ENGINEER SHALL DETERMINE IF A LINER WILL BE NEEDED TO MAINTAIN A PERMANENT POOL. UPON DETERMINATION OF HIGHLY PERMEABLE SOILS AND THE SEASONAL HIGH WATER TABLE OUTSIDE OF THE ACCEPTABLE RANGE, THE DESIGN ENGINEER WILL PROVIDE SPECIFICATIONS FOR THE LINER.
11. IT IS ANTICIPATED THAT DEWATERING WILL BE NECESSARY IN THE EXCAVATION AREAS (E.G. - EMBANKMENT SUB GRADE, INTERIOR PORTIONS OF THE STORMWATER CONTROL MEASURE, AND KEY TRENCH). THEREFORE, THE CONTRACTOR SHALL FURNISH, INSTALL, OPERATE, AND MAINTAIN ANY PUMPING EQUIPMENT, ETC. NEEDED FOR REMOVAL OF WATER FROM VARIOUS PARTS OF THE STORMWATER CONTROL MEASURE SITE. DURING PLACEMENT OF FILL WITHIN THESE AREAS, THE CONTRACTOR SHALL KEEP THE WATER LEVEL BELOW THE BOTTOM OF THE EXCAVATION / CONSTRUCTION AREAS. THE MANNER IN WHICH THE WATER IS REMOVED SHALL BE SUCH THAT THE EXCAVATION BOTTOM AND SIDE SLOPES ARE STABLE, WITH NO SEDIMENT DISCHARGED FROM THE SITE (I.E. PUMPED WATER MAY NEED TO BE DIRECTED TO AN APPROVED EROSION CONTROL DEVICE PRIOR TO DISCHARGE).
12. PRIOR TO TOPSOIL INSTALLATION, THE CONTRACTOR SHALL SCARIFY THE TOP 2-3" OF THE BERM SECTION TO PROMOTE BONDING OF THE TOPSOIL WITH THE COMPACTED FILL. THE TOPSOIL DEPTH SHALL RANGE FROM 3-4" ON THE DAM EMBANKMENT AND AQUATIC SHELF. PLEASE NOTE THE TOPSOIL SHALL BE AMENDED AS DIRECTED BY A LANDSCAPE PROFESSIONAL PRIOR TO INSTALLATION ON THE EMBANKMENT AND AQUATIC SHELF.
13. THE CONTRACTOR SHALL PROVIDE A ONE YEAR WARRANTY PERIOD FOR ALL PLANTINGS IN THE STORMWATER CONTROL MEASURE.
14. THE CONTRACTOR SHALL REFER TO THE LANDSCAPING PLAN FOR THE PERMANENT PLANTING PLAN/SCHEDULE FOR THIS FACILITY. CONTRACTOR SHALL COORDINATE WITH A LANDSCAPE PROFESSIONAL REGARDING SCHEDULING FOR PLANT INSTALLATION. PLEASE NOTE THAT NO TREES/SHRUBS OF ANY TYPE MAY BE PLANTED ON FILL AREAS OF THE PROPOSED DAM EMBANKMENT.
15. RETAINING WALL ALIGNMENT SHOWN ON THESE PLANS DEPICTS THE LOCATION OF THE FRONT FACE OF THE RETAINING WALL AT THE BOTTOM.
16. RETAINING WALL IS TO BE A DESIGN-BUILD PROJECT BY THE CONTRACTOR. IT SHALL BE THE CONTRACTOR'S RESPONSIBILITY TO OBTAIN FINAL CONSTRUCTION DRAWINGS FROM A REGISTERED PROFESSIONAL ENGINEER AND GAIN ALL REQUIRED PERMITS NECESSARY FOR THE CONSTRUCTION OF THE RETAINING WALL.
17. RETAINING WALL SHALL BE ASSUMED TO BE BACKFILLED WITH OFF-SITE BORROW MATERIAL OR PROCESSED FILL UNLESS CONTRACTOR CAN PROVIDE OWNER WITH CONFIRMATION FROM THE GEOTECHNICAL ENGINEER AND THE RETAINING WALL DESIGNER THAT READILY AVAILABLE ON-SITE SOILS CAN BE USED.
18. TOP AND BOTTOM OF WALL ELEVATIONS REFERENCED ON THESE PLANS IDENTIFY FINISHED GRADE ELEVATIONS ONLY. THE EXTENT THAT THE RETAINING WALL WILL BE EXTENDED BELOW GRADE TO THE FOOTING SHALL BE IDENTIFIED ON THE RETAINING WALL CONSTRUCTION DRAWINGS.
19. ON-SITE GEOTECHNICAL ENGINEER SHOULD BE GIVEN AN OPPORTUNITY TO REVIEW ALL RETAINING WALL PLANS AND DESIGNS RELEVANT TO GEOTECHNICAL CONSIDERATIONS PRIOR TO FINAL DESIGN OF THE WALLS.

OUTLET STRUCTURE MATERIAL SPECIFICATIONS

1. THE 24"Ø RCP OUTLET BARREL SHALL BE CLASS III O-RING RCP, MODIFIED BELL AND SPIGOT, MEETING THE REQUIREMENTS OF ASTM C76-LATEST. THE PIPES SHALL HAVE SINGLE OFFSET JOINTS MEETING ASTM C-443-LATEST.
2. THE STRUCTURAL DESIGN FOR THE 4' X 4' (INTERNAL DIMENSIONS) RISER BOX WITH EXTENDED BASE SHALL BE BY OTHERS. PRIOR TO ORDERING THE STRUCTURES, THE CONTRACTOR SHALL PROVIDE, TO THE DESIGN ENGINEER FOR REVIEW, SHOP DRAWINGS AND SUPPORTING STRUCTURAL CALCULATIONS SEALED BY A P.E. REGISTERED IN NORTH CAROLINA DEMONSTRATING THE PERTINENT VERTICAL LOADS ARE SUPPORTED BY THE CONCRETE RISER STRUCTURE.
3. THE RISER BOX OUTLET STRUCTURE SHALL BE PROVIDED WITH STEPS 16" ON CENTER. STEPS SHALL BE PROVIDED ON THE INNER WALL OF THE RISER BOX. STEPS SHALL BE IN ACCORDANCE WITH NCDOT STD. 840.66. PLEASE REFER TO SHEET C9.10 FOR LOCATION OF THE RISER STEPS. NOTE THE STEPS SHALL LINE UP WITH THE ACCESS HATCH OF THE TRASH RACK.
4. THE CONCRETE ANTI-FLOTATION BLOCK SHALL BE CAST-IN-PLACE. STEEL REINFORCEMENT AND CONNECTION TO THE RISER SHALL BE PROVIDED IN ACCORDANCE WITH THE DETAIL ON SHEET C9.10. THE CONTRACTOR SHALL ENSURE THE WEIGHT OF THE ENTIRE RISER STRUCTURE IS GREATER THAN OR EQUAL TO 31,763 LBS.
5. THE RISER BOX JOINTS SHALL BE SEALED USING BUTYL RUBBER SEALANT CONFORMING TO ASTM-C990-LATEST. IF NECESSARY, THE CONTRACTOR SHALL INCORPORATE A WATERSTOP INTO THE RISER BOX JOINT TO ENSURE A WATERTIGHT CONNECTION. THE CONTRACTOR SHALL PARGE JOINTS ON BOTH THE INSIDE AND OUTSIDE WITH NON-SHRINK GROUT AND INSTALL GALVANIZED STEEL STRAPS PER DETAIL ON SHEET C9.09.
6. PRIOR TO ORDERING, THE CONTRACTOR SHALL SUBMIT TRASH RACK SHOP DRAWINGS TO THE ENGINEER FOR REVIEW. CONTRACTOR SHALL ENSURE THAT AN ACCESS HATCH IS PROVIDED ON THE TRASH RACK (SEE DETAIL SHEET C9.09 FOR LOCATION) THAT WILL ALLOW FOR FUTURE MAINTENANCE ACCESS. NOTE THE ACCESS HATCH SHALL LINE UP WITH THE ACCESS STEPS AFTER INSTALLATION.
7. ALL POURED CONCRETE SHALL MEET THE FOLLOWING SPECIFICATIONS UNLESS OTHERWISE NOTED:

   -MINIMUM 3000 PSI (28 DAY)
   -SLUMP = 3" - 5"
   -ENTRAINED AIR = 5% - 7%

   PLEASE NOTE NO CONCRETE SHALL BE POURED WHEN THE AMBIENT AIR TEMPERATURES ARE EXPECTED TO BE ABOVE 85°F OR BELOW 40°F. CAST-IN-PLACE CONCRETE SHALL BE "WET CURED" AFTER FINISHING FOR A MINIMUM OF 48 HOURS.

   CAST-IN-PLACE CONCRETE TO BE VIBRATED AS NECESSARY.

   ON-SITE GEOTECHNICAL ENGINEER TO TEST AND CERTIFY ALL POURED CONCRETE MEETS THE ABOVE SPECIFICATIONS. CONCRETE CYLINDERS FOR TESTING TO BE OBTAINED AT TIME OF POURING OF CAST-IN-PLACE STRUCTURES.
8. GEOTEXTILE FABRIC FOR THE 24"Ø RCP OUTLET BARREL JOINTS SHALL BE MIRAFI 180N OR ENGINEER APPROVED EQUAL (NON-WOVEN FABRIC).
9. STORMWATER CONTROL MEASURE EMERGENCY DRAWDOWN IS VIA AN 6"Ø PLUG VALVE. THE VALVE SHALL BE A M&H STYLE 1820 ECCENTRIC VALVE OR APPROVED EQUAL. THIS VALVE IS IN ACCORDANCE WITH AWWA C-517, AND SHALL BE OPERABLE FROM TOP OF OUTLET STRUCTURE VIA A HAND WHEEL (SEE DETAIL SHEET C9.09). THE CONTRACTOR SHALL PROVIDE A REMOVABLE VALVE WRENCH WITH A HAND WHEEL ON TOP FOR OPERATION OF THE 6"Ø PLUG VALVE.

CONSTRUCTION SEQUENCE

1. PRIOR TO CONSTRUCTION, THE OWNER SHALL OBTAIN A LAND DISTURBING (GRADING) PERMIT AND AN "APPROVAL TO CONSTRUCT" FROM THE TOWN OF ROLESVILLE AND ALL OTHER NECESSARY PERMITS FROM APPLICABLE AGENCIES (E.G. 404 / 401 PERMITS).
2. INSTALL ALL SEDIMENT AND EROSION CONTROL MEASURES PER THE APPROVED SEDIMENT AND EROSION CONTROL PLAN. THE CONTRACTOR SHALL MAINTAIN ALL APPROVED SEDIMENT AND EROSION CONTROL MEASURES THROUGHOUT THE ENTIRE PROJECT, AS REQUIRED. THE CONTRACTOR SHALL RECEIVE APPROVAL FROM THE EROSION CONTROL INSPECTOR, AS REQUIRED BY GOVERNING AGENCIES, PRIOR TO ANY CLEARING.
3. CLEAR AND GRUB AREA WITHIN THE LIMITS OF THE PROPOSED DAM CONSTRUCTION, ADHERING TO THE "BERM AND SOIL COMPACTION" NOTES. ALL TREES AND THEIR ENTIRE ROOT SYSTEMS MUST BE REMOVED FROM THE DAM FOOTPRINT AREA AND BACKFILLED WITH SUITABLE SOIL MATERIAL. THE BACKFILLED AREAS SHALL BE COMPACTED TO THE SAME STANDARDS AS THE DAM EMBANKMENT. THE REMAINING AREA OF THE EMBANKMENT SHALL BE STRIPPED TO A SUITABLE DEPTH AS DIRECTED BY THE ON-SITE GEOTECHNICAL ENGINEER. ANY RESIDUAL SOILS TO BE LEFT IN PLACE MUST BE WELL SCARIFIED TO PROMOTE BONDING OF THE NEW EMBANKMENT FILL. NO EMBANKMENT MATERIAL SHALL BE PLACED FOR THE DAM OR KEY TRENCH UNTIL APPROVAL OF THE DAM SUBGRADE IS OBTAINED FROM THE ON-SITE GEOTECHNICAL ENGINEER.
4. EXCAVATE FOR THE NEW KEY TRENCH ALONG THE CENTERLINE OF THE PROPOSED DAM EMBANKMENT. THE TRENCH SHALL EXTEND A MINIMUM OF 5 FT BELOW EXISTING GRADE OR 2 FT BELOW THE 24"Ø RCP OUTLET BARREL AND SHALL HAVE A MINIMUM BOTTOM WIDTH OF 5 FEET. THE KEY TRENCH SIDESLOPES SHALL BE A MINIMUM OF 1:1 (H:V). WHEN EXCAVATING THE KEY TRENCH, IF ANY DEBRIS IS ENCOUNTERED TO AN EXTENT THAT SUCH DEBRIS MAY EXIST IN OTHER INSITU PORTIONS OF THE DAM EMBANKMENT, IT SHOULD ALSO BE REMOVED. THE KEY TRENCH SHALL BE COMPACTED TO THE SAME SPECIFICATION LISTED IN ITEM 4 OF THE "BERM AND SOIL COMPACTION SPECIFICATIONS" NOTES. DEPENDING UPON ON-SITE SOIL CONDITIONS ENCOUNTERED DURING EXCAVATION, THE ON-SITE GEOTECHNICAL ENGINEER MAY VARY THE DEPTH AND DIMENSIONS OF THE KEY TRENCH AS DEEMED NECESSARY. THE ON-SITE GEOTECHNICAL ENGINEER SHALL RETAIN DOCUMENTATION OF ANY VARIATION FOR FUTURE AS-BUILT SUBMITTALS TO THE TOWN OF ROLESVILLE.
5. BEGIN PLACEMENT OF BACKFILL WITHIN THE KEY TRENCH. THE KEY TRENCH SHALL BE COMPACTED TO THE SPECIFICATIONS LISTED IN ITEM 4 OF THE "BERM AND SOIL COMPACTION SPECIFICATIONS" NOTES. THE KEY TRENCH SHALL BE TESTED PER THE SPECIFICATIONS LISTED IN THAT SECTION.
6. CONTRACTOR SHALL GIVE THE DESIGN ENGINEER A MINIMUM OF 72 HOURS NOTICE PRIOR TO THE INSTALLATION OF THE SPILLWAY.
7. PRIOR TO INSTALLATION, SUBGRADE CONDITIONS ALONG THE SPILLWAY PIPES SHOULD BE EVALUATED BY THE ON-SITE GEOTECHNICAL ENGINEER TO ASSESS WHETHER SUITABLE BEARING CONDITIONS EXIST AT THE SUBGRADE LEVEL. SHOULD SOFT OR OTHERWISE UNSUITABLE CONDITIONS BE ENCOUNTERED ALONG THE PIPE ALIGNMENTS, THESE MATERIALS SHOULD BE UNDERCUT AS DIRECTED BY THE GEOTECHNICAL ENGINEER. THE UNDERCUT MATERIALS SHALL BE REPLACED WITH ADEQUATELY COMPACTED STRUCTURAL FILL, LEAN CONCRETE OR FLOWABLE FILL AS DIRECTED BY THE ON-SITE GEOTECHNICAL ENGINEER.
8. IN ORDER TO HELP PROTECT THE SOIL SUBGRADE FROM DETERIORATION (DUE TO EXPOSURE, RAINFALL, SEEPAGE, AND RUNOFF) BEFORE THE CRADLE CAN BE POURED, IT IS STRONGLY RECOMMENDED THAT A 3" TO 4" THICK CONCRETE MUD MAT BE POURED OVER THE SUBGRADE ONCE IT IS APPROVED BY THE ON-SITE GEOTECHNICAL ENGINEER. THE MUD MAT WILL ALSO PROVIDE BEARING FOR THE BLOCKS THAT TEMPORARILY SUPPORT THE SPILLWAY PIPE UNTIL THE CRADLE CAN BE POURED. THE METHOD OF BLOCK SUPPORT FOR THE PIPE PROPOSED BY THE CONTRACTOR SHOULD BE SUBMITTED TO THE JOHN R. MCADAMS COMPANY FOR REVIEW.
9. BEGIN CONSTRUCTION OF THE NEW EMBANKMENT. FILL MATERIALS SHALL BE PLACED IN MAXIMUM 8" THICK LIFTS PRIOR TO COMPACTION, UNLESS DIRECTED OTHERWISE BY THE ON-SITE GEOTECHNICAL ENGINEER. FILL LIFTS SHALL BE CONTINUOUS OVER THE ENTIRE LENGTH OF FILL. IF IT IS NECESSARY, THE EMBANKMENT FILL MATERIAL WILL BE OVERBUILT IN HORIZONTAL LIFTS AND CUT BACK TO FINAL GRADE IN ORDER TO ACHIEVE PROPER COMPACTION.
10. AS CONSTRUCTION OF THE EMBANKMENT MOVES FORWARD, IT WILL BE NECESSARY TO INSTALL THE CONCRETE CRADLE. SEE NOTE ON CRADLE DETAIL (SHEET C9.10). THE PROPOSED STRUCTURAL FILL MATERIAL SHALL BE UTILIZED AS THE FORMWORK FOR THE CONCRETE CRADLE. THE STRUCTURAL FILL SHOULD BE INSTALLED AND COMPACTED UP TO THE TOP OF CONCRETE CRADLE ELEVATION. ONCE THE STRUCTURAL FILL REACHES THE NEXT DOWNSTREAM JUNCTION BOX OR HEADWALL AND IS COMPACTED TO THE ELEVATION OF THE TOP OF THE CONCRETE CRADLE, EXCAVATE THE CONCRETE CRADLE TRENCH PER THE PROVIDED DETAILS AND CONSTRUCT THE CONCRETE CRADLE AS PER THE PROVIDED CONCRETE CRADLE DETAIL. THE CRADLE SHALL NOT BE BEDDED ON STONE MATERIAL.
11. INSTALL RISER / BARREL ASSEMBLY, ALONG WITH THE EMERGENCY DRAIN SYSTEM. INSTALL 24" RCP OUTLET BARREL SPILLWAY FILTER FROM THE DETAILS SHOWN ON SHEET C9.09.
12. CONSTRUCT EMBANKMENT PER SPECIFICATIONS LISTED IN THE "BERM AND SOIL COMPACTION SPECIFICATIONS" NOTES AND REQUIREMENTS OF THE ON-SITE GEOTECHNICAL ENGINEER. ALL CHARACTERISTICS OF THE EMBANKMENT FILL MATERIAL SHALL MEET THE STANDARDS SET FORTH IN THE "BERM AND SOIL COMPACTION SPECIFICATIONS" NOTES, INCLUDING COMPACTION AND MOISTURE REQUIREMENTS. IF NECESSARY TO ACHIEVE PROPER COMPACTION, THE EMBANKMENT FILL MATERIAL WILL BE OVERBUILT IN HORIZONTAL LIFTS AND CUT BACK TO PROPER FINAL GRADE. ANY HAND COMPACTION ACTIVITIES AROUND SPILLWAY OR DRAIN STRUCTURES SHALL BE CONDUCTED IN 4-INCH LOOSE LIFTS AND BE TO THE SAME COMPACTION AND MOISTURE REQUIREMENTS AS THE ENTIRE EMBANKMENT. ALL COMPACTION AND MOISTURE TESTING SHALL BE CARRIED OUT AS DIRECTED BY THE ON-SITE GEOTECHNICAL ENGINEER AND AS LISTED IN THE "BERM AND SOIL COMPACTION SPECIFICATIONS" NOTES.
13. UPON COMPLETION OF DAM EMBANKMENT, PROMPTLY STABILIZE AND SEED DAM EMBANKMENT PER SEEDING SCHEDULE. PERMANENT GROUND COVER SHALL BE ESTABLISHED PER THE PERMANENT SEEDING SCHEDULE FOUND ON SHEET C9.11.
14. SCHEDULE A FINAL AS-BUILT INSPECTION AND AS-BUILT SURVEY WITH THE ENGINEER AND SURVEYOR. AN AS-BUILT INSPECTION AND SURVEY SHALL BE SCHEDULED BEFORE IMPOUNDING WATER IN THE FACILITY AND A MINIMUM OF 60 DAYS PRIOR TO THE ANTICIPATED DATE OF CERTIFICATION APPROVAL. ANY COMMENTS OR DEFICIENCIES IN THE SCM CONSTRUCTION MUST BE CORRECTED TO THE SATISFACTION OF THE ENGINEER AND OWNER BEFORE CERTIFICATION SHALL BE GRANTED.

BERM AND SOIL COMPACTION SPECIFICATIONS

1. PRIOR TO CONSTRUCTION, THE ON-SITE GEOTECHNICAL ENGINEER SHALL IDENTIFY BORROW / FILL AREAS AND VERIFY THEIR SUITABILITY FOR USE WITHIN THE DAM EMBANKMENT. ALSO, THE ON-SITE GEOTECHNICAL ENGINEER SHALL PERFORM STANDARD PROCTORS ON THE PROPOSED BORROW MATERIAL TO ENSURE THAT OPTIMUM MOISTURE CONTENT AND COMPACTION CAN BE ACHIEVED / CONTROLLED DURING CONSTRUCTION.
2. ALL FILL MATERIALS TO BE USED FOR THE DAM EMBANKMENT SHALL BE TAKEN FROM BORROW AREAS APPROVED BY THE ON-SITE GEOTECHNICAL ENGINEER. THE FILL MATERIAL SHALL BE FREE FROM ROOTS, STUMPS, WOOD, STONES GREATER THAN 6", AND FROZEN OR OTHER OBJECTIONABLE MATERIAL. THE FOLLOWING SOIL TYPES ARE SUITABLE FOR USE AS FILL WITHIN THE DAM EMBANKMENT AND KEY TRENCH: ML AND CL. ALL FILL MATERIALS SHALL BE APPROVED BY THE ONSITE GEOTECHNICAL ENGINEER FOR THE INTENDED USE.
3. FILL PLACEMENT FOR THE EMBANKMENT SHALL NOT EXCEED A MAXIMUM 8" LIFT (UNCOMPACTED), EACH LIFT SHALL BE CONTINUOUS FOR THE ENTIRE LENGTH OF EMBANKMENT. BEFORE PLACEMENT OF FILL FOR THE BERM SECTION, ALL UNSUITABLE MATERIAL SHALL BE REMOVED AND THE SURFACE PROPERLY PREPARED FOR FILL PLACEMENT. FILL MATERIAL ADJACENT TO ALL SPILLWAY AND DRAINAGE STRUCTURES SHALL BE PLACED IN 4-INCH (UNCOMPACTED) LIFTS AND HAND-COMPACTED TO THE SAME COMPACTION AND MOISTURE REQUIREMENTS AS THE ENTIRE EMBANKMENT.
4. ALL FILL SOILS USED IN THE EMBANKMENT CONSTRUCTION SHALL BE COMPACTED TO AT LEAST 95% OF THE STANDARD PROCTOR MAXIMUM DRY DENSITY (ASTM D-698). THE FILL SOILS SHALL BE COMPACTED AT A MOISTURE CONTENT WITHIN -1 TO +3 PERCENT OF ITS OPTIMUM MOISTURE CONTENT. COMPACTION TESTS SHALL BE PERFORMED BY THE ON-SITE GEOTECHNICAL ENGINEER DURING CONSTRUCTION TO VERIFY THAT THE PROPER COMPACTION LEVEL HAS BEEN REACHED. THE FILL SHOULD BE COMPACTED USING A SHEEPSFOOT TYPE COMPACTOR. IN ORDER TO PREVENT DAMAGE TO THE PIPE, NO COMPACTION EQUIPMENT SHALL CROSS ANY PIPE UNTIL MINIMUM COVER IS ESTABLISHED ALONG THE PIPE.
5. THE DESIGN ENGINEER SHALL BE PROVIDED WITH REPORTS AND CERTIFICATION BY THE ON-SITE GEOTECHNICAL ENGINEER THAT THE GEOTECHNICAL ASPECTS OF THE FACILITY HAVE BEEN CONSTRUCTED PER PLAN. THIS CERTIFICATION MUST ADDRESS THE TESTING FOR MATERIALS AND COMPACTION OF THE DAM EMBANKMENT AND SPILLWAY. THESE REPORTS AND CERTIFICATION WILL BE NEEDED DURING THE AS-BUILT CERTIFICATION PROCESS FOR THIS STORMWATER CONTROL MEASURE. THEREFORE, IT SHALL BE THE CONTRACTOR'S RESPONSIBILITY TO COORDINATE TESTING AND OBSERVATION WITH THE ON-SITE GEOTECHNICAL ENGINEER.
6. TESTING OF THE NEW FILL MATERIALS SHALL BE PERFORMED TO VERIFY THAT THE RECOMMENDED LEVEL OF COMPACTION IS ACHIEVED DURING CONSTRUCTION. THEREFORE, ONE DENSITY TEST SHALL BE PERFORMED FOR EVERY 2,500 SQUARE FEET OF AREA FOR EVERY LIFT OF FILL OR AS RECOMMENDED BY THE ON-SITE GEOTECHNICAL ENGINEER.
7. TESTING WILL BE REQUIRED ALONG THE 24"Ø RCP OUTLET BARREL AT A FREQUENCY OF ONE TEST PER 25 LF OF PIPE PER VERTICAL FOOT OF FILL OR AS DIRECTED BY THE ON-SITE GEOTECHNICAL ENGINEER.

STATEMENT OF RESPONSIBILITY

1. ALL REQUIRED MAINTENANCE AND INSPECTIONS OF THE STORMWATER CONTROL MEASURE SHALL BE THE RESPONSIBILITY OF THE OWNER, PER THE EXECUTED OPERATION AND MAINTENANCE AGREEMENT FOR THIS FACILITY.

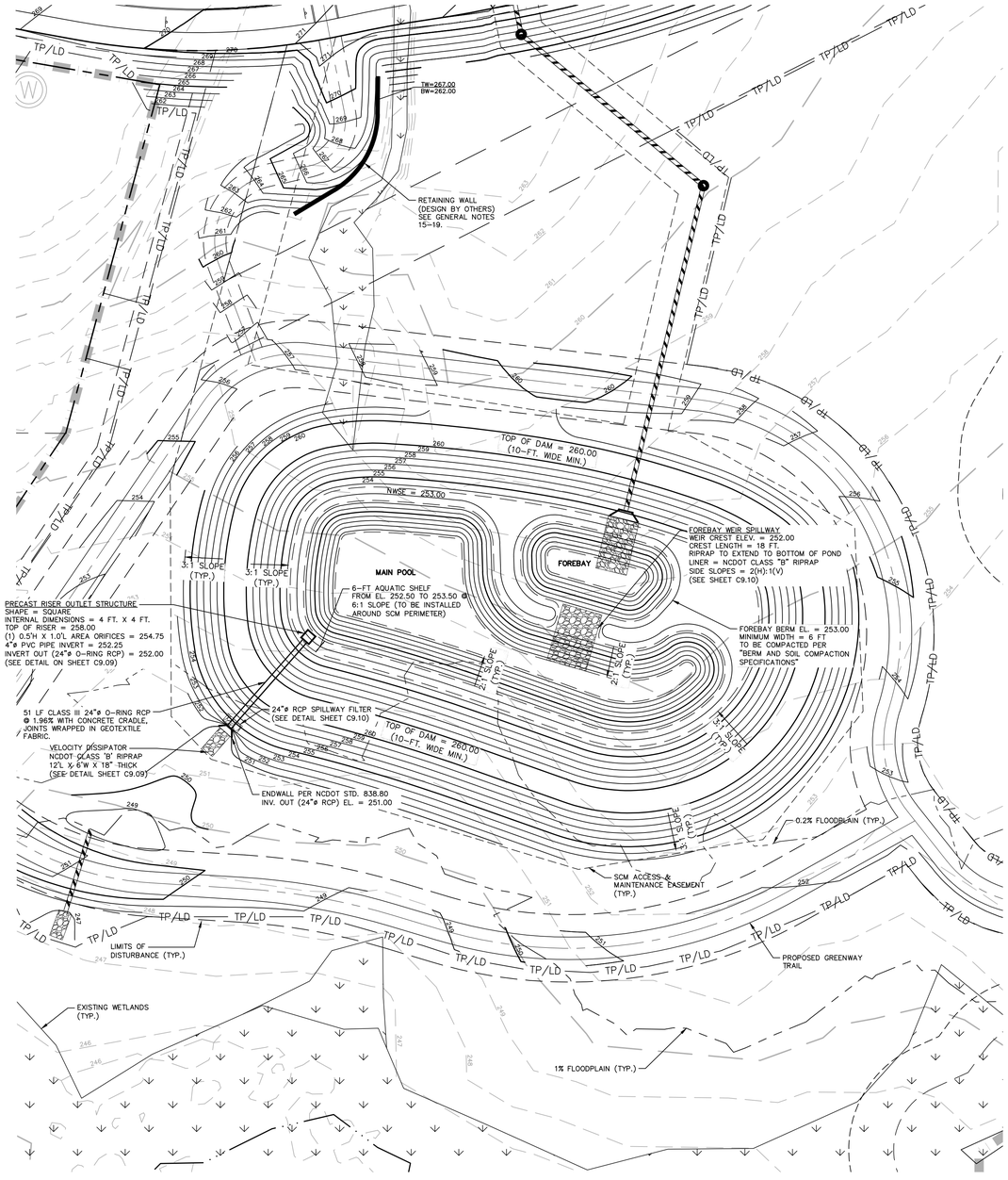

STORMWATER WETPOND 'G' PLAN VIEW

1" = 30'

GRAPHIC SCALE

0 15 30 60

1 inch = 30 ft.

FINAL DRAWING - NOT RELEASED FOR CONSTRUCTION

McADAMS
The John R. McAdams Company, Inc.
2905 Meridian Parkway
Durham, NC 27713

phone 919. 361. 5000
fax 919. 361. 2269
license number: C-0293, C-187

www.mcadamsco.com

CLIENT

ALLIANCE GROUP OF NC, LLC
7208 FALLS OF NEUSE RD, SUITE 101
RALEIGH, NORTH CAROLINA 27615
CONTACT: JACOB ANDERSON
PHONE: 919. 239. 9486

AGNC BROKERAGE | CONSULTING | PLANNING

PEARCE FARM - PHASES 1-3
CONSTRUCTION DRAWINGS - PACKAGE 1

BURLINGTON MILLS ROAD
TOWN OF ROLESVILLE, NORTH CAROLINA

CID-24-08

NORTH CAROLINA PROFESSIONAL ENGINEER SEAL 054404 MARIA C. TORRES — NOT FOR CONSTRUCTION

REVISIONS

NO.	DATE	
1	02. 03. 2025	REVISED PER TOWN, CITY AND COUNTY COMMENTS

PLAN INFORMATION

PROJECT NO.	AGN23001
FILENAME	AGN23001-SCMB
CHECKED BY	MCT
DRAWN BY	MMJ
SCALE	1"=30'
DATE	12. 02. 2024

SHEET

SCM G
PLAN VIEW
C9.08

X:\Projects\AGN\AGN23001\04-Production\Water Resources\Stormwater Management\Site Plan\Full Buildout Model\Current Drawings\AGN23001-SCMG.dwg, 1/30/2025 4:40:13 PM, Mirabelle Javillana

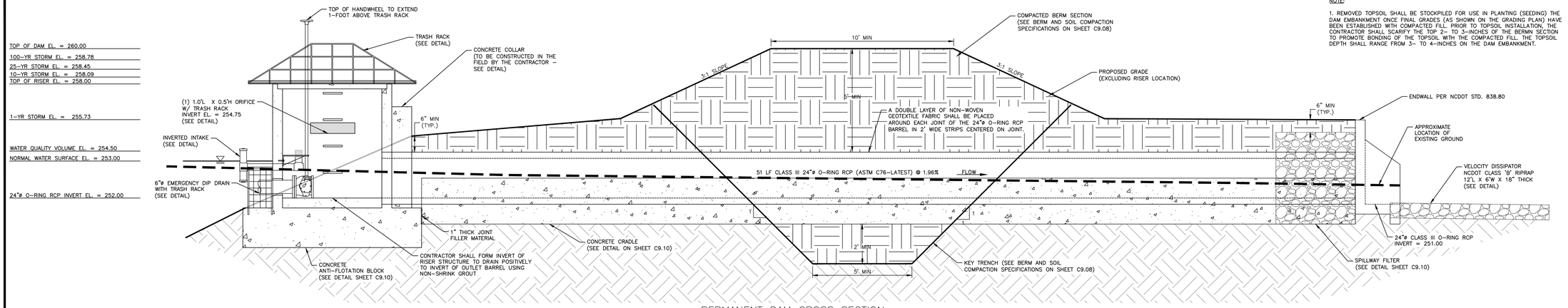

NOTE:

1. REMOVED TOPSOIL SHALL BE STOCKPILED FOR USE IN PLANTING (SEEDING) THE DAM EMBANKMENT ONCE FINAL GRADES (AS SHOWN ON THE GRADING PLAN) HAVE BEEN ESTABLISHED WITH COMPACTED FILL. PRIOR TO TOPSOIL INSTALLATION, THE CONTRACTOR SHALL SCARIFY THE TOP 2- TO 3-INCHES OF THE BERM SECTION TO PROMOTE BONDING OF THE TOPSOIL WITH THE COMPACTED FILL. THE TOPSOIL DEPTH SHALL RANGE FROM 3- TO 4-INCHES ON THE DAM EMBANKMENT.

PERMANENT DAM CROSS SECTION
N.T.S.

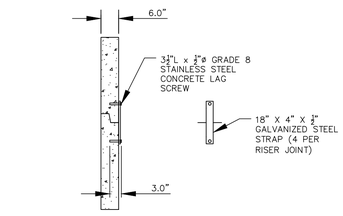

RISER JOINT CONNECTION DETAIL
N.T.S.

NOTES:

1. CONCRETE ANTI-FLOTATION BLOCK TO BE PROVIDED WITH MINIMUM TEMPERATURE AND SHRINKAGE STEEL REINFORCEMENT.
2. TRASH RACKS NOT SHOWN FOR CLARITY.
3. THE NUMBER OF GUIDES FOR THE VALVE STEM SHALL BE DETERMINED IN THE FIELD BY THE CONTRACTOR. THE VALVE STEM MUST BE OPERABLE FROM THE TOP OF THE RISER VIA THE HANDWHEEL WITH AN INSIGNIFICANT AMOUNT OF PLAY IN THE VALVE STEM.
4. CONTRACTOR SHALL PROVIDE A JOINT IN THE OUTLET BARREL NO MORE THAN 5-FT FROM THE RISER.

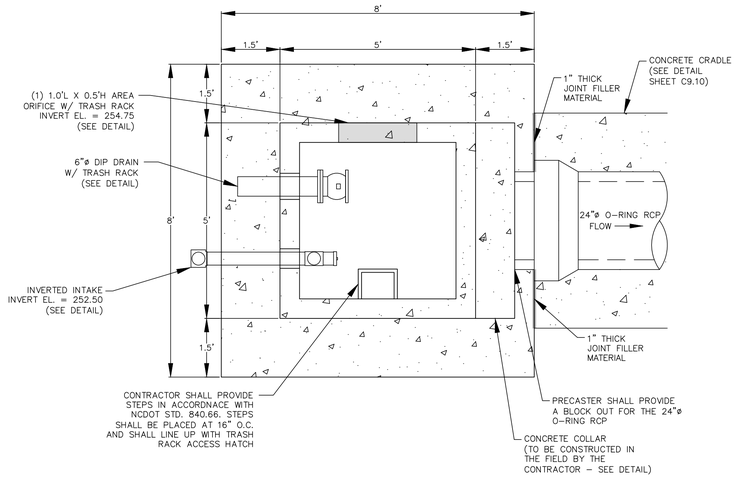

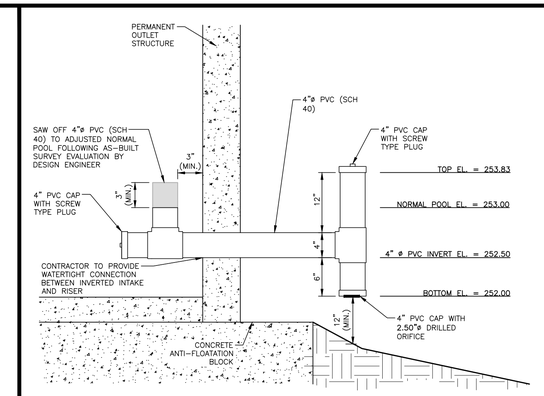

INVERTED INTAKE OUTLET DETAIL
N.T.S.

NOTES:

1. ATTACH TRASH RACK WITH (4) HOT DIPPED GALVANIZED STEEL CLAMPS. EACH CLAMP ATTACHED TO WEIR BOX BY (2) 4"x1/4" CONCRETE ANCHOR BOLTS. EACH CLAMP SHALL BE COATED WITH AN EPOXY COATING.
2. ALL REBAR TO BE GALVANIZED #4 REBAR WITH AN EPOXY COATING.
3. BARS TO EXTEND ON BOTTOM OF TRASH RACK.

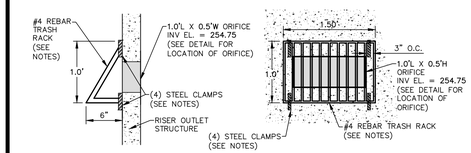

AREA ORIFICE TRASH RACK DETAIL
N.T.S.

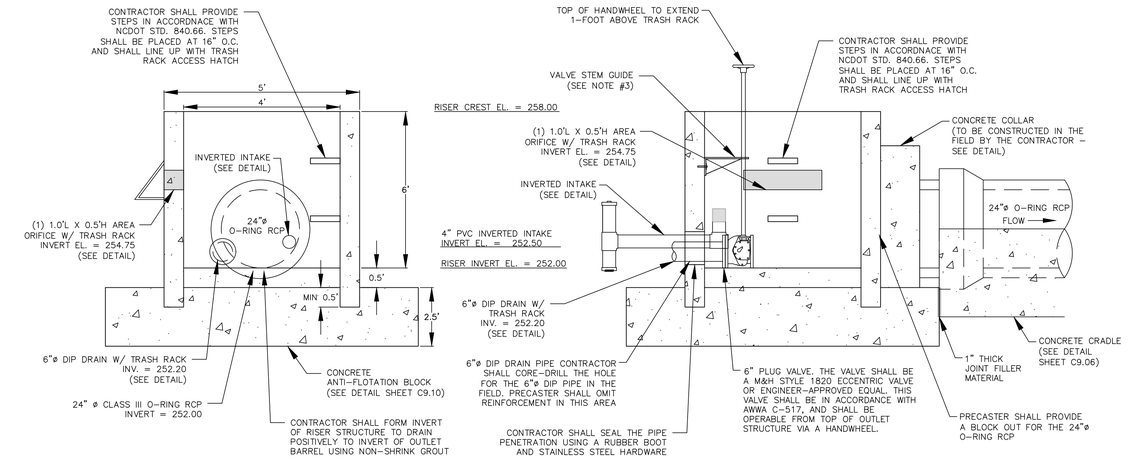

PERMANENT OUTLET STRUCTURE DETAILS
N.T.S.

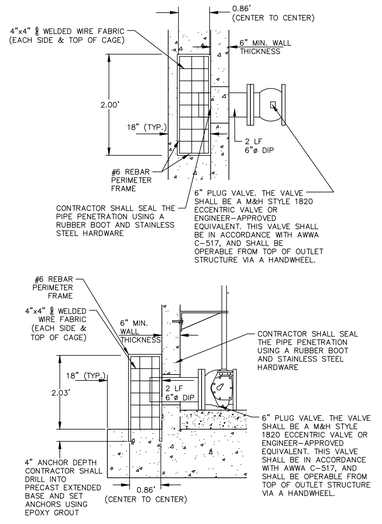

6"ø EMERGENCY DIP DRAIN TRASH RACK DETAILS
N.T.S.

NOTES:

1. A FILTER BLANKET IS TO BE INSTALLED BETWEEN THE RIPRAP AND SOIL FOUNDATION. THE FILTER BLANKET WILL CONSIST OF A MINIMUM 4" THICK LAYER OF STONE (NCDOT #57) UNDERLAIN WITH MIRAFI FILTER WEAVE 700 OR ENGINEER-APPROVED EQUIVALENT.

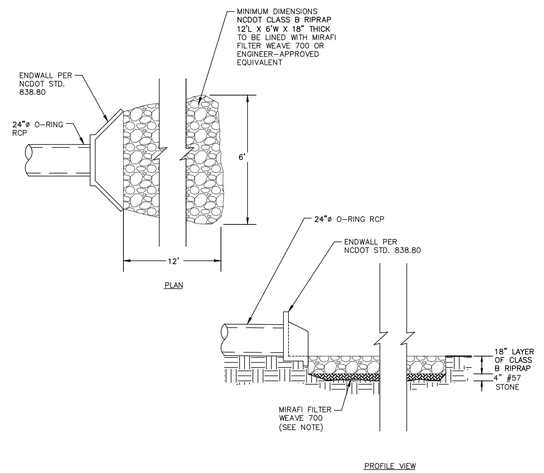

PROFILE VIEW

OUTLET BARREL VELOCITY DISSIPATOR
N.T.S.

FINAL DRAWING - NOT RELEASED FOR CONSTRUCTION

McAdams
The John R. McAdams Company, Inc.
2905 Meridian Parkway
Durham, NC 27713

phone 919. 361. 5000
fax 919. 361. 2269
license number: C-0293, C-187

www.mcadamsco.com

CLIENT

ALLIANCE GROUP OF NC, LLC
7208 FALLS OF NEUSE RD, SUITE 101
RALEIGH, NORTH CAROLINA 27615
CONTACT: JACOB ANDERSON
PHONE: 919. 239. 9486

AGNC BROKERAGE | CONSULTING | PLANNING

PEARCE FARM - PHASES 1-3
CONSTRUCTION DRAWINGS - PACKAGE 1
BURLINGTON MILLS ROAD
TOWN OF ROLESVILLE, NORTH CAROLINA

CID-24-08

NORTH CAROLINA PROFESSIONAL ENGINEER SEAL 054404 MARIA C. TORRES NOT FOR CONSTRUCTION

REVISIONS

NO.	DATE	
1	02. 03. 2025	REVISED PER TOWN, CITY AND COUNTY COMMENTS

PLAN INFORMATION

PROJECT NO.	AGN23001
FILENAME	AGN23001-SCMG
CHECKED BY	MCT
DRAWN BY	MMJ
SCALE	N.T.S.
DATE	12. 02. 2024

SHEET

SCM G DETAILS

C9.09

X:\Projects\AGN\AGN23001\04-Production\Water Resources\Stormwater Management\Site Plan\Full Buildout Model\Current Drawing\AGN23001-SCMG.dwg, 1/30/2025 4:40:47 PM, Mirabelle Javillana

STATE OF NORTH CAROLINA
DEPT. OF TRANSPORTATION
DIVISION OF HIGHWAYS
RALEIGH, N.C.

7-06

ENGLISH STANDARD DRAWING FOR

DRAINAGE STRUCTURE STEPS

SHEET 1 OF 1

840.66

NOTES:
INSTALL ALL STEPS PROTRUDING 4" FROM INSIDE FACE OF STRUCTURE WALL.
STEPS DIFFERING IN DIMENSIONS, CONFIGURATION, OR MATERIALS FROM THOSE SHOWN MAY ALSO BE USED PROVIDED THE CONTRACTOR HA
THE ENGINEER WITH DETAILS OF THE PROPOSED STEPS AND HAS RECEIVED WRITTEN APPROVAL FROM THE ENGINEER FOR THE USE OF SUCH

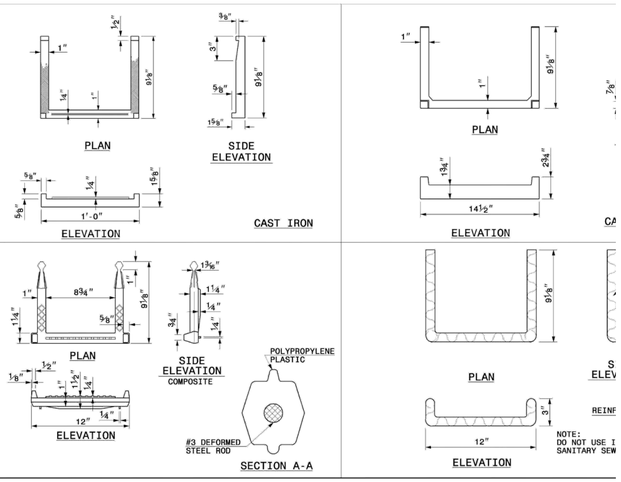

NOTE: RIPRAP TO EXTEND FROM TOE OF FOREBAY TO TOE OF MAIN POOL

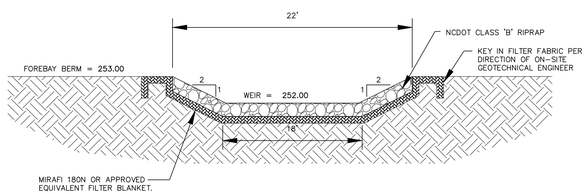

FOREBAY WEIR SPILLWAY CROSS-SECTION
N.T.S.

NOTES:
1. ALL REBAR TO BE #4 REBAR.
2. ALL REBAR AND ANGLES TO BE HOT-DIPPED GALVANIZED AND BE PROVIDED WITH AN EPOXY COATING.
3. THE HOT-DIPPED, GALVANIZED 2"x2"x1/4" ANGLES SHALL BE WELDED TO THE REBAR TRASH RACK. ONCE WELDED, THE ENTIRE ASSEMBLY SHALL BE PLACED ONTO THE RISER WITH ANGLES SITTING DIRECTLY ON TOP OF RISER.
4. TRASH RACK IS TO BE SECURELY FASTENED TO THE SPILLWAY RISER WITH A MINIMUM OF FOUR CORROSION-RESISTANT ANCHORS.
5. ACCESS HATCH SHALL ALIGN WITH STEPS IN RISER.

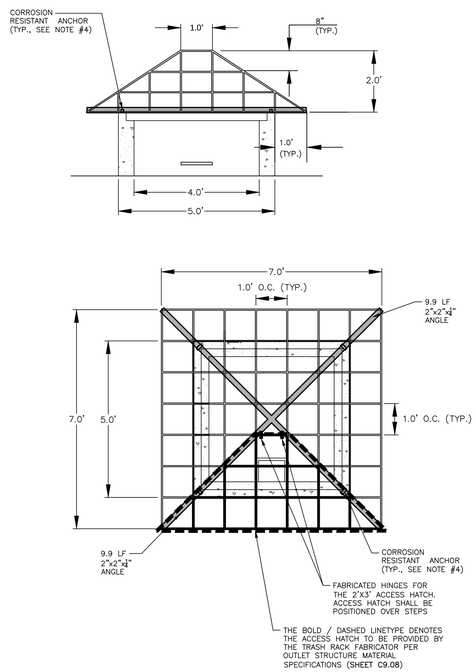

4'X4' RISER TRASH RACK DETAIL
N.T.S.

NOTE:

1. HAVILAND DRAINAGE PRODUCTS 4" ALUMINUM ANIMAL GUARD ITEM NUMBER AGS504 (OR ENGINEER APPROVED EQUIVALENT) TO BE INSTALLED AT OUTLET OF 4" HDPE PIPES

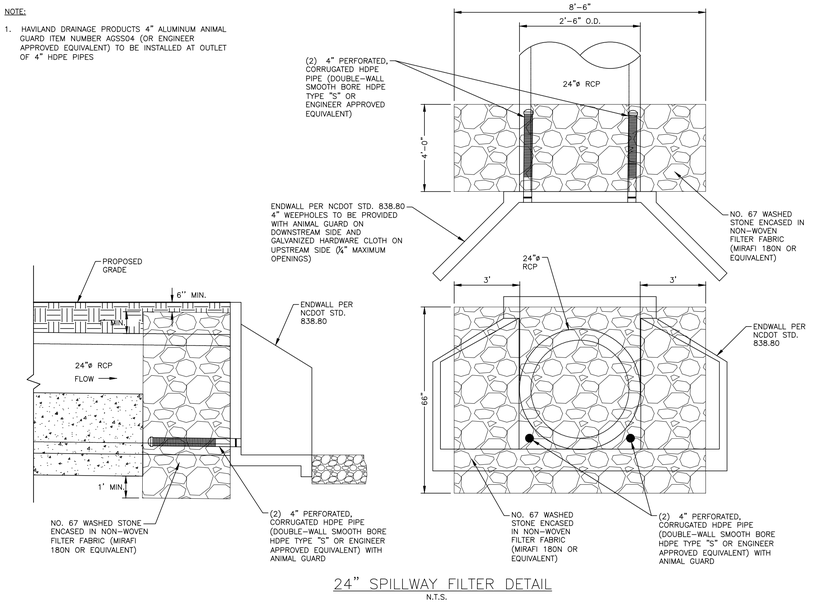

24" SPILLWAY FILTER DETAIL
N.T.S.

NOTE:

1. CONTRACTOR SHALL PROVIDE A JOINT IN THE OUTLET BARREL NO MORE THAN 5-FT FROM THE RISER.

BARREL PIPE CONCRETE CRADLE CONSTRUCTION SEQUENCE

1. BRING GRADE OF DAM EMBANKMENT TO SPRINGLINE OF PIPE ELEVATION.
2. EXCAVATE TRENCH FOR CRADLE AND BARREL PER DIMENSIONS ON DRAWINGS.
3. PLACE BARREL PIPE ON CONCRETE BLOCKS TO GRADE. AT THIS STEP, CONTRACTOR SHALL WRAP A DOUBLE LAYER OF NON-WOVEN GEOTEXTILE FABRIC AROUND EACH JOINT OF THE 24"ø O-RING RCP BARREL IN 2' WIDE STRIPS CENTERED ON JOINT.
4. PLACE CONCRETE FOR CRADLE FOR EACH SECTION FROM ONE SIDE OF THE TRENCH. ALLOW CONCRETE TO FILL ENTIRE AREA UNDER PIPE AND PIPE HAUNCHES AS TO LEAVE NO VOIDS UNDER THE PIPE BEFORE PLACING CONCRETE ON THE OPPOSITE SIDE OF THE TRENCH. PLACE ENTIRE CRADLE AS ONE LIFT (VERTICALLY) PER DRAWINGS.
5. ALLOW CRADLE TO CURE FOR A MINIMUM OF 7 DAYS BEFORE ANY VIBRATING COMPACTION EQUIPMENT IS USED IN THE VICINITY OF THE BARREL PIPE.
6. TRENCH TO BE BACKFILLED IN 5" LIFTS WHEN COMPACTION IS BY HAND. BACKFILL IS IN 8" LIFTS WHEN CONDUCTED BY MACHINE. MINIMUM OF 2 FEET COVER MUST BE PRESENT ON 24"ø RCP BEFORE DRIVING OVER WITH HEAVY EQUIPMENT.

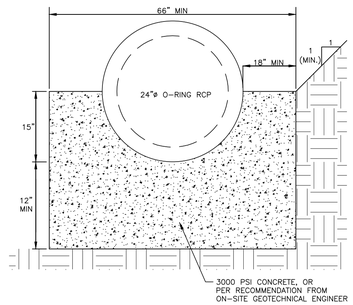

24" CONCRETE CRADLE DETAIL
N.T.S.

NOTES:

1. ALL REINFORCING STEEL IN RISER ANTI-FLOTATION BLOCK TO BE GRADE 60 #4 BARS FOR HORIZONTAL CROSSING AND GRADE 60 #4 BARS FOR VERTICAL CONNECTIONS.
2. INSIDE OF RISER BOTTOM TO BE FORMED WITH NON-SHRINK GROUT TO INVERT ELEVATION OF BARREL.
3. ALL PIPE PENETRATIONS THROUGH THE CONCRETE RISER STRUCTURE SHALL BE MADE WATERTIGHT.

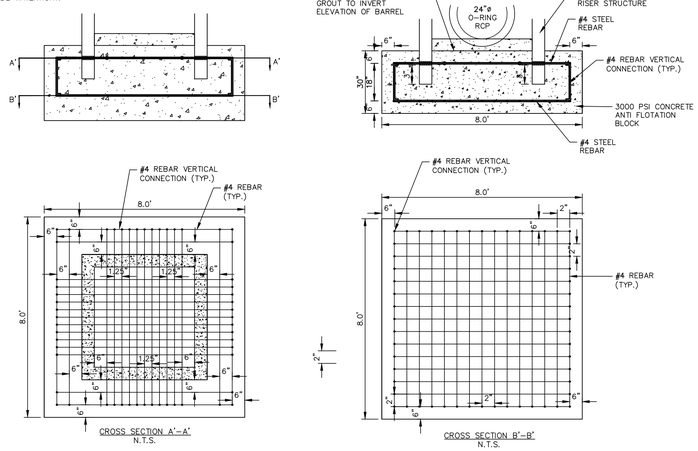

RISER/ANTI-FLOTATION BLOCK CONNECTION
N.T.S.

NOTES:

1. ALL REBAR TO BE #4 REBAR.
2. WRAP OUTSIDE OF PIPE WITH VOLCLAY WATERSTOP-RX® 101 (OR PRE-APPROVED EQUIVALENT) AT THE FACE OF THE PRECAST STRUCTURE WALL. PROVIDE 6" OVER LAP ON THE BOTTOM OF THE PIPE.

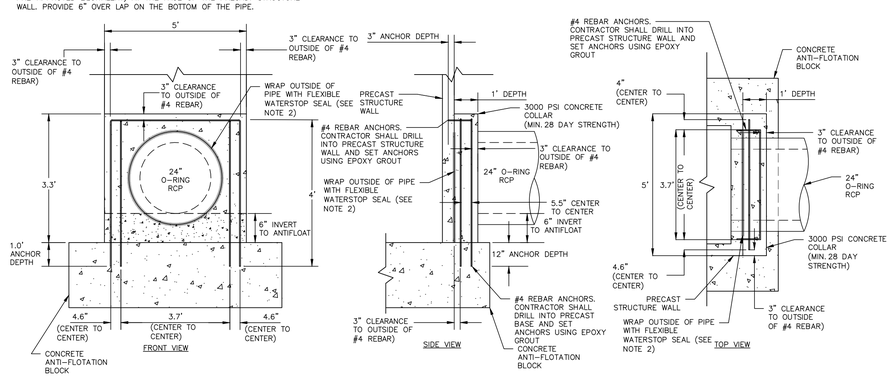

24"ø CONCRETE COLLAR DETAIL
N.T.S.

FINAL DRAWING - NOT RELEASED FOR CONSTRUCTION

X:\Projects\AGN\AGN23001\04-Production\Water Resources\Stormwater Management\Site Plan\Full Buildout Model\Current Drawings\AGN23001-SCMG.dwg, 1/30/2025 4:40:54 PM, Mirabelle Javillana

McADAMS
The John R. McAdams Company, Inc.
2905 Meridian Parkway
Durham, NC 27713

phone 919. 361. 5000
fax 919. 361. 2269
license number: C-0293, C-187

www.mcadamsco.com

CLIENT

ALLIANCE GROUP OF NC, LLC
7208 FALLS OF NEUSE RD, SUITE 101
RALEIGH, NORTH CAROLINA 27615
CONTACT: JACOB ANDERSON
PHONE: 919. 239. 9486

AGNC BROKERAGE | CONSULTING | PLANNING

PEARCE FARM - PHASES 1-3
CONSTRUCTION DRAWINGS - PACKAGE 1
BURLINGTON MILLS ROAD
TOWN OF ROLESVILLE, NORTH CAROLINA

CID-24-08

NORTH CAROLINA PROFESSIONAL ENGINEER SEAL 054404 MARIA C. TORRES — NOT FOR CONSTRUCTION

REVISIONS

NO.	DATE	
1	02. 03. 2025	REVISED PER TOWN, CITY AND COUNTY COMMENTS

PLAN INFORMATION

PROJECT NO.	AGN23001
FILENAME	AGN23001-SCMG
CHECKED BY	MCT
DRAWN BY	MMJ
SCALE	N.T.S.
DATE	12. 02. 2024

SHEET

SCM G DETAILS

C9.10

STORMWATER CONTROL MEASURE 'G' PLANTING PLAN SPECIFICATIONS

PLANT SCHEDULE

SYMBOL	CODE	QTY	COMMON NAME	BOTANICAL NAME	CONT	REMARKS
GROUND COVERS						
	AISM	230	Swamp Milkweed	Asclepias incarnata	4" pot	Shallow Land
	IVBF	228	Blue Flag Iris	Iris virginica	4" pot	Shallow Water
	LCCF	229	Cardinal Flower	Lobelia cardinalis	4" pot	Shallow Land
	LELL	231	Longleaf Lobelia	Lobelia elongata	4" pot	Shallow Water
	PCPW	233	Pickerel Weed	Pontederia cordata	4" pot	Shallow Water
	STSB	231	Softstem Bulrush	Schoenoplectus tabernaemontani	4" pot	Shallow Water

SEEDBED PREPARATION

1. CHISEL COMPACTED AREAS AND SPREAD TOPSOIL 3-4 INCHES DEEP OVER ADVERSE SOIL CONDITIONS. TOPSOIL SHOULD BE INCORPORATED INTO THE FINAL GRADING OF THE BASIN SIDE SLOPES AND SHALLOW LAND AND SHALLOW WATER AREAS. CONTRACTOR SHOULD SCARIFY THE TOP 3-4 INCHES OF THE COMPACTED FILL TO PROMOTE BONDING WITH TOPSOIL.
2. RIP THE ENTIRE AREA TO 6 INCHES DEPTH.
3. REMOVE ALL LOOSE ROCK, ROOTS, AND OTHER OBSTRUCTIONS LEAVING SURFACE REASONABLY SMOOTH AND UNIFORM.
4. PER ONE TIME ONLY, APPLY AGRICULTURAL LIME, FERTILIZER, AND SUPERPHOSPHATE UNIFORMLY AND MIX WITH SOIL.
5. CONTINUE TILLAGE UNTIL A WELL-PULVERIZED, FIRM REASONABLY UNIFORM SEEDBED IS PREPARED 4 TO 6 INCHES DEEP.
6. SEED ON A FRESHLY PREPARED SEEDBED AND COVER.
7. MULCH IMMEDIATELY AFTER SEEDING AND ANCHOR MULCH.
8. INSPECT ALL SEEDED AREAS AND MAKE NECESSARY REPAIRS OR RESEEDINGS WITHIN THE PLANTING SEASON, IF POSSIBLE. AFTER PERMANENT COVER IS ESTABLISHED.
9. CONSULT CONSERVATION INSPECTOR ON MAINTENANCE TREATMENT.

TEMPORARY SEEDING SCHEDULE

SEEDING DATE	SEEDING MIXTURE	APPLICATION RATE
JAN 1 - MAY 1	RYE (GRAIN)	120 LBS/AC
	KOBE LESPEDEZA	50 LBS/AC
MAY 1 - AUG 15	GERMAN MILLET	40 LBS/AC
AUG 15 - DEC 30	RYE (GRAIN)	120 LBS/AC

SOIL AMENDMENTS
FOLLOW RECOMMENDATIONS OF SOIL TESTS OR APPLY 2,000 LB/AC GROUND AGRICULTURE LIMESTONE AND 750 LB/AC 10-10-10 FERTILIZER (FROM AUG 15 - DEC 30, INCREASE 10-10-10 FERTILIZER TO 1000 LB/AC).

MULCH
APPLY 4000 LB/AC STRAW. ANCHOR STRAW BY TACKING WITH ASPHALT, NETTING, OR A MULCH ANCHORING TOOL. A DISK WITH BLADES SET NEARLY STRAIGHT CAN BE USED AS A MULCH ANCHORING TOOL.

MAINTENANCE
JAN 1 - AUG 15: REFERTILIZE IF GROWTH IS NOT FULLY ADEQUATE. RESEED, REFERTILIZE, AND MULCH IMMEDIATELY FOLLOWING EROSION OR OTHER DAMAGE.

AUG 15 - DEC 30: REPAIR AND REFERTILIZE DAMAGED AREAS IMMEDIATELY. TOP DRESS WITH 50 LB/AC OF NITROGEN IN MARCH. IF IT IS NECESSARY TO EXTEND TEMPORARY COVER BEYOND JUNE 15, OVERSEED WITH 50 LB/AC KOBE LESPEDEZA IN LATE FEBRUARY OR EARLY MARCH.

NOTE: USE THE TEMPORARY SEEDING SCHEDULE ONLY WHEN DATE IS NOT CORRECT TO USE THE PERMANENT SEEDING SCHEDULE.

PERMANENT SEEDING SCHEDULE (DAM EMBANKMENTS)

SEEDING DATE	SEEDING MIXTURE	APPLICATION RATE
MARCH 1 - JUNE 31	HYBRID BERMUDA GRASS	1 LBS/1000 SF (OR MANUFACTURER SPECIFICATIONS)
SEPT 1 -OCT 31		1 LBS/1000 SF (OR MANUFACTURER SPECIFICATIONS)

SOIL AMENDMENTS
FOLLOW RECOMMENDATIONS OF SOIL TESTS OR APPLY 4,000 LB/AC GROUND AGRICULTURE LIMESTONE AND 1000 LB/AC 10-10-10 FERTILIZER.

MULCH
APPLY 4000 LB/AC STRAW. ANCHOR STRAW BY TACKING WITH ASPHALT, NETTING, OR A MULCH ANCHORING TOOL. A DISK WITH BLADES SET NEARLY STRAIGHT CAN BE USED AS A MULCH ANCHORING TOOL.

MAINTENANCE
INSPECT AND REPAIR MULCH FREQUENTLY. REFERTILIZE IN LATE WINTER OF THE FOLLOWING YEAR; USE SOIL TESTS OR APPLY 150 LB/AC 10-10-10 FERTILIZER. MOW REGULARLY TO A HEIGHT OF 2-4 INCHES.

NOTE: PERMANENT SEEDING SCHEDULE IS FOR SLOPES OF THE BASIN AND TOP OF BERM.

PLANTING INSTRUCTIONS

PLANTING TECHNIQUES
A. INSURE THAT ROOTS, ONCE REMOVED FROM POT, ARE STRAIGHTENED AND FACE DOWNWARD.
B. CREATE PLANTING AREA FOR EACH PLANT AND EXCAVATE PIT.
C. PLACE PLANTS IN PIT INSURING ROOTS ARE FACING COMPLETELY DOWNWARD.
D. HEEL IN SOIL AROUND PLANT AND PROCEED TO NEXT PLANTING LOCATION.
E. NEWLY PLANTED PLANTS NEED TO BE FASTENED TO THE SUBSTRATE FOR THE ESTABLISHMENT OF NEW ROOTS.
F. ROOTS SHALL BE SPREAD IN THEIR NORMAL POSITION. ALL BROKEN OR FRAYED ROOTS HALL BE CUT OFF CLEANLY.
G. THE DIAMETER OF THE PITS FOR ALL VEGETATIVE STOCK SHALL BE AT LEAST THREE TIMES THE DIAMETER OF THE ROOT MASS. PLANT PIT WALL SHALL BE SCARIFIED PRIOR TO PLANT INSTALLATION.
H. SET THE PLANTS UPRIGHT, IN THE CENTER OF THE PIT. THE BOTTOM OF THE ROOT MASS SHOULD BE RESTING ON UNDISTURBED SOIL.
I. PLACE THE BACKFILL AROUND THE BASE AND SIDES OF THE ROOT MASS, AND WORK EACH LAYER TO SETTLE BACKFILL AND TO ELIMINATE VOIDS AND AIR POCKETS. WHEN PIT IS APPROXIMATELY 2/3 FULL, WATER THOROUGHLY BEFORE PLACING REMAINDER OF THE BACKFILL. WATER AGAIN AFTER PLACING FINAL LAYER OF BACKFILL.
J. BROKEN OR DAMAGED PARTS WILL BE CUT BACK TO UNDAMAGED TISSUE, LEAVING AS MUCH GREEN BASAL TISSUE AS POSSIBLE ABOVE THE ROOTS. IF MORE THAN FIFTY PERCENT (50%) OF THE PLANT IS DAMAGED THEN CONTRACTOR SHALL REPLACE THE PLANT.

CONTAINER STOCK / BARE ROOT
A. STOCK SHALL HAVE BEEN GROWN IN A CONTAINER LONG ENOUGH FOR THE ROOT SYSTEM TO HAVE DEVELOPED SUFFICIENTLY TO HOLD ITS SOIL TOGETHER ONCE REMOVED FROM THE CONTAINER.
B. CONTAINER PLANTS WILL NEED TO BE WATERED REGULARLY AND PLACED IN SHADY CONDITIONS UNTIL PLANTING OCCURS.
C. BARE ROOT PLANTS ARE FOR IMMEDIATE PLANTING, OTHERWISE SEE D) BELOW.
D. IF BARE ROOTS SPECIMENS ARE NOT TO BE PLANTED WITHIN FOUR (4) DAYS, TEMPORARY HOLDING OF BARE ROOT SPECIMENS ARE TO BE COVERED ENTIRELY BY A SUITABLE MEDIUM (ETC. SOIL, SAWDUST, MULCH OR THE LIKE) AND WATERED REGULARLY SO AS TO NOT DRY OUT.

PLANT LOCATIONS
A. NEW PLANTINGS SHALL BE LOCATED WHERE SHOWN ON PLAN EXCEPT WHERE CHANGES HAVE BEEN MADE IN PROPOSED CONSTRUCTION.
B. NECESSARY ADJUSTMENTS SHALL BE MADE ONLY AFTER APPROVAL BY THE OWNER OR THE OWNER'S REPRESENTATIVE.

WATER
WATER SHALL BE POTABLE AND SHALL NOT CONTAIN ELEMENTS TOXIC TO PLANT LIFE.

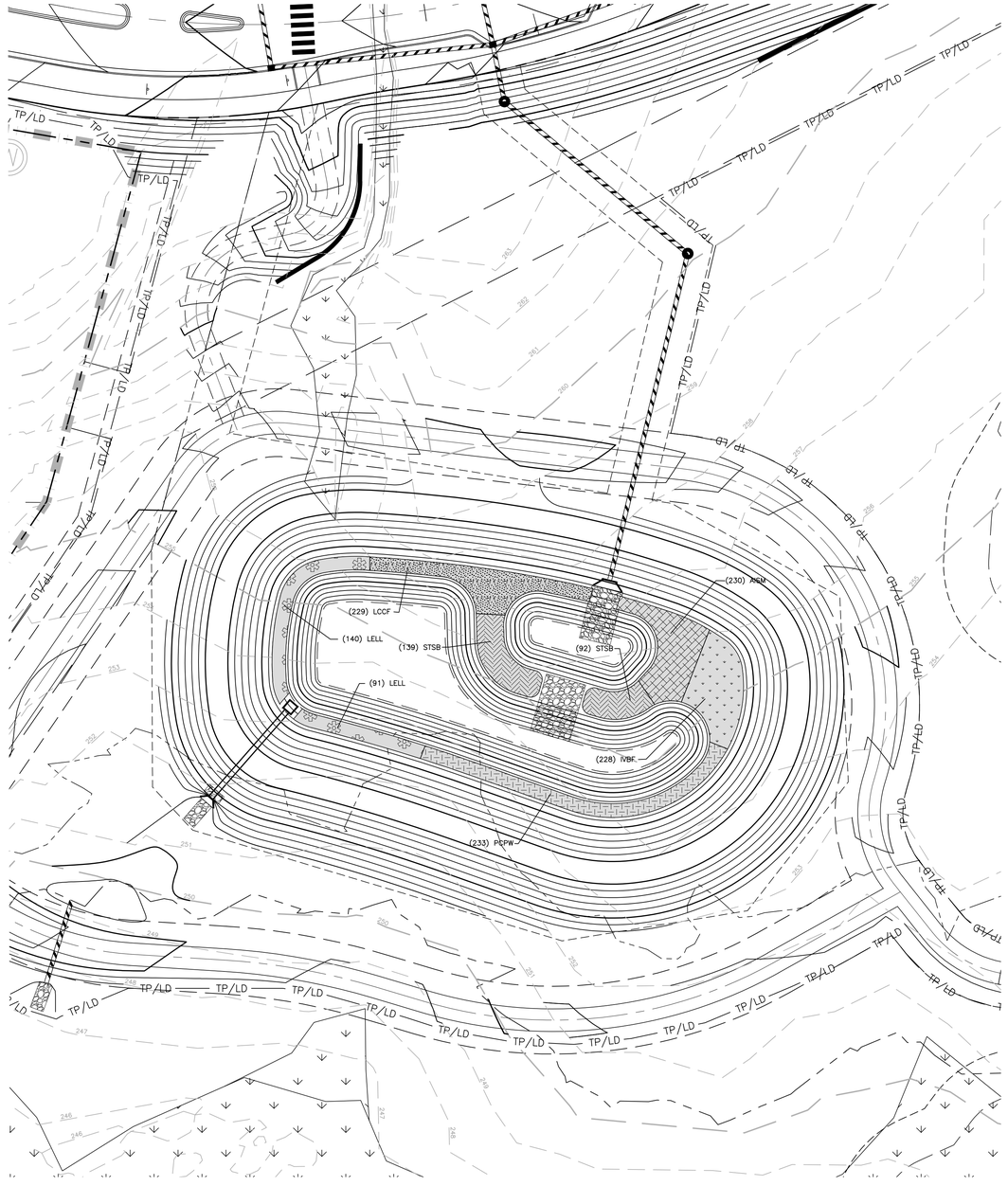

STORMWATER WETPOND 'G' LANDSCAPE PLAN
1" = 30'

FINAL DRAWING - NOT RELEASED FOR CONSTRUCTION

MCADAMS
The John R. McAdams Company, Inc.
2905 Meridian Parkway
Durham, NC 27713

phone 919. 361. 5000
fax 919. 361. 2269
license number: C-0293, C-187

www.mcadamsco.com

CLIENT

ALLIANCE GROUP OF NC, LLC
7208 FALLS OF NEUSE RD, SUITE 101
RALEIGH, NORTH CAROLINA 27615
CONTACT: JACOB ANDERSON
PHONE: 919. 239. 9486

AGNC BROKERAGE | CONSULTING | PLANNING

PEARCE FARM - PHASES 1-3
CONSTRUCTION DRAWINGS - PACKAGE 1
BURLINGTON MILLS ROAD
TOWN OF ROLESVILLE, NORTH CAROLINA

CID-24-08

NORTH CAROLINA PROFESSIONAL SEAL 054424 ENGINEER MARIA C. TORRES — NOT FOR CONSTRUCTION

REVISIONS

NO.	DATE	
1	02. 03. 2025	REVISED PER TOWN, CITY AND COUNTY COMMENTS

PLAN INFORMATION

PROJECT NO.	AGN23001
FILENAME	AGN23001-SCMG
CHECKED BY	MCT
DRAWN BY	MMJ
SCALE	1" = 30'
DATE	12. 02. 2024

SHEET

SCM G
LANDSCAPE PLAN
C9.11

X:\Projects\AGN\AGN23001\04-Production\Water Resources\Stormwater Management\Site Plan\Full Buildout Model\Current Drawing\AGN23001-SCMG.dwg, 1/31/2025 1:46:24 PM, Mirabelle Jawdiana

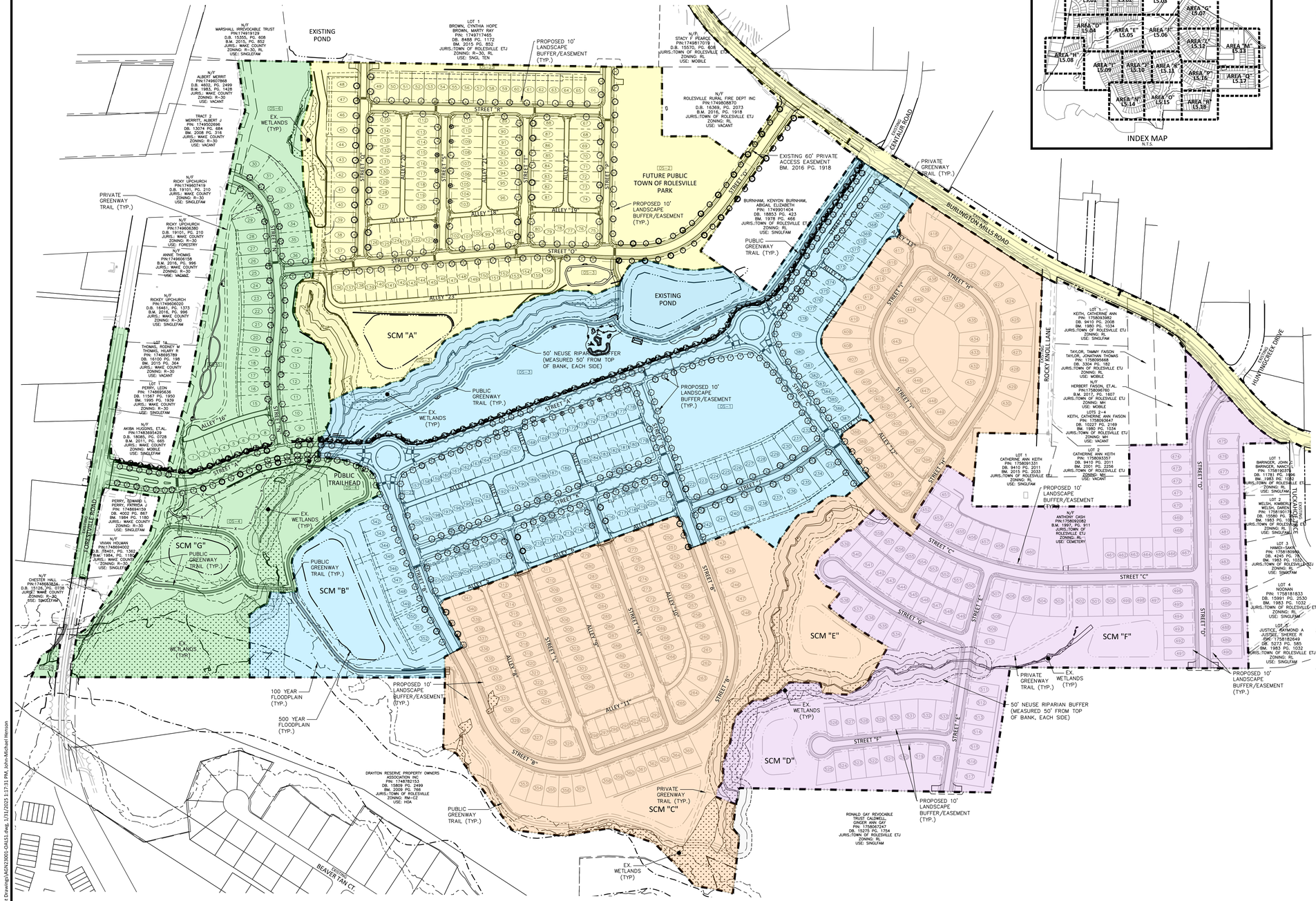

PLANT SCHEDULE

SYMBOL	CODE	BOTANICAL NAME
CANOPY TREES		
	ARA	Acer rubrum 'Autumn Blaze'
	ARR	Acer rubrum 'Red Sunset'
	ARS	Acer rubrum 'Summer Red'
	ASL	Acer saccharum 'Legacy'
	CBE	Carpinus betulus
	CIP	Carya illinoinensis
	CBS	Catalpa bignoniodes
	FGA	Fagus grandifolia
	FPG	Fraxinus pennsylvanica
	GBA	Ginkgo biloba 'Autumn Gold' TM
	LTT	Liriodendron tulipifera
	MGD	Magnolia grandiflora 'D.D. Blanchard' TM
	NSS	Nyssa sylvatica
	POA	Platanus occidentalis
	QAW	Quercus alba
	QCS	Quercus coccinea
	QLO	Quercus lyrata
	QMB	Quercus marilandica
	QNN	Quercus nuttallii
	QPP	Quercus palustris
	QPW	Quercus phellos
	QVS	Quercus virginiana
	TDB	Taxodium distichum
	UAP	Ulmus americana 'Princeton'
	UPB	Ulmus parvifolia 'Bosque'
	ZSG	Zelkova serrata 'Green Vase'
	ZSM	Zelkova serrata 'Myrimar'
UNDERSTORY TREES		
	CCP	Cercis canadensis 'Forest Pansy' TM
EVERGREEN SHRUBS		
	IVND	Ilex vomitoria 'Nana'
	IPFS	Illicium parviflorum 'Florida Sunshine'
	MMWS	Mahonia x media 'Winter Sun'
	OFSO	Osmanthus fragrans
	VTAR	Viburnum tinus

SITE LEGEND

- SIGNAGE
- SITE LIGHTING
- LIGHT POLE
- TRAFFIC DIRECTIONAL ARROW
- ACC — ACCESSIBLE PARKING STALL
- VAN — VAN ACCESSIBLE PARKING STALL
- XX — PARKING SPACE COUNT
- ACCESSIBLE RAMPS
- PHASE LINE
- PROPERTY LINE
- RIGHT-OF-WAY LINE
- LOT LINE
- EASEMENT LINE
- CENTERLINE
- 10' LANDSCAPE BUFFER/EASEMEMT

PHASE LEGEND

- PHASE 1
- PHASE 2
- PHASE 3
- PHASE 4
- PHASE 5

GRAPHIC SCALE
0 100 200 400
1 inch = 200 ft.

FINAL DRAWING - NOT RELEASED FOR CONSTRUCTION

X:\Projects\AGN\AGN23001\04-Production\Engineering\Construction Drawings\Current Drawings\AGN23001-OALS1.dwg, 1/31/2025 1:17:31 PM, John-Michael Henson

McADAMS
The John R. McAdams Company, Inc.
2905 Meridian Parkway
Durham, NC 27713

phone 919. 361. 5000
fax 919. 361. 2269
license number: C-0293, C-187

www.mcadamsco.com

CLIENT

ALLIANCE GROUP OF NC, LLC
7208 FALLS OF NEUSE RD, SUITE 101
RALEIGH, NORTH CAROLINA 27615
CONTACT: JACOB ANDERSON
PHONE: 919. 239. 9486

AGNC BROKERAGE | CONSULTING | PLANNING

PEARCE FARM - PHASES 1-3
CONSTRUCTION DRAWINGS - PACKAGE 1

BURLINGTON MILLS ROAD
TOWN OF ROLESVILLE, NORTH CAROLINA

CID-24-08

NORTH CAROLINA LICENSED LANDSCAPE ARCHITECT SARA RUNGE DONOHOE 2027 FOR PERMIT NOT FOR CONSTRUCTION

REVISIONS

NO.	DATE	
1	02. 03. 2025	REVISED PER TOWN, CITY AND COUNTY COMMENTS

PLAN INFORMATION

PROJECT NO.	AGN23001
FILENAME	AGN23001-OALS1
CHECKED BY	JMH
DRAWN BY	SMO
SCALE	1"=200'
DATE	12. 02. 2024

SHEET

OVERALL LANDSCAPE PLAN

L5.00

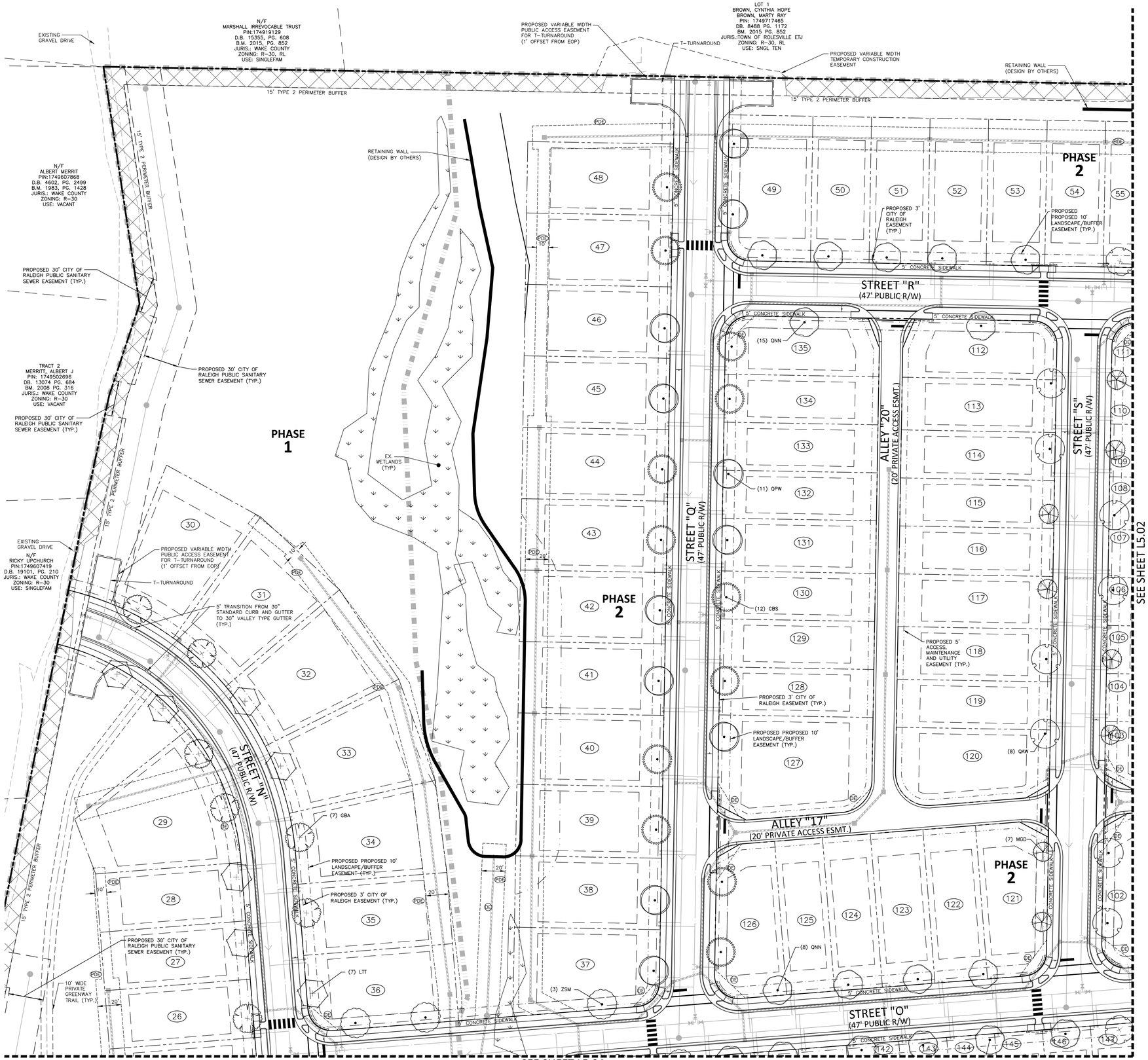

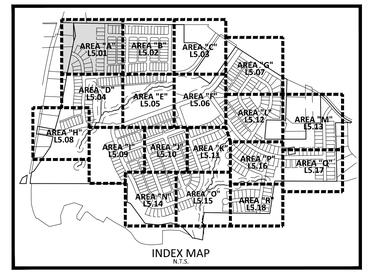

INDEX MAP
N.T.S.

SITE LEGEND

- SIGNAGE
- SITE LIGHTING
- LIGHT POLE
- TRAFFIC DIRECTIONAL ARROW
- ACC / VAN — ACCESSIBLE PARKING STALL / VAN ACCESSIBLE PARKING STALL
- (XX) — PARKING SPACE COUNT
- ACCESSIBLE RAMPS
- PHASE LINE
- PROPERTY LINE
- RIGHT-OF-WAY LINE
- LOT LINE
- EASEMENT LINE
- CENTERLINE
- 10' LANDSCAPE BUFFER/EASEMENT
- 3' CITY OF RALEIGH EASEMENT
- 5' ACCESS, MAINTENANCE AND UTILITY EASEMENT (ALLEYS)

KEY LEGEND

- (PDD) PRIVATE STORM DRAINAGE EASEMENT
- (PD) PUBLIC STORM DRAINAGE EASEMENT

PLANT SCHEDULE AREA 'A'

SYMBOL	CODE	BOTANICAL / COMMON NAME
CANOPY TREES		
	ARA	Acer rubrum 'Autumn Blaze' Autumn Blaze Red Maple
	CBS	Catalpa bignoniodes Southern Catalpa
	GBA	Ginkgo biloba 'Autumn Gold' TM Maidenhair Tree
	LTT	Liriodendron tulipifera Tulip Tree
	MGD	Magnolia grandiflora 'D.D. Blanchard' TM Southern Magnolia
	QAW	Quercus alba White Oak
	QNN	Quercus nuttallii Nuttall Oak
	QPW	Quercus phellos Willow Oak
	ZSM	Zelkova serrata 'Myrimar' Myrimar Zelkova

GRAPHIC SCALE
0 20 40 80
1 inch = 40 ft.

FINAL DRAWING - NOT RELEASED FOR CONSTRUCTION

McADAMS
The John R. McAdams Company, Inc.
2905 Meridian Parkway
Durham, NC 27713

phone 919. 361. 5000
fax 919. 361. 2269
license number: C-0293, C-187

www.mcadamsco.com

CLIENT

ALLIANCE GROUP OF NC, LLC
7208 FALLS OF NEUSE RD, SUITE 101
RALEIGH, NORTH CAROLINA 27615
CONTACT: JACOB ANDERSON
PHONE: 919. 239. 9486

AGNC BROKERAGE | CONSULTING | PLANNING

PEARCE FARM - PHASES 1-3
CONSTRUCTION DRAWINGS - PACKAGE 1
BURLINGTON MILLS ROAD
TOWN OF ROLESVILLE, NORTH CAROLINA

CID-24-08

NORTH CAROLINA LANDSCAPE ARCHITECT SEAL 3984 SARA RUNGE DONOHOE 2027 NOT FOR CONSTRUCTION

REVISIONS

NO.	DATE	
1	02. 03. 2025	REVISED PER TOWN, CITY AND COUNTY COMMENTS

PLAN INFORMATION

PROJECT NO.	AGN23001
FILENAME	AGN23001-LS1
CHECKED BY	JMH
DRAWN BY	SMO
SCALE	1"=40'
DATE	12. 02. 2024

SHEET

LANDSCAPE PLAN AREA "A"

L5.01

X:\Projects\AGN\AGN23001\04-Production\Engineering\Construction Drawings\Current Drawing\AGN23001-LS1.dwg, 1/31/2025 1:04:59 PM, John-Michael Henson

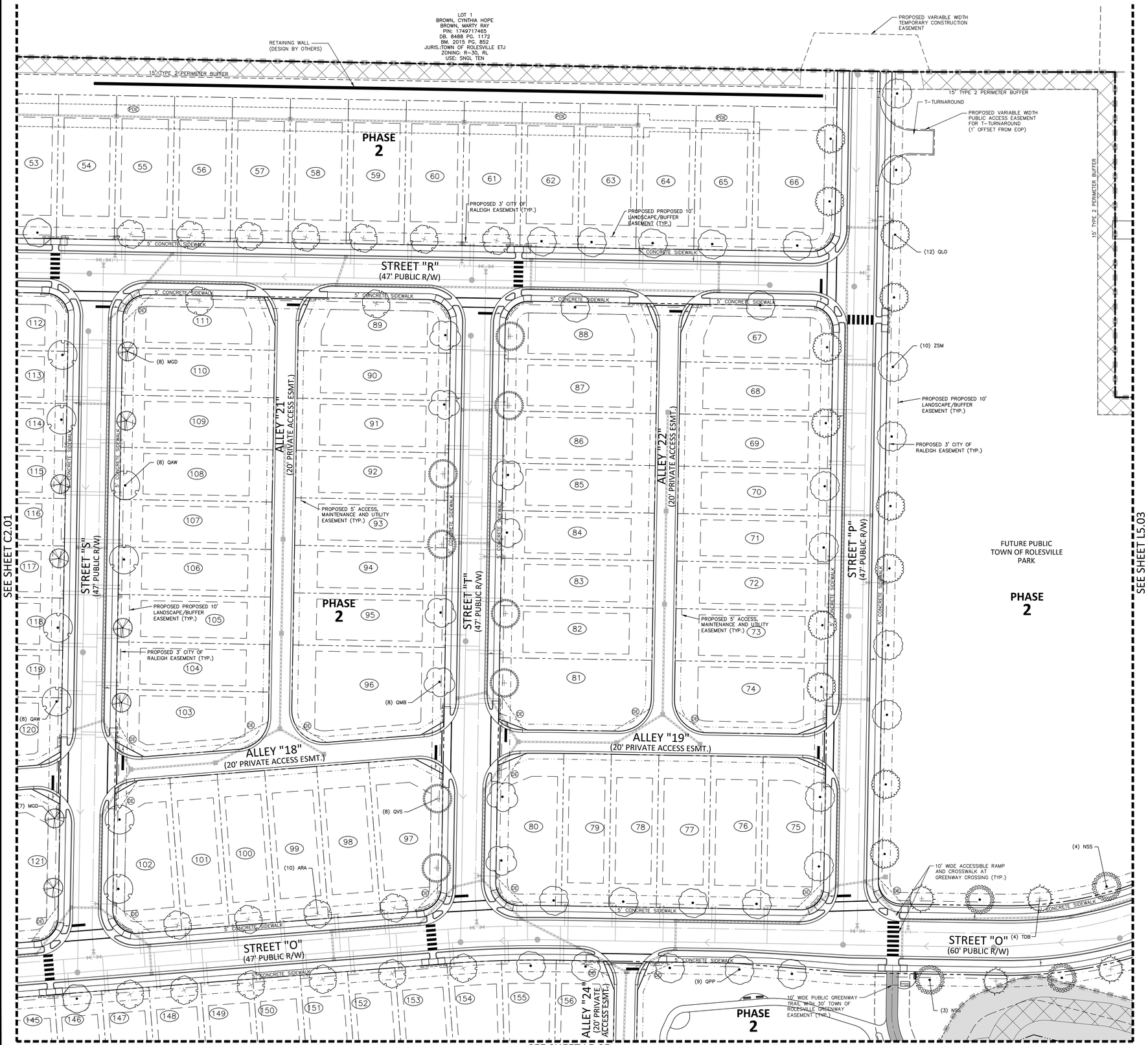

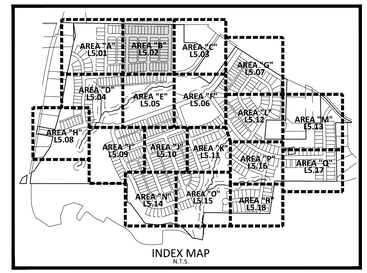

INDEX MAP
N.T.S.

SITE LEGEND

- SIGNAGE
- SITE LIGHTING
- LIGHT POLE
- TRAFFIC DIRECTIONAL ARROW
- ACC — ACCESSIBLE PARKING STALL
- VAN — VAN ACCESSIBLE PARKING STALL
- (XX) — PARKING SPACE COUNT
- ACCESSIBLE RAMPS
- PHASE LINE
- PROPERTY LINE
- RIGHT-OF-WAY LINE
- LOT LINE
- EASEMENT LINE
- CENTERLINE
- 10' LANDSCAPE BUFFER/EASEMENT
- 3' CITY OF RALEIGH EASEMENT
- 5' ACCESS, MAINTENANCE AND UTILITY EASEMENT (ALLEYS)

KEY LEGEND

- (PDE) PRIVATE STORM DRAINAGE EASEMENT
- (PE) PUBLIC STORM DRAINAGE EASEMENT

PLANT SCHEDULE AREA 'B'

SYMBOL	CODE	BOTANICAL / COMMON NAME
CANOPY TREES		
+	ARA	Acer rubrum 'Autumn Blaze' Autumn Blaze Red Maple
+	MGD	Magnolia grandiflora 'D.D. Blanchard' TM Southern Magnolia
•	NSS	Nyssa sylvatica Sour Gum
•	QAW	Quercus alba White Oak
•	QLO	Quercus lyrata Overcup Oak
•	QMB	Quercus marilandica Blackjack Oak
•	QNN	Quercus nuttallii Nuttall Oak
•	QPP	Quercus palustris Pin Oak
+	QVS	Quercus virginiana Southern Live Oak
+	TDB	Taxodium distichum Bald Cypress
•	ZSM	Zelkova serrata 'Myrimar' Myrimar Zelkova

GRAPHIC SCALE
0 20 40 80
1 inch = 40 ft.

FINAL DRAWING - NOT RELEASED FOR CONSTRUCTION

McADAMS
The John R. McAdams Company, Inc.
2905 Meridian Parkway
Durham, NC 27713

phone 919. 361. 5000
fax 919. 361. 2269
license number: C-0293, C-187

www.mcadamsco.com

CLIENT

ALLIANCE GROUP OF NC, LLC
7208 FALLS OF NEUSE RD, SUITE 101
RALEIGH, NORTH CAROLINA 27615
CONTACT: JACOB ANDERSON
PHONE: 919. 239. 9486

AGNC BROKERAGE | CONSULTING | PLANNING

PEARCE FARM - PHASES 1-3
CONSTRUCTION DRAWINGS - PACKAGE 1

BURLINGTON MILLS ROAD
TOWN OF ROLESVILLE, NORTH CAROLINA

CID-24-08

NORTH CAROLINA LANDSCAPE ARCHITECT SEAL 3984 RUNGE DONOHOE 2027 — PRELIMINARY NOT FOR CONSTRUCTION

REVISIONS

NO.	DATE	
1	02. 03. 2025	REVISED PER TOWN, CITY AND COUNTY COMMENTS

PLAN INFORMATION

PROJECT NO.	AGN23001
FILENAME	AGN23001-LS1
CHECKED BY	JMH
DRAWN BY	SMO
SCALE	1"=40'
DATE	12. 02. 2024

SHEET

LANDSCAPE PLAN AREA "B"

L5.02

X:\Projects\AGN\AGN23001\04-Production\Engineering\Construction Drawings\Current Drawing\AGN23001-LS1.dwg, 1/31/2025 1:05:19 PM, John-Michael Henson

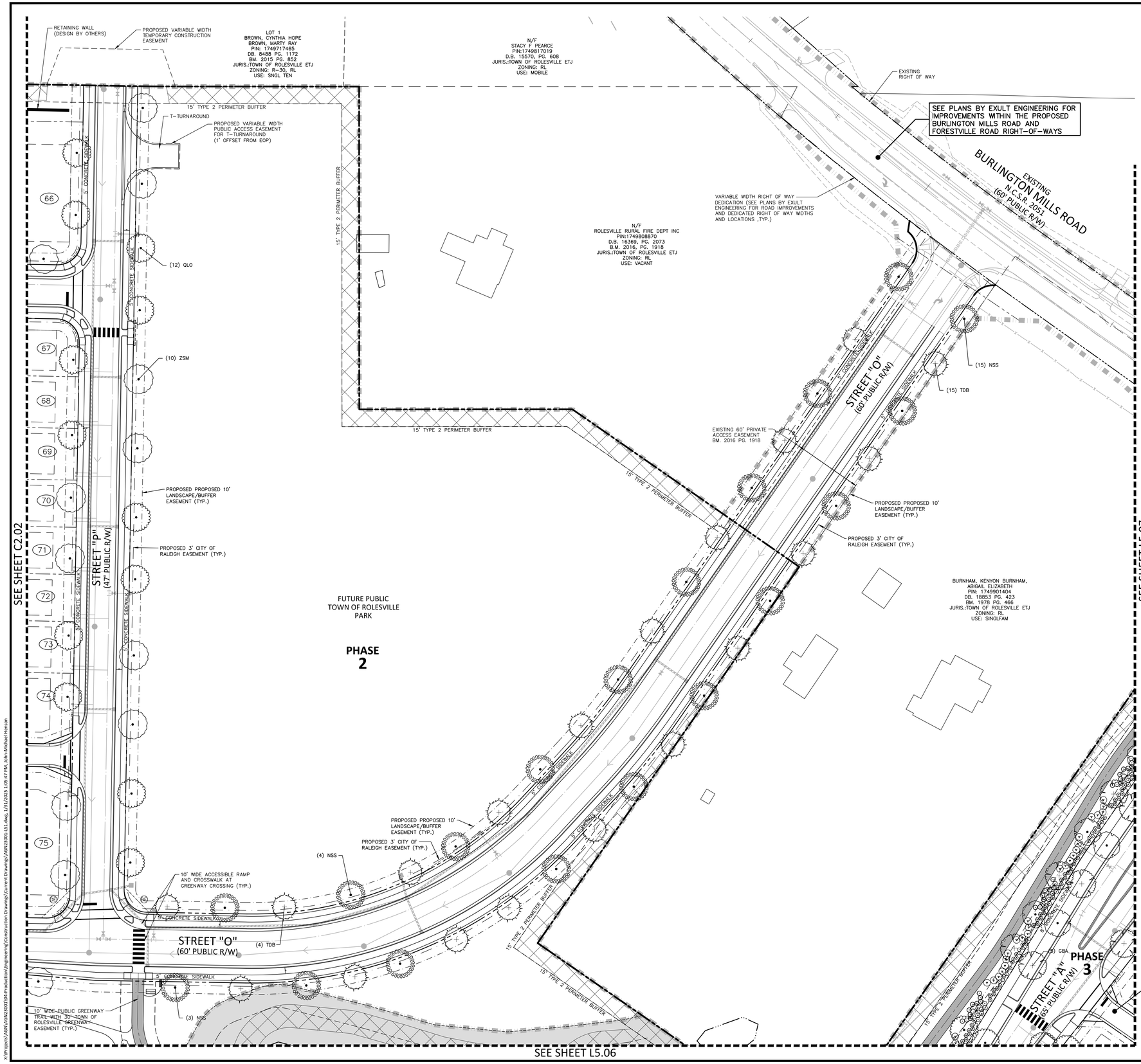

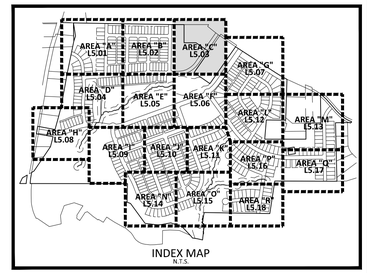

INDEX MAP
N.T.S.

SITE LEGEND

- SIGNAGE
- SITE LIGHTING
- LIGHT POLE
- TRAFFIC DIRECTIONAL ARROW
- ACC — ACCESSIBLE PARKING STALL
- VAN — VAN ACCESSIBLE PARKING STALL
- XX — PARKING SPACE COUNT
- ACCESSIBLE RAMPS
- PHASE LINE
- PROPERTY LINE
- RIGHT-OF-WAY LINE
- LOT LINE
- EASEMENT LINE
- CENTERLINE
- 10' LANDSCAPE BUFFER/EASEMENT
- 3' CITY OF RALEIGH EASEMENT
- 5' ACCESS, MAINTENANCE AND UTILITY EASEMENT (ALLEYS)

KEY LEGEND

- PDE — PRIVATE STORM DRAINAGE EASEMENT
- PE — PUBLIC STORM DRAINAGE EASEMENT

PLANT SCHEDULE AREA 'C'

SYMBOL	CODE	BOTANICAL / COMMON NAME
CANOPY TREES		
	ARS	Acer rubrum 'Summer Red' Summer Red Red Maple
	GBA	Ginkgo biloba 'Autumn Gold' TM Maidenhair Tree
	NSS	Nyssa sylvatica Sour Gum
	QLO	Quercus lyrata Overcup Oak
	QPP	Quercus palustris Pin Oak
	TDB	Taxodium distichum Bald Cypress
	ZSM	Zelkova serrata 'Myrimar' Myrimar Zelkova
UNDERSTORY TREES		
	CCP	Cercis canadensis 'Forest Pansy' TM Forest Pansy Redbud
EVERGREEN SHRUBS		
	IVND	Ilex vomitoria 'Nana' Dwarf Yaupon
	IPFS	Illicium parviflorum 'Florida Sunshine' Florida Sunshine Anise Tree
	MMWS	Mahonia x media 'Winter Sun' Mahonia hybrid
	OFSO	Osmanthus fragrans Sweet Olive
	VTAR	Viburnum tinus Arrowwood

GRAPHIC SCALE
0 20 40 80
1 inch = 40 ft.

FINAL DRAWING - NOT RELEASED FOR CONSTRUCTION

McADAMS
The John R. McAdams Company, Inc.
2905 Meridian Parkway
Durham, NC 27713

phone 919. 361. 5000
fax 919. 361. 2269
license number: C-0293, C-187

www.mcadamsco.com

CLIENT

ALLIANCE GROUP OF NC, LLC
7208 FALLS OF NEUSE RD, SUITE 101
RALEIGH, NORTH CAROLINA 27615
CONTACT: JACOB ANDERSON
PHONE: 919. 239. 9486

AGNC BROKERAGE | CONSULTING | PLANNING

PEARCE FARM - PHASES 1-3
CONSTRUCTION DRAWINGS - PACKAGE 1
BURLINGTON MILLS ROAD
TOWN OF ROLESVILLE, NORTH CAROLINA

CID-24-08

NORTH CAROLINA LANDSCAPE ARCHITECT SEAL 3884 SARA RUNGE DONOHOE 2027
PRELIMINARY NOT FOR CONSTRUCTION

REVISIONS

NO.	DATE	
1	02. 03. 2025	REVISED PER TOWN, CITY AND COUNTY COMMENTS

PLAN INFORMATION

PROJECT NO.	AGN23001
FILENAME	AGN23001-LS1
CHECKED BY	JMH
DRAWN BY	SMO
SCALE	1"=40'
DATE	12. 02. 2024

SHEET

LANDSCAPE PLAN AREA "C"
L5.03

X:\Projects\AGN\AGN23001\04-Production\Engineering\Construction Drawings\Current Drawings\AGN23001-LS1.dwg, 1/31/2025 1:05:47 PM, John-Michael Henson

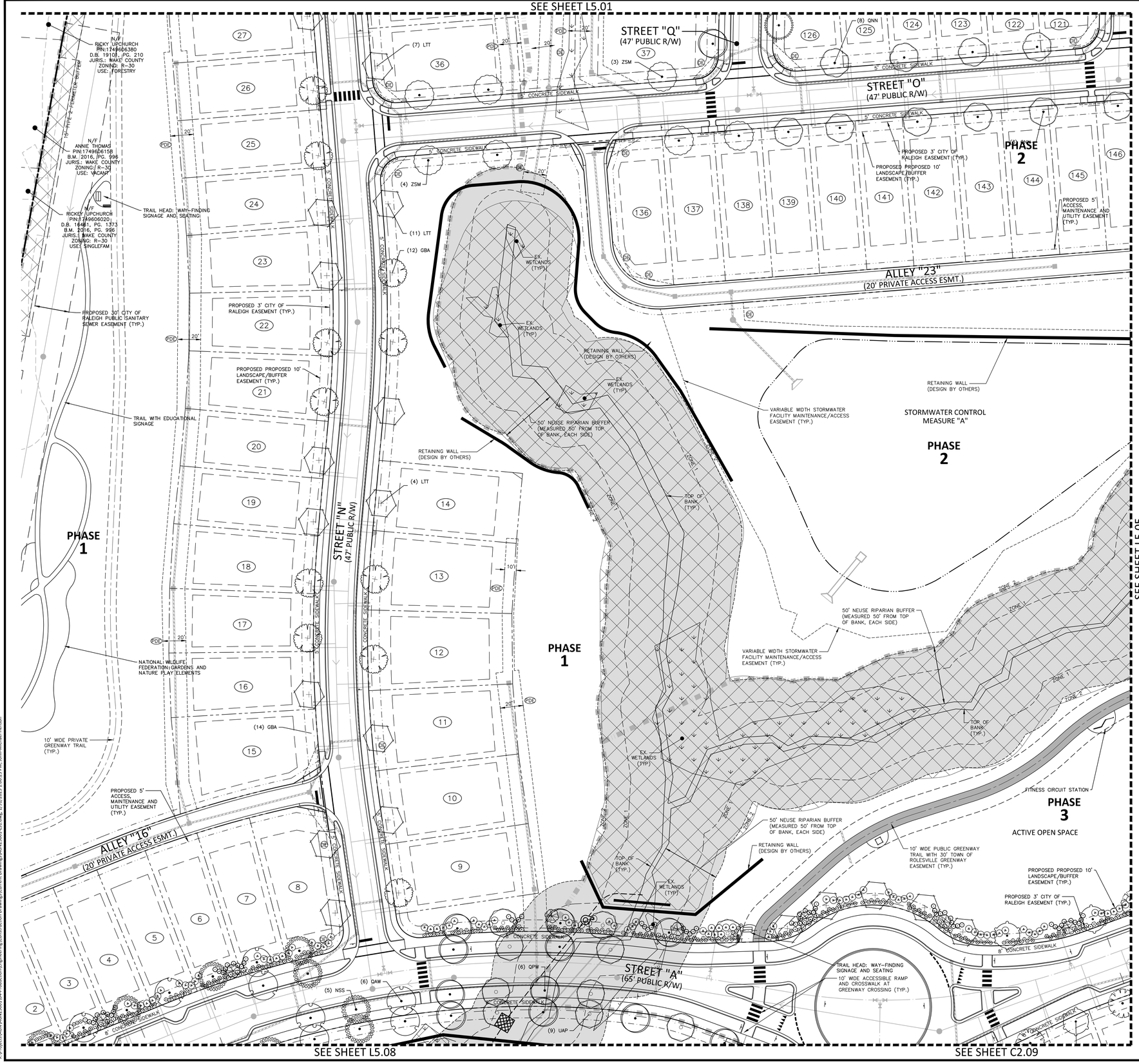

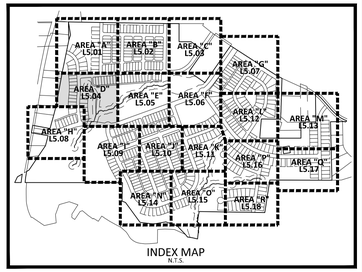

INDEX MAP
N.T.S.

SITE LEGEND

- SIGNAGE
- SITE LIGHTING
- LIGHT POLE
- TRAFFIC DIRECTIONAL ARROW
- ACC — ACCESSIBLE PARKING STALL
- VAN — VAN ACCESSIBLE PARKING STALL
- (XX) — PARKING SPACE COUNT
- ACCESSIBLE RAMPS
- PHASE LINE
- PROPERTY LINE
- RIGHT-OF-WAY LINE
- LOT LINE
- EASEMENT LINE
- CENTERLINE
- 10' LANDSCAPE BUFFER/EASEMENT
- 3' CITY OF RALEIGH EASEMENT
- 5' ACCESS, MAINTENANCE AND UTILITY EASEMENT (ALLEYS)

KEY LEGEND

- PDE — PRIVATE STORM DRAINAGE EASEMENT
- PUBLIC STORM DRAINAGE EASEMENT

PLANT SCHEDULE AREA 'D'

SYMBOL	CODE	BOTANICAL / COMMON NAME
CANOPY TREES		
	ASL	Acer saccharum 'Legacy' Legacy Sugar Maple
	CIP	Carya illinoinensis Pecan
	CBS	Catalpa bignoniodes Southern Catalpa
	GBA	Ginkgo biloba 'Autumn Gold' TM Maidenhair Tree
	LTT	Liriodendron tulipifera Tulip Tree
	NSS	Nyssa sylvatica Sour Gum
	QAW	Quercus alba White Oak
	QNN	Quercus nuttallii Nuttall Oak
	QPW	Quercus phellos Willow Oak
	UAP	Ulmus americana 'Princeton' American Elm
	ZSM	Zelkova serrata 'Myrimar' Myrimar Zelkova
UNDERSTORY TREES		
	CCP	Cercis canadensis 'Forest Pansy' TM Forest Pansy Redbud
EVERGREEN SHRUBS		
	IVND	Ilex vomitoria 'Nana' Dwarf Yaupon
	IPFS	Illicium parviflorum 'Florida Sunshine' Florida Sunshine Anise Tree
	MMWS	Mahonia x media 'Winter Sun' Mahonia hybrid
	OFSO	Osmanthus fragrans Sweet Olive
	VTAR	Viburnum tinus Arrowwood

GRAPHIC SCALE
0 20 40 80
1 inch = 40 ft.

FINAL DRAWING - NOT RELEASED FOR CONSTRUCTION

McADAMS
The John R. McAdams Company, Inc.
2905 Meridian Parkway
Durham, NC 27713

phone 919. 361. 5000
fax 919. 361. 2269
license number: C-0293, C-187

www.mcadamsco.com

CLIENT

ALLIANCE GROUP OF NC, LLC
7208 FALLS OF NEUSE RD, SUITE 101
RALEIGH, NORTH CAROLINA 27615
CONTACT: JACOB ANDERSON
PHONE: 919. 239. 9486

AGNC BROKERAGE | CONSULTING | PLANNING

PEARCE FARM - PHASES 1-3
CONSTRUCTION DRAWINGS - PACKAGE 1
BURLINGTON MILLS ROAD
TOWN OF ROLESVILLE, NORTH CAROLINA

CID-24-08

NORTH CAROLINA LANDSCAPE ARCHITECT SARA RUNGE DONOHEY 2027
PRELIMINARY NOT FOR CONSTRUCTION

REVISIONS

NO.	DATE	
1	02. 03. 2025	REVISED PER TOWN, CITY AND COUNTY COMMENTS

PLAN INFORMATION

PROJECT NO.	AGN23001
FILENAME	AGN23001-LS1
CHECKED BY	JMH
DRAWN BY	SMO
SCALE	1"=40'
DATE	12. 02. 2024

SHEET

LANDSCAPE PLAN AREA "D"

L5.04

X:\Projects\AGN\AGN23001\04-Production\Engineering\Construction Drawings\Current Drawings\AGN23001-LS1.dwg, 1/31/2025 1:06:23 PM, John-Michael Henson

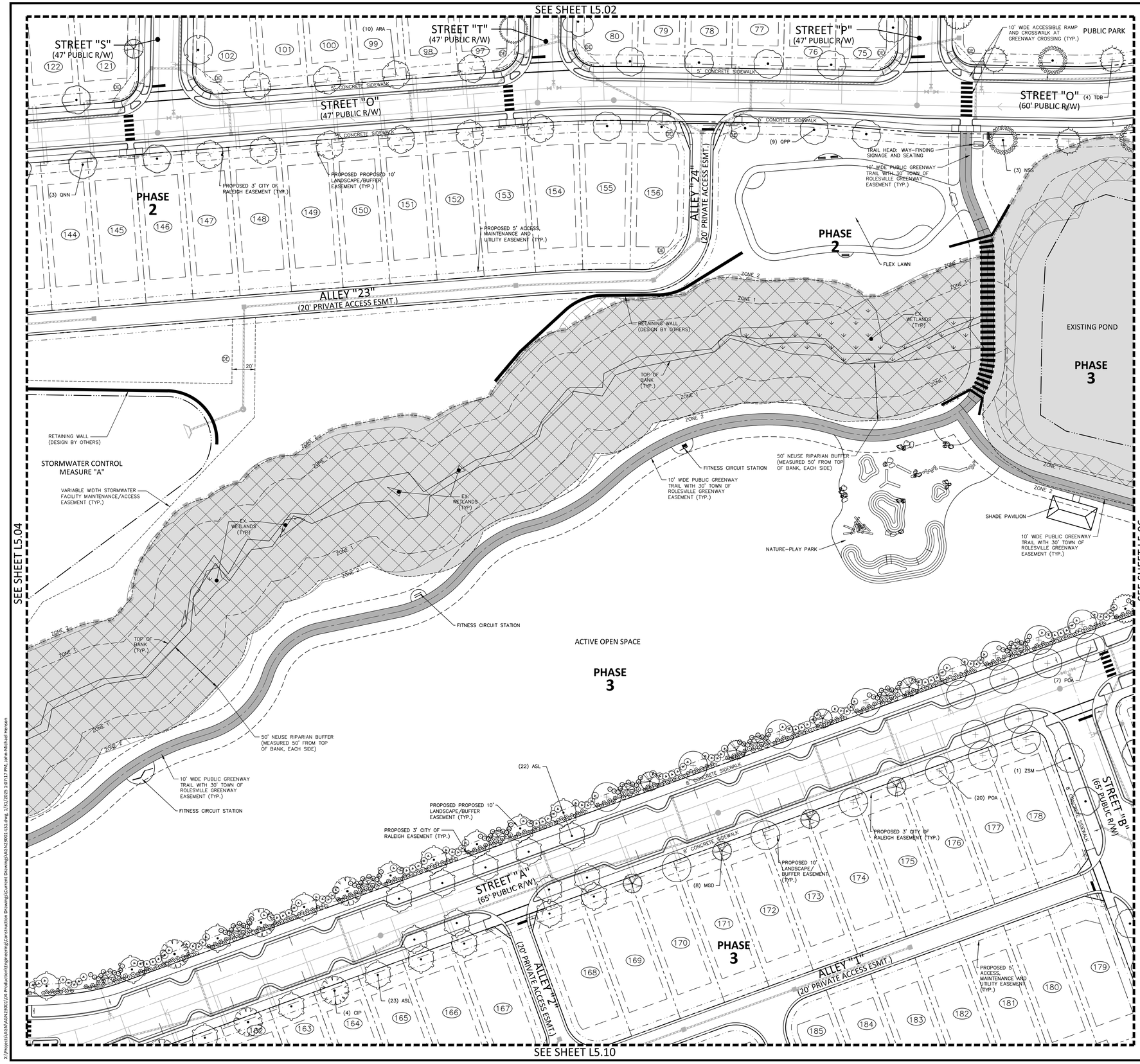

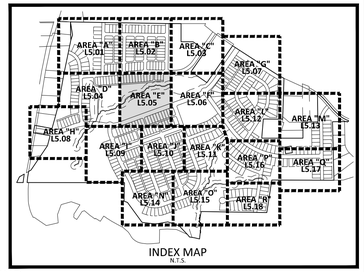

SITE LEGEND

- SIGNAGE
- SITE LIGHTING
- LIGHT POLE
- TRAFFIC DIRECTIONAL ARROW
- ACCESSIBLE PARKING STALL
- VAN ACCESSIBLE PARKING STALL
- (XX) PARKING SPACE COUNT
- ACCESSIBLE RAMPS
- PHASE LINE
- PROPERTY LINE
- RIGHT-OF-WAY LINE
- LOT LINE
- EASEMENT LINE
- CENTERLINE
- 10' LANDSCAPE BUFFER/EASEMENT
- 3' CITY OF RALEIGH EASEMENT
- 5' ACCESS, MAINTENANCE AND UTILITY EASEMENT (ALLEYS)

KEY LEGEND

- PDE PRIVATE STORM DRAINAGE EASEMENT
- PE PUBLIC STORM DRAINAGE EASEMENT

PLANT SCHEDULE AREA 'E'

SYMBOL	CODE	BOTANICAL / COMMON NAME
CANOPY TREES		
	ARA	Acer rubrum 'Autumn Blaze' Autumn Blaze Red Maple
	ASL	Acer saccharum 'Legacy' Legacy Sugar Maple
	CIP	Carya illinoinensis Pecan
	MGD	Magnolia grandiflora 'D.D. Blanchard' TM Southern Magnolia
	NSS	Nyssa sylvatica Sour Gum
	POA	Platanus occidentalis American Sycamore
	QAW	Quercus alba White Oak
	QLO	Quercus lyrata Overcup Oak
	QMB	Quercus marilandica Blackjack Oak
	QNN	Quercus nuttallii Nuttall Oak
	QPP	Quercus palustris Pin Oak
	QVS	Quercus virginiana Southern Live Oak
	TDB	Taxodium distichum Bald Cypress
	ZSM	Zelkova serrata 'Myrimar' Myrimar Zelkova
UNDERSTORY TREES		
	CCP	Cercis canadensis 'Forest Pansy' TM Forest Pansy Redbud
EVERGREEN SHRUBS		
	IVND	Ilex vomitoria 'Nana' Dwarf Youpon
	IPFS	Illicium parviflorum 'Florida Sunshine' Florida Sunshine Anise Tree
	MMWS	Mahonia x media 'Winter Sun' Mahonia hybrid
	OFSO	Osmanthus fragrans Sweet Olive
	VTAR	Viburnum tinus Arrowwood

N

GRAPHIC SCALE
0 20 40 80
1 inch = 40 ft.

FINAL DRAWING - NOT RELEASED FOR CONSTRUCTION

McADAMS
The John R. McAdams Company, Inc.
2905 Meridian Parkway
Durham, NC 27713

phone 919. 361. 5000
fax 919. 361. 2269
license number: C-0293, C-187

www.mcadamsco.com

CLIENT

ALLIANCE GROUP OF NC, LLC
7208 FALLS OF NEUSE RD, SUITE 101
RALEIGH, NORTH CAROLINA 27615
CONTACT: JACOB ANDERSON
PHONE: 919. 239. 9486

AGNC BROKERAGE | CONSULTING | PLANNING

PEARCE FARM - PHASES 1-3
CONSTRUCTION DRAWINGS - PACKAGE 1
BURLINGTON MILLS ROAD
TOWN OF ROLESVILLE, NORTH CAROLINA

CID-24-08

NORTH CAROLINA LANDSCAPE ARCHITECTURE SHIRA RUNGE DONOHOE 2027 NOT FOR CONSTRUCTION

REVISIONS

NO.	DATE	
1	02. 03. 2025	REVISED PER TOWN, CITY AND COUNTY COMMENTS

PLAN INFORMATION

PROJECT NO.	AGN23001
FILENAME	AGN23001-LS1
CHECKED BY	JMH
DRAWN BY	SMO
SCALE	1"=40'
DATE	12. 02. 2024

SHEET

LANDSCAPE PLAN
AREA "E"
L5.05

X:\Projects\AGN\AGN23001\04-Production\Engineering\Construction Drawings\Current Drawings\AGN23001-LS1.dwg, 1/31/2025 1:07:17 PM, John-Michael Henson

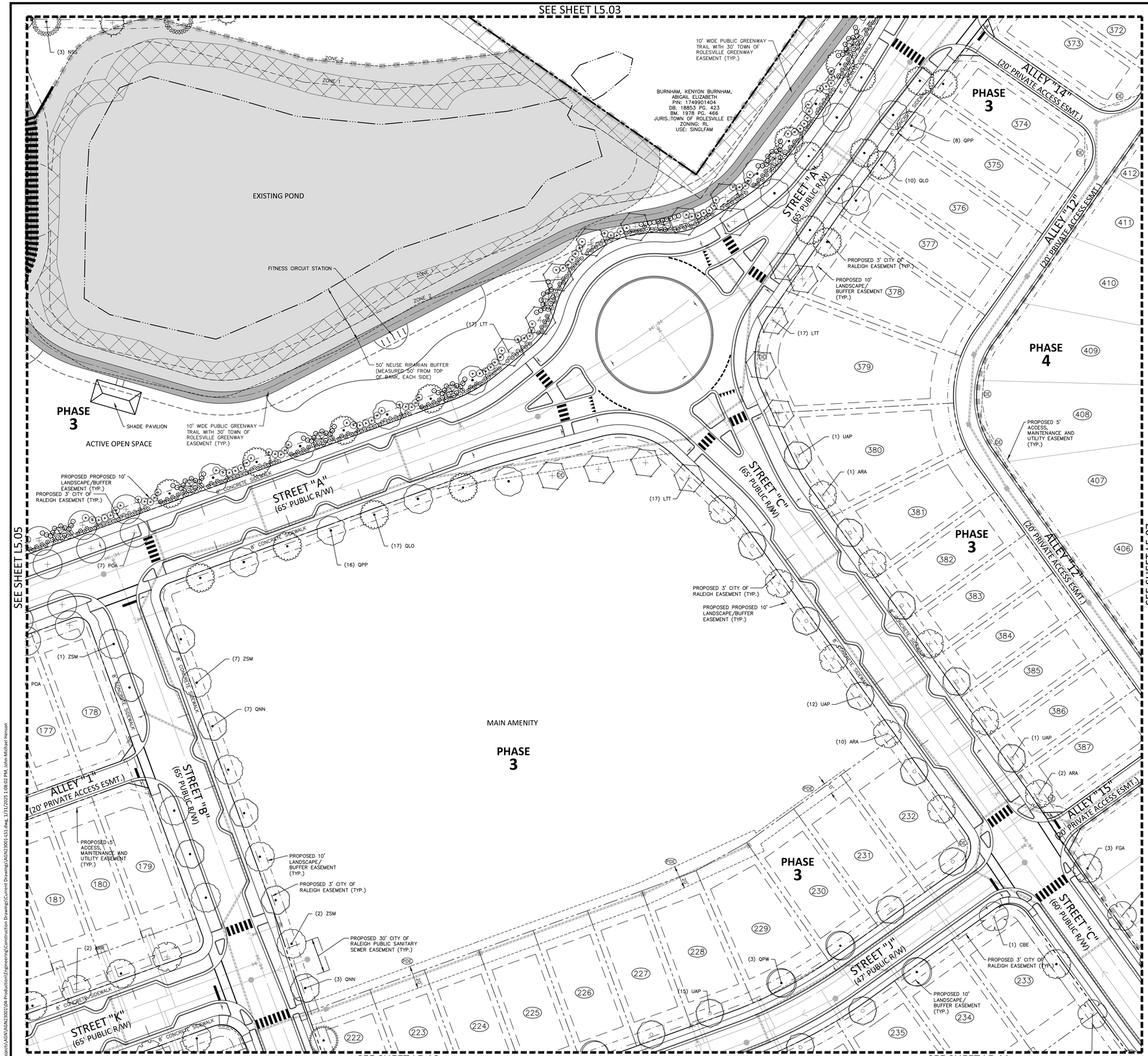

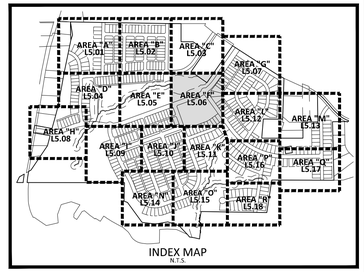

INDEX MAP
N.T.S.

SITE LEGEND

- SIGNAGE
- SITE LIGHTING
- LIGHT POLE
- TRAFFIC DIRECTIONAL ARROW
- ACC — ACCESSIBLE PARKING STALL
- VAN — VAN ACCESSIBLE PARKING STALL
- (XX) — PARKING SPACE COUNT
- ACCESSIBLE RAMPS
- PHASE LINE
- PROPERTY LINE
- RIGHT-OF-WAY LINE
- LOT LINE
- EASEMENT LINE
- CENTERLINE
- 10' LANDSCAPE BUFFER/EASEMENT
- 3' CITY OF RALEIGH EASEMENT
- 5' ACCESS, MAINTENANCE AND UTILITY EASEMENT (ALLEYS)

KEY LEGEND

- (PDE) PRIVATE STORM DRAINAGE EASEMENT
- (DE) PUBLIC STORM DRAINAGE EASEMENT

PLANT SCHEDULE AREA "F"

SYMBOL	CODE	BOTANICAL / COMMON NAME
CANOPY TREES		
	ARA	Acer rubrum 'Autumn Blaze' Autumn Blaze Red Maple
	ARR	Acer rubrum 'Red Sunset' Red Sunset Maple
	CBE	Carpinus betulus European Hornbeam
	FGA	Fagus grandifolia American Beech
	LTT	Liriodendron tulipifera Tulip Tree
	NSS	Nyssa sylvatica Sour Gum
	POA	Platanus occidentalis American Sycamore
	QLO	Quercus lyrata Overcup Oak
	QNN	Quercus nuttallii Nuttall Oak
	QPP	Quercus palustris Pin Oak
	QPW	Quercus phellos Willow Oak
	TDB	Taxodium distichum Bald Cypress
	UAP	Ulmus americana 'Princeton' American Elm
	UPB	Ulmus parvifolia 'Bosque' Bosque Elm
	ZSM	Zelkova serrata 'Myrimar' Myrimar Zelkova
UNDERSTORY TREES		
	CCP	Cercis canadensis 'Forest Pansy' TM Forest Pansy Redbud
EVERGREEN SHRUBS		
	IVND	Ilex vomitoria 'Nana' Dwarf Yaupon
	IPFS	Illicium parviflorum 'Florida Sunshine' Florida Sunshine Anise Tree
	MMWS	Mahonia x media 'Winter Sun' Mahonia hybrid
	OFSO	Osmanthus fragrans Sweet Olive
	VTAR	Viburnum tinus Arrowwood

GRAPHIC SCALE
0 20 40 80
1 inch = 40 ft.

FINAL DRAWING - NOT RELEASED FOR CONSTRUCTION

McADAMS
The John R. McAdams Company, Inc.
2905 Meridian Parkway
Durham, NC 27713

phone 919. 361. 5000
fax 919. 361. 2269
license number: C-0293, C-187

www.mcadamsco.com

CLIENT

ALLIANCE GROUP OF NC, LLC
7208 FALLS OF NEUSE RD, SUITE 101
RALEIGH, NORTH CAROLINA 27615
CONTACT: JACOB ANDERSON
PHONE: 919. 239. 9486

AGNC BROKERAGE | CONSULTING | PLANNING

PEARCE FARM - PHASES 1-3
CONSTRUCTION DRAWINGS - PACKAGE 1

BURLINGTON MILLS ROAD
TOWN OF ROLESVILLE, NORTH CAROLINA

CID-24-08

NORTH CAROLINA LANDSCAPE ARCHITECT SEAL 2027 SHRA RUNGE DONOHOE NOT FOR CONSTRUCTION UNLESS SIGNED AND SEALED

REVISIONS

NO.	DATE	
1	02. 03. 2025	REVISED PER TOWN, CITY AND COUNTY COMMENTS

PLAN INFORMATION

PROJECT NO.	AGN23001
FILENAME	AGN23001-LS1
CHECKED BY	JMH
DRAWN BY	SMO
SCALE	1"=40'
DATE	12. 02. 2024

SHEET

LANDSCAPE PLAN AREA "F"

L5.06

X:\Projects\AGN\AGN23001\04-Production\Engineering\Construction Drawings\Current Drawings\AGN23001-LS1.dwg, 1/31/2025 1:08:02 PM, John-Michael Henson

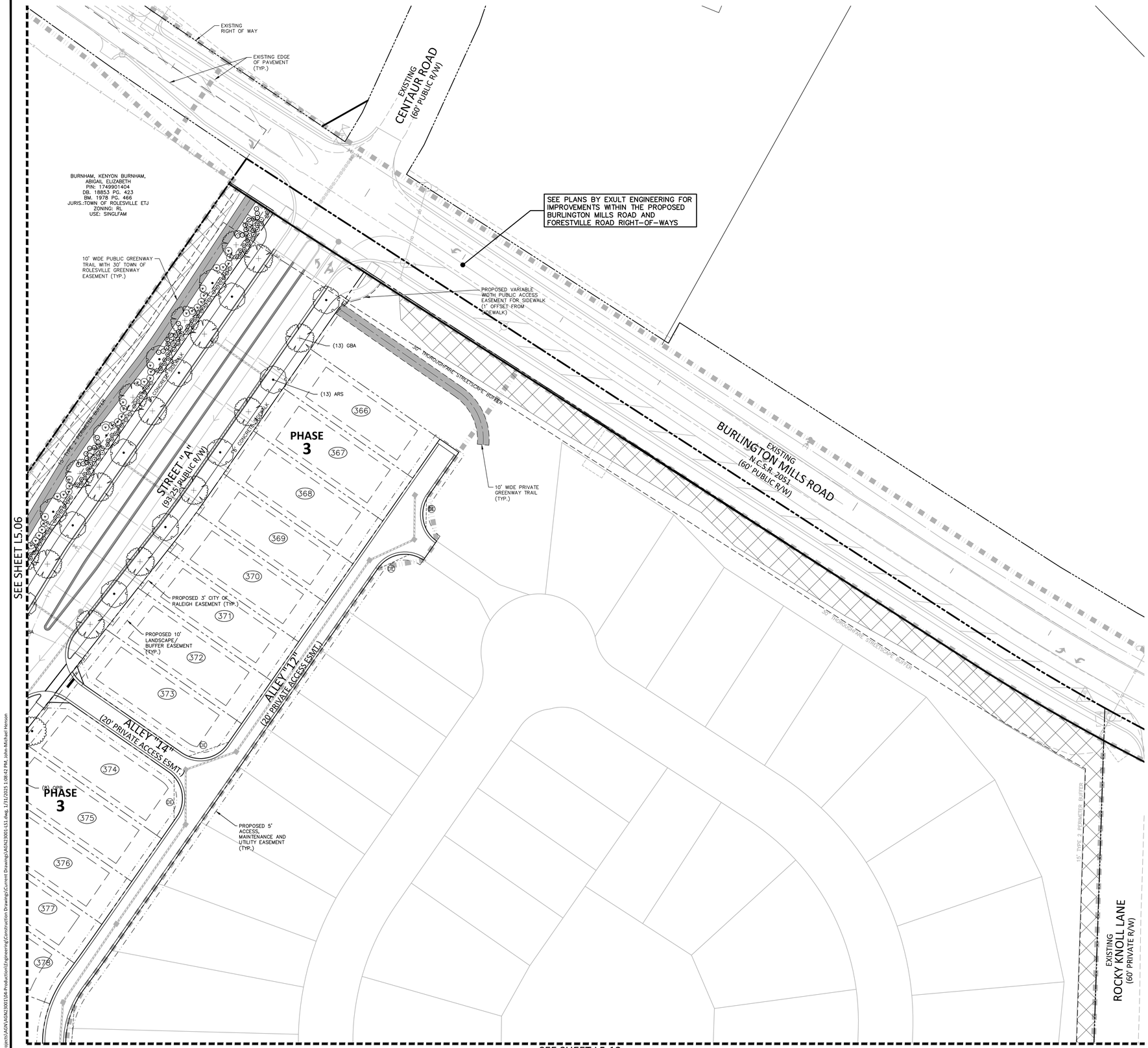

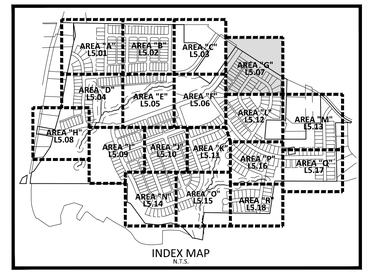

INDEX MAP
N.T.S.

SITE LEGEND

- SIGNAGE
- SITE LIGHTING
- LIGHT POLE
- TRAFFIC DIRECTIONAL ARROW
- ACC — ACCESSIBLE PARKING STALL
- VAN — VAN ACCESSIBLE PARKING STALL
- XX — PARKING SPACE COUNT
- ACCESSIBLE RAMPS
- PHASE LINE
- PROPERTY LINE
- RIGHT-OF-WAY LINE
- LOT LINE
- EASEMENT LINE
- CENTERLINE
- 10' LANDSCAPE BUFFER/EASEMENT
- 3' CITY OF RALEIGH EASEMENT
- 5' ACCESS, MAINTENANCE AND UTILITY EASEMENT (ALLEYS)

KEY LEGEND

- PDE — PRIVATE STORM DRAINAGE EASEMENT
- PE — PUBLIC STORM DRAINAGE EASEMENT

PLANT SCHEDULE AREA 'G'

SYMBOL	CODE	BOTANICAL / COMMON NAME
CANOPY TREES		
	ARS	Acer rubrum 'Summer Red' Summer Red Red Maple
	GBA	Ginkgo biloba 'Autumn Gold' TM Maidenhair Tree
	QLO	Quercus lyrata Overcup Oak
UNDERSTORY TREES		
	CCP	Cercis canadensis 'Forest Pansy' TM Forest Pansy Redbud
EVERGREEN SHRUBS		
	IVND	Ilex vomitoria 'Nana' Dwarf Yaupon
	IPFS	Illicium parviflorum 'Florida Sunshine' Florida Sunshine Anise Tree
	MMWS	Mahonia x media 'Winter Sun' Mahonia hybrid
	OFSO	Osmanthus fragrans Sweet Olive
	VTAR	Viburnum tinus Arrowwood

GRAPHIC SCALE
0 20 40 80
1 inch = 40 ft.

FINAL DRAWING - NOT RELEASED FOR CONSTRUCTION

McADAMS
The John R. McAdams Company, Inc.
2905 Meridian Parkway
Durham, NC 27713

phone 919. 361. 5000
fax 919. 361. 2269
license number: C-0293, C-187

www.mcadamsco.com

CLIENT

ALLIANCE GROUP OF NC, LLC
7208 FALLS OF NEUSE RD, SUITE 101
RALEIGH, NORTH CAROLINA 27615
CONTACT: JACOB ANDERSON
PHONE: 919. 239. 9486

AGNC BROKERAGE | CONSULTING | PLANNING

PEARCE FARM - PHASES 1-3
CONSTRUCTION DRAWINGS - PACKAGE 1

BURLINGTON MILLS ROAD
TOWN OF ROLESVILLE, NORTH CAROLINA

CID-24-08

NORTH CAROLINA REGISTERED LANDSCAPE ARCHITECT SARA RUNGE DONOHOE 2027 NOT FOR CONSTRUCTION

REVISIONS

NO.	DATE	
1	02. 03. 2025	REVISED PER TOWN, CITY AND COUNTY COMMENTS

PLAN INFORMATION

PROJECT NO.	AGN23001
FILENAME	AGN23001-LS1
CHECKED BY	JMH
DRAWN BY	SMO
SCALE	1"=40'
DATE	12. 02. 2024

SHEET

LANDSCAPE PLAN AREA "G"

L5.07

X:\Projects\AGN\AGN23001\04-Production\Engineering\Construction Drawings\Current Drawings\AGN23001-LS1.dwg, 1/31/2025 1:08:42 PM, John-Michael Henson

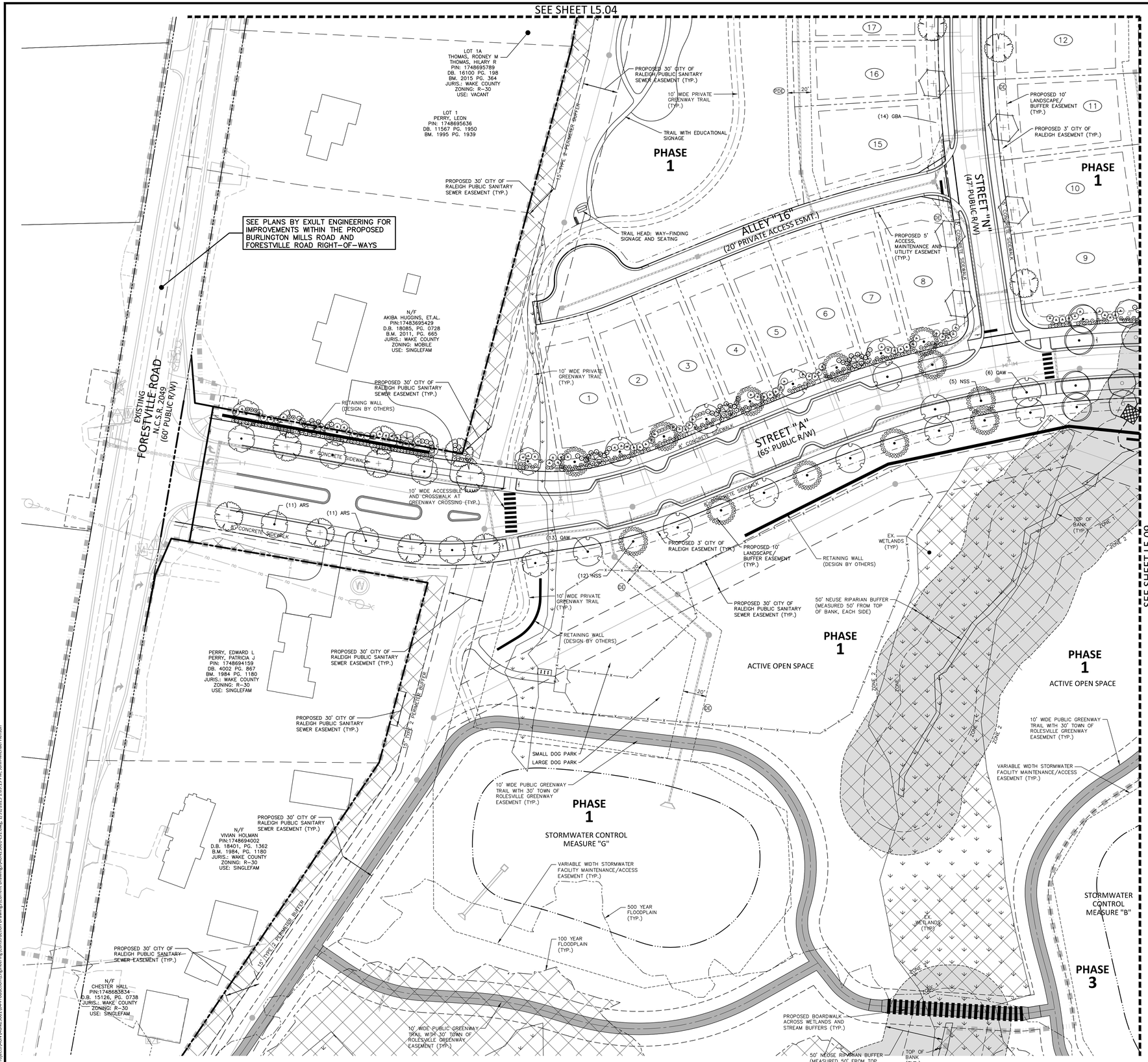

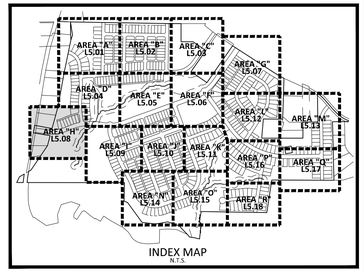

SITE LEGEND

- SIGNAGE
- SITE LIGHTING
- LIGHT POLE
- TRAFFIC DIRECTIONAL ARROW
- ACC — ACCESSIBLE PARKING STALL
- VAN — VAN ACCESSIBLE PARKING STALL
- (XX) — PARKING SPACE COUNT
- ACCESSIBLE RAMPS
- PHASE LINE
- PROPERTY LINE
- RIGHT-OF-WAY LINE
- LOT LINE
- EASEMENT LINE
- CENTERLINE
- 10' LANDSCAPE BUFFER/EASEMENT
- 3' CITY OF RALEIGH EASEMENT
- 5' ACCESS, MAINTENANCE AND UTILITY EASEMENT (ALLEYS)

KEY LEGEND

- (PDE) PRIVATE STORM DRAINAGE EASEMENT
- (PE) PUBLIC STORM DRAINAGE EASEMENT

PLANT SCHEDULE AREA 'H'

SYMBOL	CODE	BOTANICAL / COMMON NAME
CANOPY TREES		
	ARS	Acer rubrum 'Summer Red' Summer Red Red Maple
	GBA	Ginkgo biloba 'Autumn Gold' TM Maidenhair Tree
	LTT	Liriodendron tulipifera Tulip Tree
	NSS	Nyssa sylvatica Sour Gum
	QAW	Quercus alba White Oak
	QPW	Quercus phellos Willow Oak
	UAP	Ulmus americana 'Princeton' American Elm
UNDERSTORY TREES		
	CCP	Cercis canadensis 'Forest Pansy' TM Forest Pansy Redbud
EVERGREEN SHRUBS		
	IVND	Ilex vomitoria 'Nana' Dwarf Yaupon
	IPFS	Illicium parviflorum 'Florida Sunshine' Florida Sunshine Anise Tree
	MMWS	Mahonia x media 'Winter Sun' Mahonia hybrid
	OFSO	Osmanthus fragrans Sweet Olive
	VTAR	Viburnum tinus Arrowwood

GRAPHIC SCALE
0 20 40 80
1 inch = 40 ft.

FINAL DRAWING - NOT RELEASED FOR CONSTRUCTION

McADAMS
The John R. McAdams Company, Inc.
2905 Meridian Parkway
Durham, NC 27713

phone 919. 361. 5000
fax 919. 361. 2269
license number: C-0293, C-187

www.mcadamsco.com

CLIENT

ALLIANCE GROUP OF NC, LLC
7208 FALLS OF NEUSE RD, SUITE 101
RALEIGH, NORTH CAROLINA 27615
CONTACT: JACOB ANDERSON
PHONE: 919. 239. 9486

AGNC BROKERAGE | CONSULTING | PLANNING

PEARCE FARM - PHASES 1-3
CONSTRUCTION DRAWINGS - PACKAGE 1
BURLINGTON MILLS ROAD
TOWN OF ROLESVILLE, NORTH CAROLINA

CID-24-08

NORTH CAROLINA LANDSCAPE ARCHITECT SEAL 2027 SARA RUNGE DONOHEY NOT FOR CONSTRUCTION PRELIMINARY

REVISIONS

NO.	DATE	
1	02. 03. 2025	REVISED PER TOWN, CITY AND COUNTY COMMENTS

PLAN INFORMATION

PROJECT NO.	AGN23001
FILENAME	AGN23001-LS1
CHECKED BY	JMH
DRAWN BY	SMO
SCALE	1"=40'
DATE	12. 02. 2024

SHEET

LANDSCAPE PLAN AREA "H"
L5.08

X:\Projects\AGN\AGN23001\04-Production\Engineering\Construction Drawings\Current Drawings\AGN23001-LS1.dwg, 1/31/2025 1:09:19 PM, John-Michael Henson

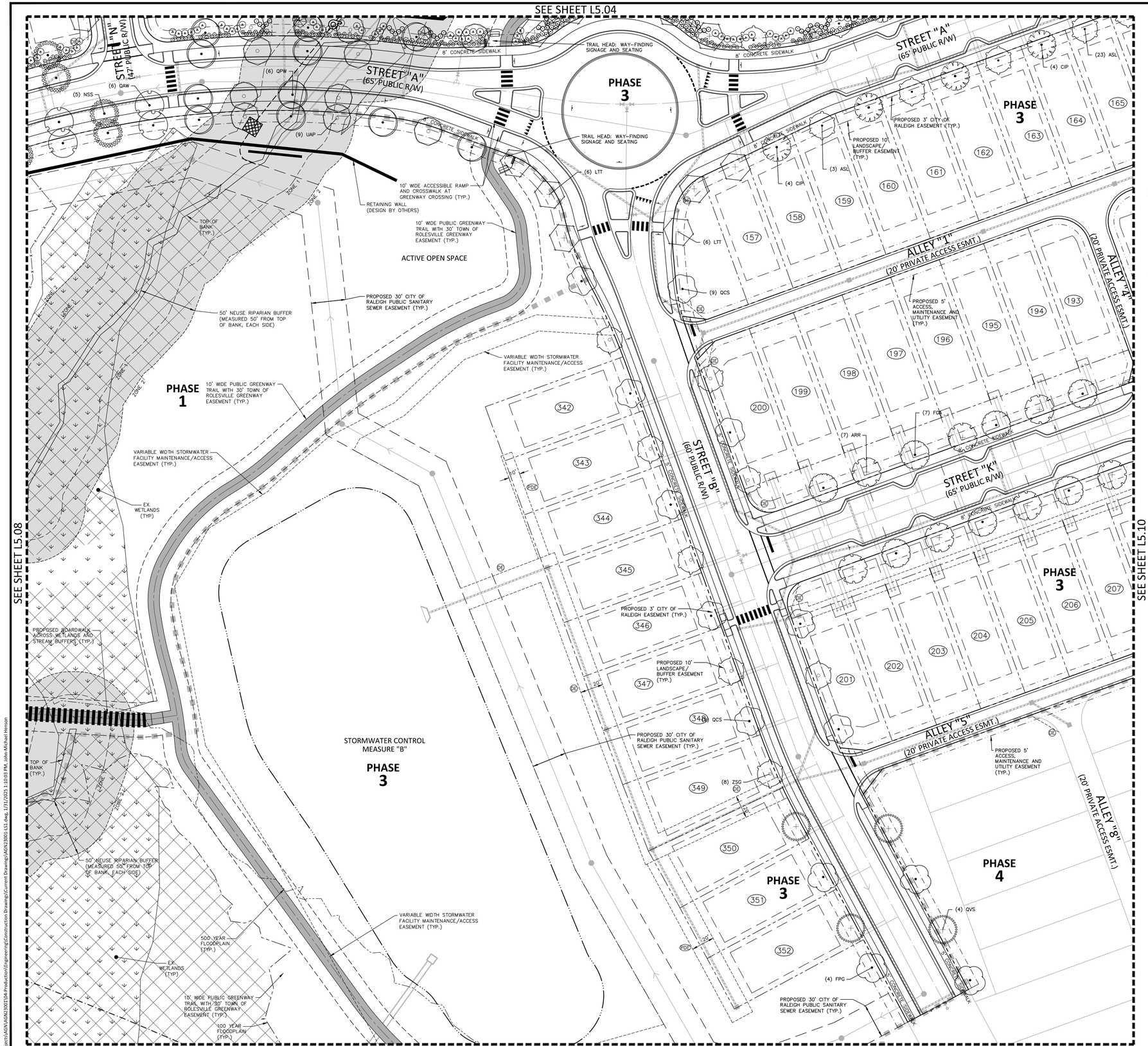

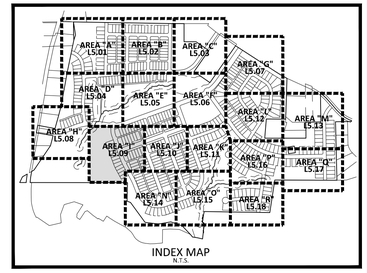

INDEX MAP
N.T.S.

SITE LEGEND

- SIGNAGE
- SITE LIGHTING
- LIGHT POLE
- TRAFFIC DIRECTIONAL ARROW
- ACC — ACCESSIBLE PARKING STALL
- VAN — VAN ACCESSIBLE PARKING STALL
- (XX) — PARKING SPACE COUNT
- ACCESSIBLE RAMPS
- PHASE LINE
- PROPERTY LINE
- RIGHT-OF-WAY LINE
- LOT LINE
- EASEMENT LINE
- CENTERLINE
- 10' LANDSCAPE BUFFER/EASEMENT
- 3' CITY OF RALEIGH EASEMENT
- 5' ACCESS, MAINTENANCE AND UTILITY EASEMENT (ALLEYS)

KEY LEGEND

- PSDE — PRIVATE STORM DRAINAGE EASEMENT
- PDE — PUBLIC STORM DRAINAGE EASEMENT

PLANT SCHEDULE AREA 'I'

SYMBOL	CODE	BOTANICAL / COMMON NAME
CANOPY TREES		
	ARR	Acer rubrum 'Red Sunset' Red Sunset Maple
	ASL	Acer saccharum 'Legacy' Legacy Sugar Maple
	CIP	Carya illinoinensis Pecan
	FGA	Fagus grandifolia American Beech
	FPG	Fraxinus pennsylvanica Green Ash
	LTT	Liriodendron tulipifera Tulip Tree
	NSS	Nyssa sylvatica Sour Gum
	QAW	Quercus alba White Oak
	QCS	Quercus coccinea Scarlet Oak
	QPW	Quercus phellos Willow Oak
	QVS	Quercus virginiana Southern Live Oak
	UAP	Ulmus americana 'Princeton' American Elm
	ZSG	Zelkova serrata 'Green Vase' Sawleaf Zelkova
UNDERSTORY TREES		
	CCP	Cercis canadensis 'Forest Pansy' TM Forest Pansy Redbud
EVERGREEN SHRUBS		
	IVND	Ilex vomitoria 'Nana' Dwarf Yaupon
	IPFS	Illicium parviflorum 'Florida Sunshine' Florida Sunshine Anise Tree
	MMWS	Mahonia x media 'Winter Sun' Mahonia hybrid
	OFSO	Osmanthus fragrans Sweet Olive
	VTAR	Viburnum tinus Arrowwood

GRAPHIC SCALE
0 20 40 80
1 inch = 40 ft.

FINAL DRAWING - NOT RELEASED FOR CONSTRUCTION

McADAMS
The John R. McAdams Company, Inc.
2905 Meridian Parkway
Durham, NC 27713

phone 919. 361. 5000
fax 919. 361. 2269
license number: C-0293, C-187

www.mcadamsco.com

CLIENT

ALLIANCE GROUP OF NC, LLC
7208 FALLS OF NEUSE RD, SUITE 101
RALEIGH, NORTH CAROLINA 27615
CONTACT: JACOB ANDERSON
PHONE: 919. 239. 9486

AGNC BROKERAGE | CONSULTING | PLANNING

PEARCE FARM - PHASES 1-3
CONSTRUCTION DRAWINGS - PACKAGE 1
BURLINGTON MILLS ROAD
TOWN OF ROLESVILLE, NORTH CAROLINA

CID-24-08

NORTH CAROLINA REGISTERED LANDSCAPE ARCHITECT SARA RUNGE DONOHUE 2027 — NOT FOR CONSTRUCTION

REVISIONS

NO.	DATE	
1	02. 03. 2025	REVISED PER TOWN, CITY AND COUNTY COMMENTS

PLAN INFORMATION

PROJECT NO.	AGN23001
FILENAME	AGN23001-LS1
CHECKED BY	JMH
DRAWN BY	SMO
SCALE	1"=40'
DATE	12. 02. 2024

SHEET

LANDSCAPE PLAN AREA "I"

L5.09

X:\Projects\AGN\AGN23001\04-Production\Engineering\Construction Drawings\Current Drawings\AGN23001-LS1.dwg, 1/31/2025 1:10:03 PM, John-Michael Henson

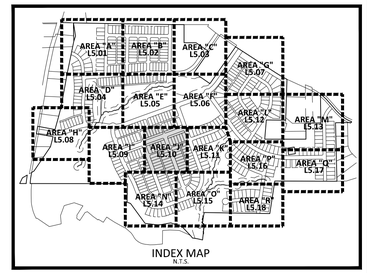

INDEX MAP
N.T.S.

SITE LEGEND

- SIGNAGE
- SITE LIGHTING
- LIGHT POLE
- TRAFFIC DIRECTIONAL ARROW
- ACC — ACCESSIBLE PARKING STALL
- VAN — VAN ACCESSIBLE PARKING STALL
- XX — PARKING SPACE COUNT
- ACCESSIBLE RAMPS
- PHASE LINE
- PROPERTY LINE
- RIGHT-OF-WAY LINE
- LOT LINE
- EASEMENT LINE
- CENTERLINE
- 10' LANDSCAPE BUFFER/EASEMENT
- 3' CITY OF RALEIGH EASEMENT
- 5' ACCESS, MAINTENANCE AND UTILITY EASEMENT (ALLEYS)

KEY LEGEND

- PDE — PRIVATE STORM DRAINAGE EASEMENT
- PE — PUBLIC STORM DRAINAGE EASEMENT

PLANT SCHEDULE AREA 'J'

SYMBOL	CODE	BOTANICAL / COMMON NAME
CANOPY TREES		
	ARR	Acer rubrum 'Red Sunset' Red Sunset Maple
	ASL	Acer saccharum 'Legacy' Legacy Sugar Maple
	CIP	Carya illinoinensis Pecan
	CBS	Catalpa bignoniodes Southern Catalpa
	FGA	Fagus grandifolia American Beech
	NSS	Nyssa sylvatica Sour Gum
	QAW	Quercus alba White Oak
	QNN	Quercus nuttallii Nuttall Oak
	QPW	Quercus phellos Willow Oak
	UAP	Ulmus americana 'Princeton' American Elm
	UPB	Ulmus parvifolia 'Bosque' Bosque Elm
	ZSM	Zelkova serrata 'Myrimar' Myrimar Zelkova

GRAPHIC SCALE
0 20 40 80
1 inch = 40 ft.

FINAL DRAWING - NOT RELEASED FOR CONSTRUCTION

McADAMS
The John R. McAdams Company, Inc.
2905 Meridian Parkway
Durham, NC 27713

phone 919. 361. 5000
fax 919. 361. 2269
license number: C-0293, C-187

www.mcadamsco.com

CLIENT

ALLIANCE GROUP OF NC, LLC
7208 FALLS OF NEUSE RD, SUITE 101
RALEIGH, NORTH CAROLINA 27615
CONTACT: JACOB ANDERSON
PHONE: 919. 239. 9486

AGNC BROKERAGE | CONSULTING | PLANNING

PEARCE FARM - PHASES 1-3
CONSTRUCTION DRAWINGS - PACKAGE 1

BURLINGTON MILLS ROAD
TOWN OF ROLESVILLE, NORTH CAROLINA

CID-24-08

NORTH CAROLINA PROFESSIONAL ENGINEER SARA RUNGE DONOHOE 2027
PRELIMINARY NOT FOR CONSTRUCTION

REVISIONS

NO.	DATE	
1	02. 03. 2025	REVISED PER TOWN, CITY AND COUNTY COMMENTS

PLAN INFORMATION

PROJECT NO.	AGN23001
FILENAME	AGN23001-LS1
CHECKED BY	JMH
DRAWN BY	SMO
SCALE	1"=40'
DATE	12. 02. 2024

SHEET

LANDSCAPE PLAN AREA "J"

L5.10

X:\Projects\AGN\AGN23001\04-Production\Engineering\Construction Drawings\Current Drawings\AGN23001-LS1.dwg, 1/31/2025 1:10:33 PM, John-Michael Henson

SEE SHEET L5.06

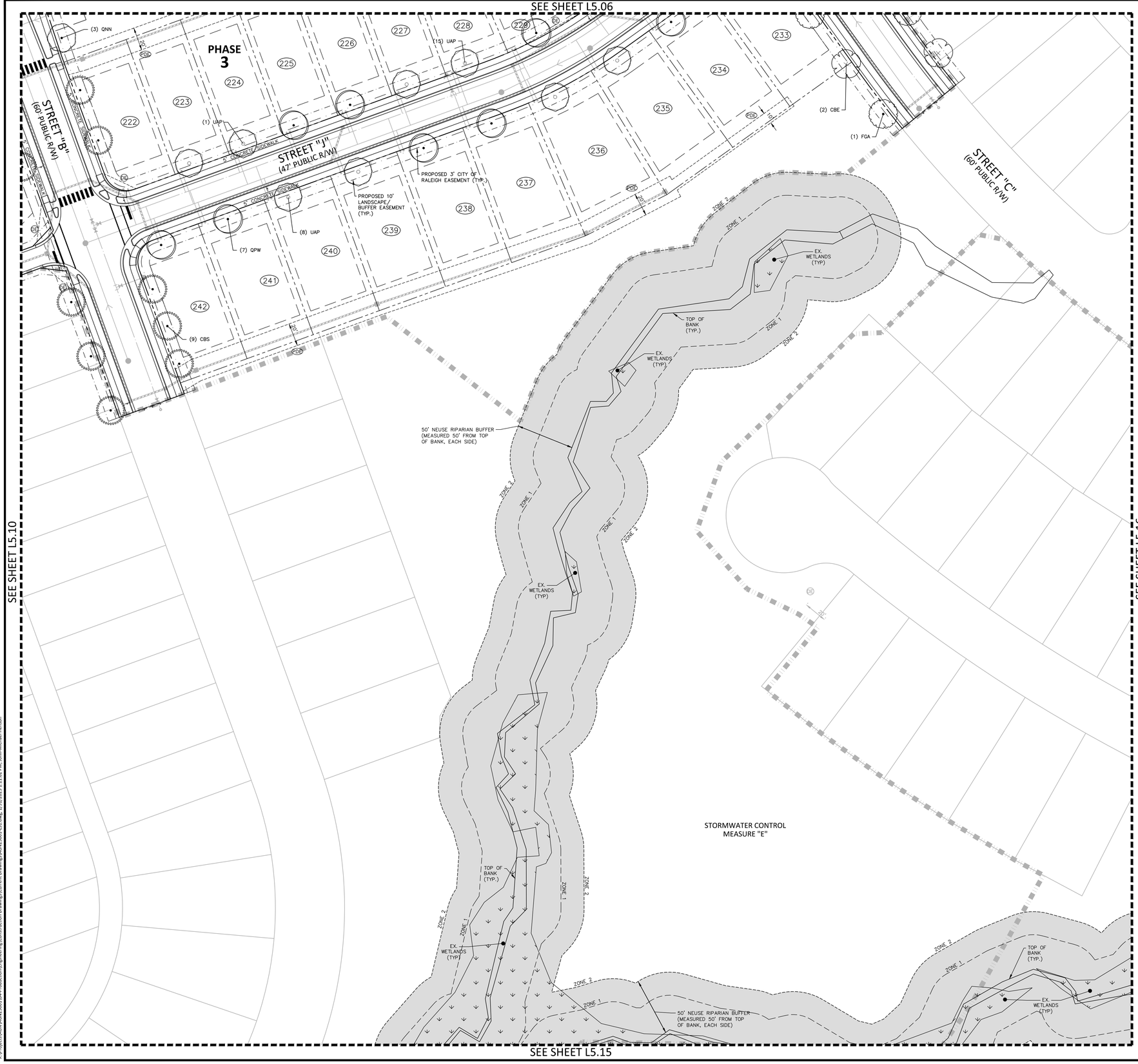

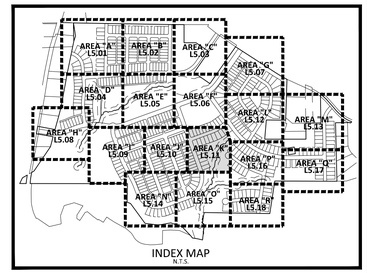

INDEX MAP
N.T.S.

SITE LEGEND

	SIGNAGE
	SITE LIGHTING
	LIGHT POLE
	TRAFFIC DIRECTIONAL ARROW
ACC	ACCESSIBLE PARKING STALL
VAN	VAN ACCESSIBLE PARKING STALL
XX	PARKING SPACE COUNT
	ACCESSIBLE RAMPS
	PHASE LINE
	PROPERTY LINE
	RIGHT-OF-WAY LINE
	LOT LINE
	EASEMENT LINE
	CENTERLINE
	10' LANDSCAPE BUFFER/EASEMENT
	3' CITY OF RALEIGH EASEMENT
	5' ACCESS, MAINTENANCE AND UTILITY EASEMENT (ALLEYS)

KEY LEGEND

PDE PRIVATE STORM DRAINAGE EASEMENT
DE PUBLIC STORM DRAINAGE EASEMENT

PLANT SCHEDULE AREA 'K'

SYMBOL	CODE	BOTANICAL / COMMON NAME
CANOPY TREES		
	CBE	Carpinus betulus European Hornbeam
	CBS	Catalpa bignoniodes Southern Catalpa
	FGA	Fagus grandifolia American Beech
	QNN	Quercus nuttallii Nuttall Oak
	QPW	Quercus phellos Willow Oak
	UAP	Ulmus americana 'Princeton' American Elm
	UPB	Ulmus parvifolia 'Bosque' Bosque Elm

GRAPHIC SCALE
0 20 40 80
1 inch = 40 ft.

FINAL DRAWING - NOT RELEASED FOR CONSTRUCTION

MCADAMS
The John R. McAdams Company, Inc.
2905 Meridian Parkway
Durham, NC 27713

phone 919. 361. 5000
fax 919. 361. 2269
license number: C-0293, C-187

www.mcadamsco.com

CLIENT

ALLIANCE GROUP OF NC, LLC
7208 FALLS OF NEUSE RD, SUITE 101
RALEIGH, NORTH CAROLINA 27615
CONTACT: JACOB ANDERSON
PHONE: 919. 239. 9486

AGNC BROKERAGE | CONSULTING | PLANNING

PEARCE FARM - PHASES 1-3
CONSTRUCTION DRAWINGS - PACKAGE 1
BURLINGTON MILLS ROAD
TOWN OF ROLESVILLE, NORTH CAROLINA

CID-24-08

NORTH CAROLINA REGISTERED LANDSCAPE ARCHITECT SARA RUNGE DONOHUE 2027
PRELIMINARY NOT FOR CONSTRUCTION

REVISIONS

NO.	DATE	
1	02. 03. 2025	REVISED PER TOWN, CITY AND COUNTY COMMENTS

PLAN INFORMATION

PROJECT NO.	AGN23001
FILENAME	AGN23001-LS1
CHECKED BY	JMH
DRAWN BY	SMO
SCALE	1"=40'
DATE	12. 02. 2024

SHEET

LANDSCAPE PLAN AREA "K"
L5.11

X:\Projects\AGN\AGN23001\04-Production\Engineering\Construction Drawings\Current Drawings\AGN23001-LS1.dwg, 1/31/2025 11:11:02 PM, John-Michael Henson

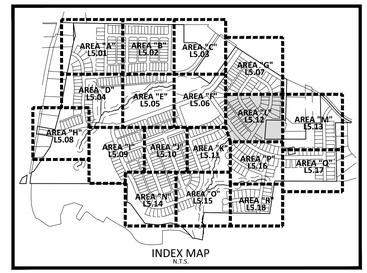

INDEX MAP
N.T.S.

SITE LEGEND

- SIGNAGE
- SITE LIGHTING
- LIGHT POLE
- TRAFFIC DIRECTIONAL ARROW
- ACC — ACCESSIBLE PARKING STALL
- VAN — VAN ACCESSIBLE PARKING STALL
- XX — PARKING SPACE COUNT
- ACCESSIBLE RAMPS
- PHASE LINE
- PROPERTY LINE
- RIGHT-OF-WAY LINE
- LOT LINE
- EASEMENT LINE
- CENTERLINE
- 10' LANDSCAPE BUFFER/EASEMENT
- 3' CITY OF RALEIGH EASEMENT
- 5' ACCESS, MAINTENANCE AND UTILITY EASEMENT (ALLEYS)

KEY LEGEND

- PDE — PRIVATE STORM DRAINAGE EASEMENT
- DE — PUBLIC STORM DRAINAGE EASEMENT

PLANT SCHEDULE AREA 'L'

SYMBOL	CODE	BOTANICAL / COMMON NAME
CANOPY TREES		
	ARA	Acer rubrum 'Autumn Blaze' Autumn Blaze Red Maple
	CBE	Carpinus betulus European Hornbeam
	FGA	Fagus grandifolia American Beech
	UAP	Ulmus americana 'Princeton' American Elm

GRAPHIC SCALE
0 20 40 80
1 inch = 40 ft.

FINAL DRAWING - NOT RELEASED FOR CONSTRUCTION

McADAMS
The John R. McAdams Company, Inc.
2905 Meridian Parkway
Durham, NC 27713

phone 919. 361. 5000
fax 919. 361. 2269
license number: C-0293, C-187

www.mcadamsco.com

CLIENT

ALLIANCE GROUP OF NC, LLC
7208 FALLS OF NEUSE RD, SUITE 101
RALEIGH, NORTH CAROLINA 27615
CONTACT: JACOB ANDERSON
PHONE: 919. 239. 9486

AGNC
BROKERAGE | CONSULTING | PLANNING

PEARCE FARM - PHASES 1-3
CONSTRUCTION DRAWINGS - PACKAGE 1
BURLINGTON MILLS ROAD
TOWN OF ROLESVILLE, NORTH CAROLINA

CID-24-08

NORTH CAROLINA
REGISTERED LANDSCAPE ARCHITECT
2027
SARA RUNGE DONOHOE
PRELIMINARY
NOT FOR CONSTRUCTION

REVISIONS

NO.	DATE	
1	02. 03. 2025	REVISED PER TOWN, CITY AND COUNTY COMMENTS

PLAN INFORMATION

PROJECT NO.	AGN23001
FILENAME	AGN23001-LS1
CHECKED BY	JMH
DRAWN BY	SMO
SCALE	1"=40'
DATE	12. 02. 2024

SHEET

LANDSCAPE PLAN
AREA "L"
L5.12

X:\Projects\AGN\AGN23001\04-Production\Engineering\Construction Drawings\Current Drawings\AGN23001-LS1.dwg, 1/31/2025 1:11:35 PM, John-Michael Henson

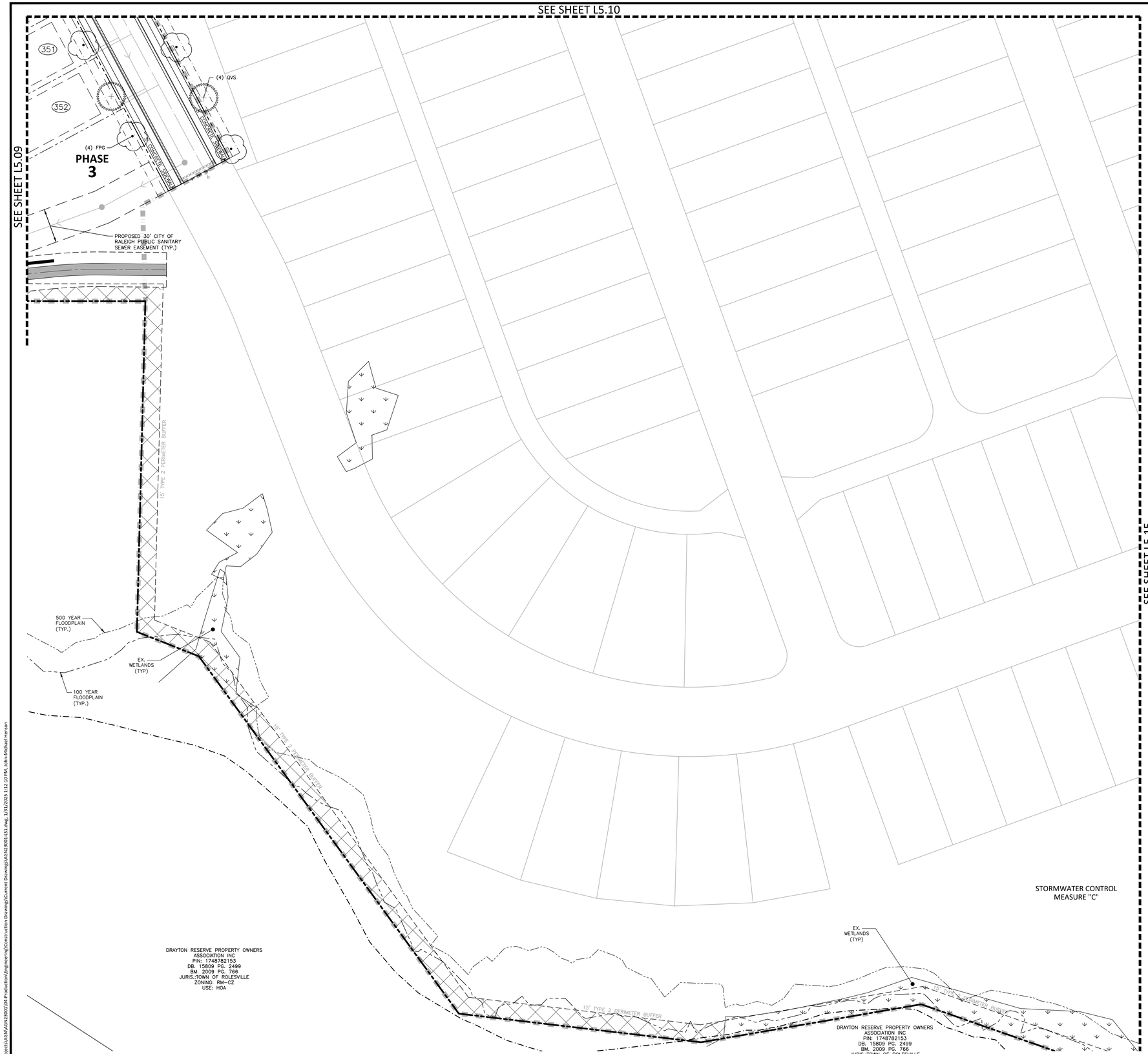

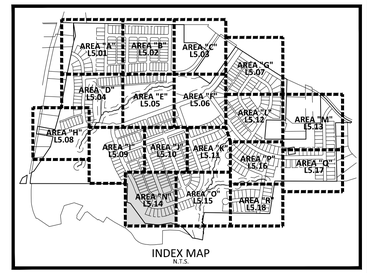

INDEX MAP
N.T.S.

SITE LEGEND

- SIGNAGE
- SITE LIGHTING
- LIGHT POLE
- TRAFFIC DIRECTIONAL ARROW
- ACC — ACCESSIBLE PARKING STALL
- VAN — VAN ACCESSIBLE PARKING STALL
- XX — PARKING SPACE COUNT
- ACCESSIBLE RAMPS
- PHASE LINE
- PROPERTY LINE
- RIGHT-OF-WAY LINE
- LOT LINE
- EASEMENT LINE
- CENTERLINE
- 10' LANDSCAPE BUFFER/EASEMENT
- 3' CITY OF RALEIGH EASEMENT
- 5' ACCESS, MAINTENANCE AND UTILITY EASEMENT (ALLEYS)

KEY LEGEND

- PDE — PRIVATE STORM DRAINAGE EASEMENT
- DE — PUBLIC STORM DRAINAGE EASEMENT

PLANT SCHEDULE AREA 'M'

SYMBOL	CODE	BOTANICAL / COMMON NAME
CANOPY TREES		
	FPG	Fraxinus pennsylvanica Green Ash
	QVS	Quercus virginiana Southern Live Oak

GRAPHIC SCALE
0 20 40 80
1 inch = 40 ft.

FINAL DRAWING - NOT RELEASED FOR CONSTRUCTION

McADAMS
The John R. McAdams Company, Inc.
2905 Meridian Parkway
Durham, NC 27713

phone 919. 361. 5000
fax 919. 361. 2269
license number: C-0293, C-187

www.mcadamsco.com

CLIENT

ALLIANCE GROUP OF NC, LLC
7208 FALLS OF NEUSE RD, SUITE 101
RALEIGH, NORTH CAROLINA 27615
CONTACT: JACOB ANDERSON
PHONE: 919. 239. 9486

AGNC
BROKERAGE | CONSULTING | PLANNING

PEARCE FARM - PHASES 1-3
CONSTRUCTION DRAWINGS - PACKAGE 1
BURLINGTON MILLS ROAD
TOWN OF ROLESVILLE, NORTH CAROLINA

CID-24-08

NORTH CAROLINA REGISTERED LANDSCAPE ARCHITECT 2027 SARA RUNGE DONOHOE
NOT FOR CONSTRUCTION

REVISIONS

NO.	DATE	
1	02. 03. 2025	REVISED PER TOWN, CITY AND COUNTY COMMENTS

PLAN INFORMATION

PROJECT NO.	AGN23001
FILENAME	AGN23001-LS1
CHECKED BY	JMH
DRAWN BY	SMO
SCALE	1"=40'
DATE	12. 02. 2024

SHEET

LANDSCAPE PLAN AREA "N"

L5.14

X:\Projects\AGN\AGN23001\04-Production\Engineering\Construction Drawings\Current Drawings\AGN23001-LS1.dwg, 1/31/2025 1:12:10 PM, John-Michael Henson

GENERAL LANDSCAPE NOTES:

1. ALL MATERIALS AND METHODS OF CONSTRUCTION SHALL BE IN ACCORDANCE WITH THE TOWN OF ROLESVILLE AND THE STATE OF NORTH CAROLINA STANDARDS AND SPECIFICATIONS.
2. CONTRACTOR IS RESPONSIBLE FOR THE SITE INSPECTION BEFORE LANDSCAPE CONSTRUCTION AND INSTALLATION IN ORDER TO BECOME FAMILIAR WITH THE EXISTING CONDITIONS.
3. LANDSCAPE CONTRACTOR IS RESPONSIBLE FOR LOCATING ALL UNDERGROUND UTILITIES BEFORE BEGINNING DEMOLITION OR INSTALLATION.
4. CONTRACTOR SHALL NOTIFY LANDSCAPE ARCHITECT OF ANY DISCREPANCIES BETWEEN THE NOTES, SPECIFICATIONS, DRAWINGS OR SITE CONDITIONS FOR RESOLUTION PRIOR TO INSTALLATION.
5. ANY DAMAGE TO UTILITIES SHALL BE REPAIRED AT THE CONTRACTOR'S EXPENSE.
6. THIS PLAN IS FOR PLANTING PURPOSES ONLY. FOR INFORMATION REGARDING BUILDINGS, GRADING, WALLS, ETC., REFER TO ARCHITECTURE, SITE AND GRADING PLANS.
7. VERIFICATION OF TOTAL PLANT QUANTITIES AS SHOWN IN THE PLANT SCHEDULE SHALL BE THE RESPONSIBILITY OF THE LANDSCAPE CONTRACTOR. ANY DISCREPANCIES SHALL BE BROUGHT TO THE ATTENTION OF THE LANDSCAPE ARCHITECT.
8. CONTRACTOR TO ENSURE PROPER STABILIZATION AND SEEDING OF THE SITE IN ACCORDANCE WITH APPLICABLE REGULATIONS.
9. LANDSCAPE MATERIAL SHALL BE WELL FORMED, VIGOROUS, GROWING SPECIMENS WITH GROWTH TYPICAL OF VARIETIES SPECIFIED AND SHALL BE FREE FROM DAMAGE, INSECTS AND DISEASES. MATERIAL SHALL EQUAL OR SURPASS #1 QUALITY AS DEFINED IN THE CURRENT ISSUE OF "AMERICAN STANDARD FOR NURSERY STOCK" AS PUBLISHED BY THE AMERICAN NURSERY & LANDSCAPE ASSOCIATION.
10. ALL PLANT MATERIAL IS TO BE CAREFULLY HANDLED BY THE ROOT BALL, NOT THE TRUNK, BRANCHES AND/OR FOLIAGE OF THE PLANT. MISHANDLED PLANT MATERIAL MAY BE REJECTED BY THE OWNER OR LANDSCAPE ARCHITECT.
11. ALL PLANT MATERIAL IS TO BE WELL ROOTED, NOT ROOT BOUND, SUCH THAT THE ROOT BALL REMAINS INTACT THROUGHOUT THE PLANTING PROCESS. DEFICIENT PLANT MATERIAL MAY BE REJECTED BY THE LANDSCAPE ARCHITECT OR OWNER.
12. ALL PLANTS TO BE A MINIMUM OF WHAT IS SPECIFIED IN THE PLANT SCHEDULE. ANY CHANGES OR SUBSTITUTIONS SHALL BE APPROVED BY THE LANDSCAPE ARCHITECT AND GOVERNING JURISDICTION PRIOR TO ANY HOLE BEING DUG.
13. CONTRACTOR TO COORDINATE WITH OWNER'S REPRESENTATIVE AND LANDSCAPE ARCHITECT TO ESTABLISH THE EXTENTS OF MULCH/SEED/SOD IF NOT SPECIFICALLY SHOWN ON PLANS.
14. CONTRACTOR SHALL PROVIDE POSITIVE DRAINAGE IN ALL PLANTING AREAS.
15. PROPOSED TREES TO BE PLANTED A MINIMUM 10 FEET FROM ANY LIGHT POLE AS MEASURED FROM TRUNK OF THE TREE TO THE POLE.
16. PROPOSED TREES TO BE PLANTED A MINIMUM 10 FEET FROM ANY FIRE HYDRANT AS MEASURED FROM TRUNK OF THE TREE TO THE HYDRANT.
17. CONTRACTOR SHALL COMPLETE SOIL TEST IN ALL PLANTING AREAS TO DETERMINE SOIL AMENDMENT REQUIREMENTS UNLESS WAIVED BY OWNER'S REPRESENTATIVE. CONTRACTOR SHALL ADJUST PH AND FERTILITY BASED UPON THE SOIL TEST RESULTS.
18. TOPSOIL SHALL BE FREE OF MATERIAL LARGER THAN 1.0 INCH IN DIAMETER OR LENGTH AND SHALL NOT CONTAIN SLAG, CINDERS, STONES, LUMPS OF SOIL, STICKS, ROOTS, TRASH, OR OTHER EXTRANEOUS MATERIAL.
19. LOOSEN SUBGRADE / SURFACE SOIL TO A MINIMUM DEPTH OF 6 INCHES. APPLY SOIL AMENDMENTS AND FERTILIZERS AS REQUIRED BY THE SOIL TEST RESULTS TO ACHIEVE A HEALTHY GROWING MEDIA AND MIX THOROUGHLY INTO TOP 4 INCHES OF SOIL. SPREAD PLANTING SOIL MIX TO A DEPTH OF 6 INCHES BUT NOT LESS THAN REQUIRED TO MEET FINISH GRADES AFTER NATURAL SETTLEMENT. DO NOT SPREAD IF PLANTING SOIL OR SUBGRADE IS FROZEN, MUDDY, OR EXCESSIVELY WET.
20. IF IMPORTED TOPSOIL IS REQUIRED, THE SUBGRADE SHALL BE SCARIFIED OR TILLED TO A DEPTH OF AT LEAST 6 INCHES PRIOR TO INSTALLATION OF IMPORTED TOPSOIL. FOLLOWING INSTALLATION OF IMPORTED TOPSOIL, THE TOPSOIL SHALL BE TILLED TO INTEGRATE THE SOIL PROFILES.
21. PLANT MATERIALS ARE TO BE GUARANTEED FOR A PERIOD OF 12 MONTHS. PLANT MATERIALS WHICH REMAIN UNHEALTHY WILL BE REPLACED BY THE LANDSCAPE CONTRACTOR BEFORE THE EXPIRATION OF THE GUARANTEE PERIOD OR IMMEDIATELY IF SO DIRECTED BY THE OWNER'S REPRESENTATIVE OR LANDSCAPE ARCHITECT.
22. ALL TREE PLANTINGS SHALL BE MULCHED TO A DEPTH OF 3 INCHES, AND WITH A MINIMUM 3 FOOT RADIUS FROM BASE OF TREE OR TO DRIPLINE. MULCH SHALL BE FREE OF TRASH AND MAINTAINED WEED FREE. MULCH SHALL NOT COVER THE ROOT FLARE. CONFIRM MULCH SPECIFICATIONS WITH OWNER'S REPRESENTATIVE OR LANDSCAPE ARCHITECT.
23. DO NOT PRUNE TREES AND SHRUBS BEFORE DELIVERY. PROTECT BARK, BRANCHES, AND ROOT SYSTEMS FROM SUN SCALD, DRYING, SWEATING, WHIPPING, AND OTHER HANDLING AND TYING DAMAGE. DO NOT BEND OR BIND-TIE TREES OR SHRUBS IN SUCH A MANNER AS TO DESTROY THEIR NATURAL SHAPE. PROVIDE PROTECTIVE COVERING OF EXTERIOR PLANTS DURING DELIVERY. DO NOT DROP EXTERIOR PLANTS DURING DELIVERY AND HANDLING.
24. DELIVER EXTERIOR PLANTS AFTER PREPARATIONS FOR PLANTING HAVE BEEN COMPLETED AND INSTALL IMMEDIATELY. IMMEDIATELY AFTER UNLOADING, STAND THE TREES UP TO REDUCE THE RISK OF SUN SCALD. PROPERLY STAGED TREES ARE STANDING, UNTIED AND SPACED. UNLESS IMMEDIATELY INSTALLED, SET EXTERIOR PLANTS AND TREES IN SHADE, PROTECT FROM WEATHER AND MECHANICAL DAMAGE, AND KEEP ROOTS MOIST.
25. CONTRACTOR SHALL REMOVE DEBRIS AND FINE GRADE ALL PLANTING AREAS PRIOR TO INSTALLATION.
26. REMOVE GUY WIRES AND STAKES AT END OF WARRANTY PERIOD OR ESTABLISHMENT.
27. FINISH GRADING: GRADE PLANTING AREAS TO A SMOOTH, UNIFORM SURFACE PLANE WITH LOOSE, UNIFORMLY FINE TEXTURE. GRADE TO WITHIN PLUS OR MINUS 1/2 INCH OF FINISH ELEVATION. ROLL AND RAKE, REMOVE RIDGES, AND FILL DEPRESSIONS TO MEET FINISH GRADES. LIMIT FINISHED GRADING TO AREAS THAT CAN BE PLANTED IN THE IMMEDIATE FUTURE.

WARRANTY & MAINTENANCE:

1. WARRANTY: INSTALLER SHALL REPAIR OR REPLACE ANY PLANTINGS THAT FAIL IN MATERIALS, WORKMANSHIP, OR GROWTH WITHIN ONE YEAR AFTER THE DATE OF SUBSTANTIAL COMPLETION. FAILURES INCLUDE, BUT ARE NOT LIMITED TO, THE FOLLOWING:
   - DEATH AND UNSATISFACTORY GROWTH, EXCEPT FOR DEFECTS RESULTING FROM NEGLECT, ABUSE BY OWNER, OR INCIDENTS THAT ARE BEYOND CONTRACTOR'S CONTROL.
2. MAINTENANCE: INITIAL MAINTENANCE SHALL BE PROVIDED IMMEDIATELY AFTER EACH AREA IS PLANTED AND CONTINUE UNTIL SUBSTANTIAL COMPLETION. UPON SUBSTANTIAL COMPLETION, MAINTENANCE FOR ALL PLANT MATERIAL SHALL BE PROVIDED FOR ONE YEAR AT A MINIMUM SHALL INCLUDE:
   - TREE AND SHRUB MAINTENANCE: MAINTAIN PLANTINGS BY PRUNING, CULTIVATING, WATERING, WEEDING, FERTILIZING, RESTORING PLANTING SAUCERS, AND RESETTING TO PROPER GRADES OR VERTICAL POSITION, AS REQUIRED TO ESTABLISH HEALTHY, VIABLE PLANTINGS. SPRAY OR TREAT AS REQUIRED TO KEEP TREES AND SHRUBS FREE OF INSECTS AND DISEASE.
   - PROTECT EXTERIOR PLANTS FROM DAMAGE DUE TO LANDSCAPE OPERATIONS, OPERATIONS BY OTHER CONTRACTORS AND TRADES, AND OTHERS. MAINTAIN PROTECTION DURING INSTALLATION AND MAINTENANCE PERIODS. TREAT, REPAIR, OR REPLACE DAMAGED PLANTINGS.

LANDSCAPE CALCULATIONS - TOWN OF ROLESVILLE

PERIMETER BUFFERS (LDO 6.2.2.1)

SUBJECT PROPERTY ZONED RM-CU, ZONING DISTRICT OF ADJACENT PROPERTIES IS RL OR R-30.
A TYPE 2 BUFFER (15' WIDTH) IS REQUIRED PER LDO 6.2.2.1.G AND IS PROPOSED HEREIN.

PLANT MATERIAL SHALL BE PROVIDED IN ACCORDANCE WITH THE BELOW MINIMUM STANDARDS
CANOPY TREES 3/100 LF
UNDERSTORY TREES 1/100 LF
SHRUBS 50/100 LF

TOTAL PERIMETER BUFFER 16,488 LF
PERIMETER BUFFER AREAS LEFT IN AN UNDISTURBED, VEGETATED CONDITION DO NOT REQUIRE REPLANTING OR FENCE INSTALLATION. WHERE BUFFER REPLANTING IS REQUIRED, AN ADDITIONAL 3 EVERGREEN UNDERSTORY TREES PER 100' MAY BE PROVIDED IN LIEU OF A 6' FENCE.

TOTAL LINEAR FEET TO BE REPLANTED: TBD

CANOPY TREES MINIMUM 2'' CALIPER, 8' HT AT TIME OF INSTALL (LDO 6.2.4.3.A)
REQUIRED: 495
PROVIDED: 495

UNDERSTORY TREES MINIMUM 1'' CALIPER, 8' HT AT TIME OF INSTALL (LDO 6.2.4.3.A)
REQUIRED: 165
PROVIDED: 165

SHRUBS SHALL REACH MINIMUM HEIGHT OF 30'' AND SPREAD OF 30'' WITHIN THREE YEARS
REQUIRED: 8244
PROVIDED: 8244

STREET BUFFERS

Street	Total Length	Required	Provided
STREET 'A' (MAIN)	6,484 LF	162 STREET TREES (1/40LF)	166
STREET 'B' (MAIN)	708 LF	18 STREET TREES (1/40LF)	14
STREET 'B' (COLLECTOR)	1,982 LF	40 STREET TREES (1/50LF)	40
STREET 'C' (MAIN)	844 LF	21 STREET TREES (1/40LF)	22
STREET 'C' (COLLECTOR)	374 LF	7 STREET TREES (1/50LF)	8
STREET 'D' (COLLECTOR)	2,107 LF	43 STREET TREES (1/50LF)	43
STREET 'E' (LOCAL)	1,931 LF	33 STREET TREES (1/60LF)	28
STREET 'F' (LOCAL)	1,043 LF	18 STREET TREES (1/60LF)	20
STREET 'G' (LOCAL)	1,258 LF	21 STREET TREES (1/60LF)	23
STREET 'H' (LOCAL)	2,191 LF	37 STREET TREES (1/60LF)	41
STREET 'I' (LOCAL)	1,656 LF	28 STREET TREES (1/60LF)	30
STREET 'J' (LOCAL)	1,126 LF	19 STREET TREES (1/60LF)	19
STREET 'K' (MAIN)	1,701 LF	43 STREET TREES (1/40LF)	40
STREET 'L' (LOCAL)	208 LF	3 STREET TREES (1/60LF)	4
STREET 'M' (LOCAL)	208 LF	3 STREET TREES (1/60LF)	4
STREET 'N' (LOCAL)	1,921 LF	32 STREET TREES (1/60LF)	36
STREET 'O' (COLLECTOR)	3,383 LF	68 STREET TREES (1/50LF)	74
STREET 'P' (LOCAL)	1,319 LF	24 STREET TREES (1/60LF)	22
STREET 'Q' (LOCAL)	1,260 LF	21 STREET TREES (1/60LF)	23
STREET 'R' (LOCAL)	1,409 LF	24 STREET TREES (1/60LF)	23
STREET 'S' (LOCAL)	856 LF	15 STREET TREES (1/60LF)	17
STREET 'T' (LOCAL)	807 LF	14 STREET TREES (1/60LF)	16

PLANT DIVERSITY (LDO 6.2.4.3)

- THERE ARE GREATER THAN 100 TREES PLANTED ON SITE
- THE MINIMUM NUMBER OF GENERA REQUIRED IS FOUR (4)
- A MAXIMUM OF 40% OF ANY ONE GENERA IS ALLOWED

TOTAL CANOPY TREES PROVIDED: 881 CANOPY TREES
MAXIMUM OF ANY GENERA ALLOWED: 353 (40%)
MAXIMUM OF ANY GENERA PROPOSED: 65
*CALCULATIONS REFLECT STREET TREE QUANTITIES, FINAL CALCULATIONS TO BE PROVIDED UPON DETERMINATION OF PERIMETER BUFFER REPLANTING TOTAL LINEAR FOOTAGE.

ADDITIONAL LDO PLANTING NOTES

- NO TREE MAY BE PLANTED CLOSER THAN 35' OF A STREET CORNER, MEASURED FROM THE POINT OF NEAREST INTERSECTION CURBS.
- NO STREET TREE SHALL BE PLANTED CLOSER THAN 10' FROM ANY FIRE HYDRANT.

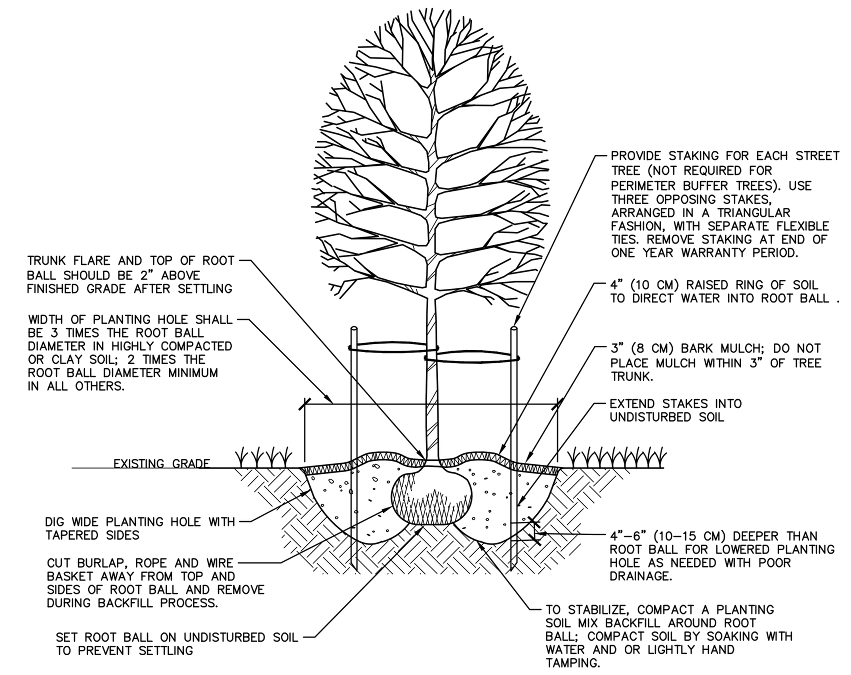

NOTES:
1. SELECT TREES THAT HAVE: STRONG CENTRAL LEADER; CROWN WITH FULL FOLIAGE; ARE GROWN IN HEAVY CLAY SOIL WITH DRIP IRRIGATION.
2. BEFORE INSTALLING PLANTING SOIL MIX BACKFILL AROUND ROOT BALL, BE SURE TO SOAK HOLE TO CONFIRM WATER FILTERS THROUGH UNDISTURBED SOIL. DESIGN ALTERNATIVE DRAINAGE SYSTEM IF REQUIRED.
3. A SOIL EXPERT CAN BE CONSULTED TO HELP MODIFY AND FERTILIZE TOPSOIL TO CREATE AN ACCEPTABLE PLANTING SOIL MIX FOR THE SITE CONDITIONS AND SPECIFIC TREE SPECIES.
4. IF USING CONTAINER GROWN TREES, USE FINGERS OR SMALL HAND TOOLS TO PULL ROOTS OUT OF THE OUTER LAYER OF POTTING SOIL; THEN CUT OR PULL APART ANY ROOTS CIRCLING THE PERIMETER OF THE CONTAINER.
5. THOROUGHLY SOAK THE TREE ROOT BALL AND ADJACENT PREPARED SOIL SEVERAL TIMES DURING THE FIRST MONTH AFTER PLANTING AND DURING DRY PERIODS.

01 TREE INSTALLATION
SCALE: NTS

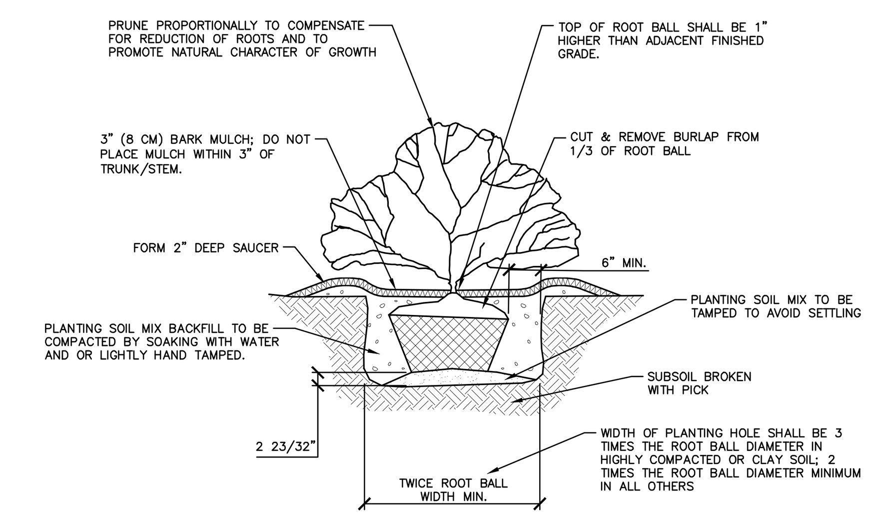

02 SHRUB INSTALLATION
SCALE: NTS

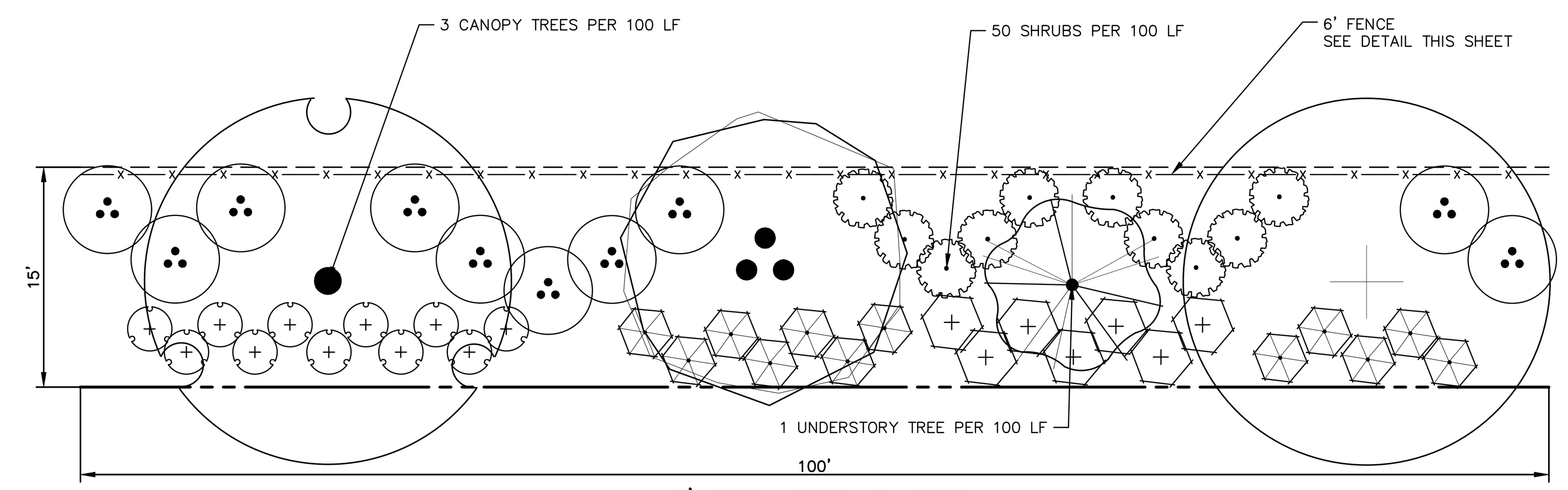

15' PERIMETER BUFFER
(100' TYPICAL DETAIL)
SCALE: 1" = 10'

NOTES:
1. UPON INSTALLATION OF THE REQUIRED PERIMETER BUFFERS, THE PROJECT TEAM WILL PROMPTLY COORDINATE WITH THE TOWN OF ROLESVILLE LDA TO INSPECT AREAS THAT HAVE PROPOSED TO UTILIZE EXISTING VEGETATION TO SUPPLEMENT THE REQUIREMENT OF A FENCE THAT IS ASSOCIATED WITH A TYPE 2 BUFFER. UPON INSPECTION, THE LDA RESERVES THE RIGHT TO REQUIRE ADDITIONAL PLANTINGS AND/OR FENCING IN AREAS NOT MEETING THE INTENT OF A TYPE 2 PERIMETER BUFFER.
2. LOCATION AND EXTENTS OF 6 FT FENCING TO BE COORDINATED DURING INSTALLATION TO ACCOMODATE EXISTING PLANT MATERIAL.
3. PERIMETER BUFFER PLANTING REQUIREMENTS
CANOPY TREE – MIN 3 PER 100 LINEAR FEET
UNDERSTORY TREE – MIN 1 PER 100 LINEAR FEET
SHRUBS – 50 PER 100 LINEAR FEET

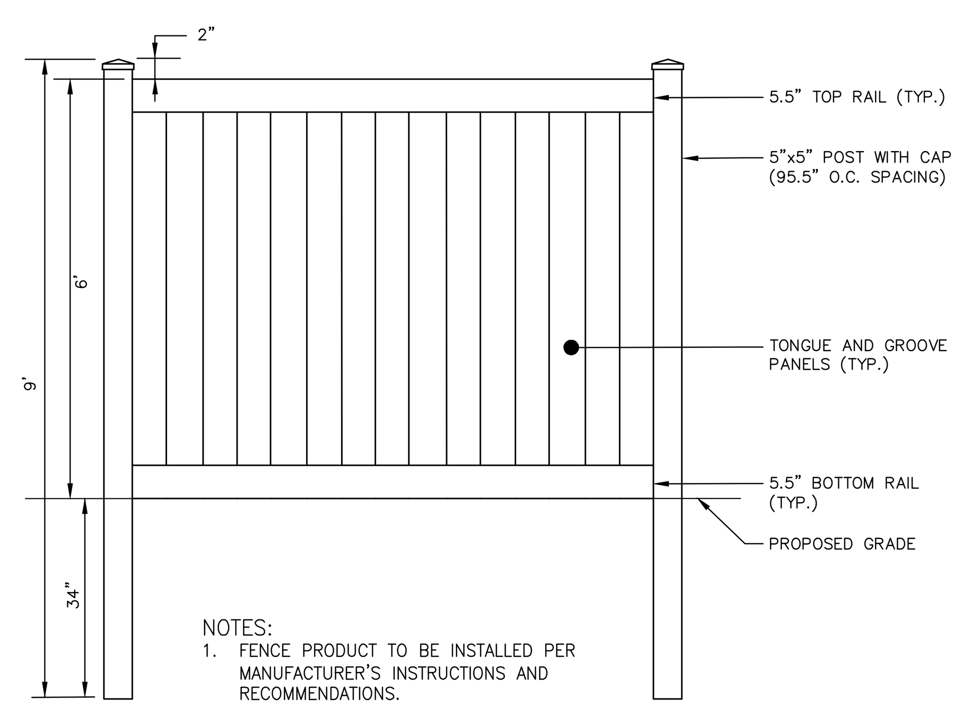

NOTES:
1. FENCE PRODUCT TO BE INSTALLED PER MANUFACTURER'S INSTRUCTIONS AND RECOMMENDATIONS.

PRODUCT INFORMATION:
SUPPLIER: ILLUSIONS VINYL FENCE
MODEL: PRIVACY TOMGUE AND GROOVE (V300-6)

https://www.https://illusionsfence.com/fence_styles/privacy-tongue-groove/

1.800.339.3362

03 FENCE
SCALE: NTS

FINAL DRAWING - NOT RELEASED FOR CONSTRUCTION

MCADAMS
The John R. McAdams Company, Inc.
2905 Meridian Parkway
Durham, NC 27713

phone 919. 361. 5000
fax 919. 361. 2269
license number: C-0293, C-187

www.mcadamsco.com

CLIENT

ALLIANCE GROUP OF NC, LLC
7208 FALLS OF NEUSE RD, SUITE 101
RALEIGH, NORTH CAROLINA 27615
CONTACT: JACOB ANDERSON
PHONE: 919. 239. 9486

AGNC
BROKERAGE | CONSULTING | PLANNING

PEARCE FARM - PHASES 1-3
CONSTRUCTION DRAWINGS - PACKAGE 1
BURLINGTON MILLS ROAD
TOWN OF ROLESVILLE, NORTH CAROLINA

CID-24-08

NORTH CAROLINA REGISTERED LANDSCAPE ARCHITECT 2027 SARA RUNGE DONOHOE
PRELIMINARY NOT FOR CONSTRUCTION

REVISIONS

NO.	DATE	
1	02. 03. 2025	REVISED PER TOWN, CITY AND COUNTY COMMENTS

PLAN INFORMATION

PROJECT NO.	AGN23001
FILENAME	AGN23001-LS1
CHECKED BY	JMH
DRAWN BY	SMO
SCALE	NTS
DATE	12. 02. 2024

SHEET

LANDSCAPE CALCULATIONS AND DETAILS

L5.15

X:\Projects\AGN\AGN23001\04-Production\Engineering\Construction Drawings\Current Drawings\AGN23001-LS1.dwg, 1/31/2025 1:12:43 PM, John-Michael Henson

PLANT SCHEDULE

SYMBOL	CODE	QTY	BOTANICAL NAME	COMMON NAME	CAL	HEIGHT	REMARKS
CANOPY TREES							
	ARA	29	ACER RUBRUM 'AUTUMN BLAZE'	AUTUMN BLAZE RED MAPLE	2.5"	12' MIN	STREET TREE, MATURE HEIGHT: 40'–60', CALIPER SIZE: 30'–50'
	ARR	20	ACER RUBRUM 'RED SUNSET'	RED SUNSET MAPLE	2.5"	12' MIN	STREET TREE, MATURE HEIGHT: 40'–50', CALIPER SIZE: 30'–40'
	ARS	26	ACER RUBRUM 'SUMMER RED'	SUMMER RED RED MAPLE	2.5"	12' MIN	STREET TREE, MATURE HEIGHT: 35'–40', MATURE WIDTH: 20'–25'
	ASL	28	ACER SACCHARUM 'LEGACY'	LEGACY SUGAR MAPLE	2.5"	12' MIN	STREET TREE, MATURE HEIGHT: 40'–50', CALIPER SIZE: 25'–35'
	CBE	4	CARPINUS BETULUS	EUROPEAN HORNBEAM	2.5"	12' MIN	STREET TREE, MATURE HEIGHT: 30'–40', CALIPER SIZE: 20'–30'
	CIP	9	CARYA ILLINOINENSIS	PECAN	2.5"	12' MIN	STREET TREE, MATURE HEIGHT: 70'–100', CALIPER SIZE: 40'–75'
	CBS	22	CATALPA BIGNONIODES	SOUTHERN CATALPA	2.5"	12' MIN	STREET TREE, MATURE HEIGHT: 30'–60', CALIPER SIZE: 20'–40'
	FGA	24	FAGUS GRANDIFOLIA	AMERICAN BEECH	2.5"	12' MIN	STREET TREE, MATURE HEIGHT: 50'–80', CALIPER SIZE: 40'–80'
	FPG	4	FRAXINUS PENNSYLVANICA	GREEN ASH	2.5"	12' MIN	STREET TREE, MATURE HEIGHT: 50'–70', CALIPER SIZE: 35'–50'
	GBA	44	GINKGO BILOBA 'AUTUMN GOLD' TM	MAIDENHAIR TREE	2.5"	12' MIN	STREET TREE, MATURE HEIGHT: 40'–50', CALIPER SIZE: 25'–30'
	LTT	47	LIRIODENDRON TULIPIFERA	TULIP TREE	2.5"	12' MIN	STREET TREE, MATURE HEIGHT: 40'–90', CALIPER SIZE: 30'–50'
	MGD	16	MAGNOLIA GRANDIFLORA 'D.D. BLANCHARD' TM	SOUTHERN MAGNOLIA	–	12' MIN	STREET TREE, MATURE HEIGHT: 50'–70', MATURE WIDTH: 20'–35'
	NSS	33	NYSSA SYLVATICA	SOUR GUM	2.5"	12' MIN	STREET TREE, MATURE HEIGHT: 30'–50', CALIPER SIZE: 20'–30'
	POA	20	PLATANUS OCCIDENTALIS	AMERICAN SYCAMORE	2.5"	12' MIN	STREET TREE, MATURE HEIGHT: 75'–100', CALIPER SIZE: 75'–100'
	QAW	23	QUERCUS ALBA	WHITE OAK	2.5"	12' MIN	STREET TREE, MATURE HEIGHT: 50'–80', CALIPER SIZE: 50'–80'
	QCS	9	QUERCUS COCCINEA	SCARLET OAK	2.5"	12' MIN	STREET TREE, MATURE HEIGHT: 50'–80', CALIPER SIZE: 45'–60'
	QLO	30	QUERCUS LYRATA	OVERCUP OAK	2.5"	12' MIN	STREET TREE, MATURE HEIGHT: 40'–60', CALIPER SIZE: 40'–60'
	QMB	8	QUERCUS MARILANDICA	BLACKJACK OAK	2.5"	12' MIN	STREET TREE, MATURE HEIGHT: 30'–50', CALIPER SIZE: 20'–40'
	QNN	24	QUERCUS NUTTALLII	NUTTALL OAK	2.5"	12' MIN	STREET TREE, MATURE HEIGHT: 50'–80', CALIPER SIZE: 40'–65'
	QPP	32	QUERCUS PALUSTRIS	PIN OAK	2.5"	12' MIN	STREET TREE, MATURE HEIGHT: 50'–70', CALIPER SIZE: 40'–60'
	QPW	31	QUERCUS PHELLOS	WILLOW OAK	2.5"	12' MIN	STREET TREE, MATURE HEIGHT: 40'–75', CALIPER SIZE: 25'–50'
	QVS	12	QUERCUS VIRGINIANA	SOUTHERN LIVE OAK	2.5"	12' MIN	STREET TREE, MATURE HEIGHT: 40'–80', CALIPER SIZE: 60'–100'
	TDB	19	TAXODIUM DISTICHUM	BALD CYPRESS	2.5"	12' MIN	STREET TREE, MATURE HEIGHT: 50'–70', CALIPER SIZE: 20'–45'
	UAP	29	ULMUS AMERICANA 'PRINCETON'	AMERICAN ELM	2.5"	12' MIN	STREET TREE, MATURE HEIGHT: 50'–70', CALIPER SIZE: 30'–50'
	ZSG	8	ZELKOVA SERRATA 'GREEN VASE'	SAWLEAF ZELKOVA	2.5"	12' MIN	STREET TREE, MATURE HEIGHT: 60'–80', CALIPER SIZE: 40'–50'
	ZSM	24	ZELKOVA SERRATA 'MYRIMAR'	MYRIMAR ZELKOVA	2.5"	12' MIN	STREET TREE, MATURE HEIGHT: 60'–80', CALIPER SIZE: 40'–50'
UNDERSTORY TREES							
	CCP	28	CERCIS CANADENSIS 'FOREST PANSY' TM	FOREST PANSY REDBUD	1"	8'	15' PERIMETER BUFFER UNDERSTORY TREE

SYMBOL	CODE	QTY	BOTANICAL NAME	COMMON NAME	CONT	HEIGHT	REMARKS
EVERGREEN SHRUBS							
	IVND	334	ILEX VOMITORIA 'NANA'	DWARF YAUPON	18" MIN		15' PERIMETER BUFFER SHRUB
	IPFS	275	ILLICIUM PARVIFLORUM 'FLORIDA SUNSHINE'	FLORIDA SUNSHINE ANISE TREE	24" MIN		15' PERIMETER BUFFER SHRUB
	MMWS	520	MAHONIA X MEDIA 'WINTER SUN'	MAHONIA HYBRID	18" MIN		15' PERIMETER BUFFER SHRUB
	OFSO	338	OSMANTHUS FRAGRANS	SWEET OLIVE	24" MIN		15' PERIMETER BUFFER SHRUB
	VTAR	193	VIBURNUM TINUS	ARROWWOOD	18" MIN		15' PERIMETER BUFFER SHRUB

X:\Projects\AGN\AGN23001\04-Production\Engineering\Construction Drawings\Current Drawings\AGN23001-LS1.dwg, 1/31/2025 1:13:09 PM, John-Michael Henson

FINAL DRAWING - NOT RELEASED FOR CONSTRUCTION

McADAMS
The John R. McAdams Company, Inc.
2905 Meridian Parkway
Durham, NC 27713

phone 919. 361. 5000
fax 919. 361. 2269
license number: C-0293, C-187

www.mcadamsco.com

CLIENT

ALLIANCE GROUP OF NC, LLC
7208 FALLS OF NEUSE RD, SUITE 101
RALEIGH, NORTH CAROLINA 27615
CONTACT: JACOB ANDERSON
PHONE: 919. 239. 9486

AGNC BROKERAGE | CONSULTING | PLANNING

PEARCE FARM - PHASES 1-3
CONSTRUCTION DRAWINGS - PACKAGE 1
BURLINGTON MILLS ROAD
TOWN OF ROLESVILLE, NORTH CAROLINA

CID-24-08

NORTH CAROLINA LANDSCAPE ARCHITECTURE SIMRA RUNGE DONOHOE 2027
RELEASED FOR CONSTRUCTION NOT FOR CONSTRUCTION

REVISIONS

NO.	DATE	
1	02. 03. 2025	REVISED PER TOWN, CITY AND COUNTY COMMENTS

PLAN INFORMATION

PROJECT NO.	AGN23001
FILENAME	AGN23001-LS1
CHECKED BY	JMH
DRAWN BY	SMO
SCALE	NTS
DATE	12. 02. 2024

SHEET

LANDSCAPE SCHEDULE

L5.16

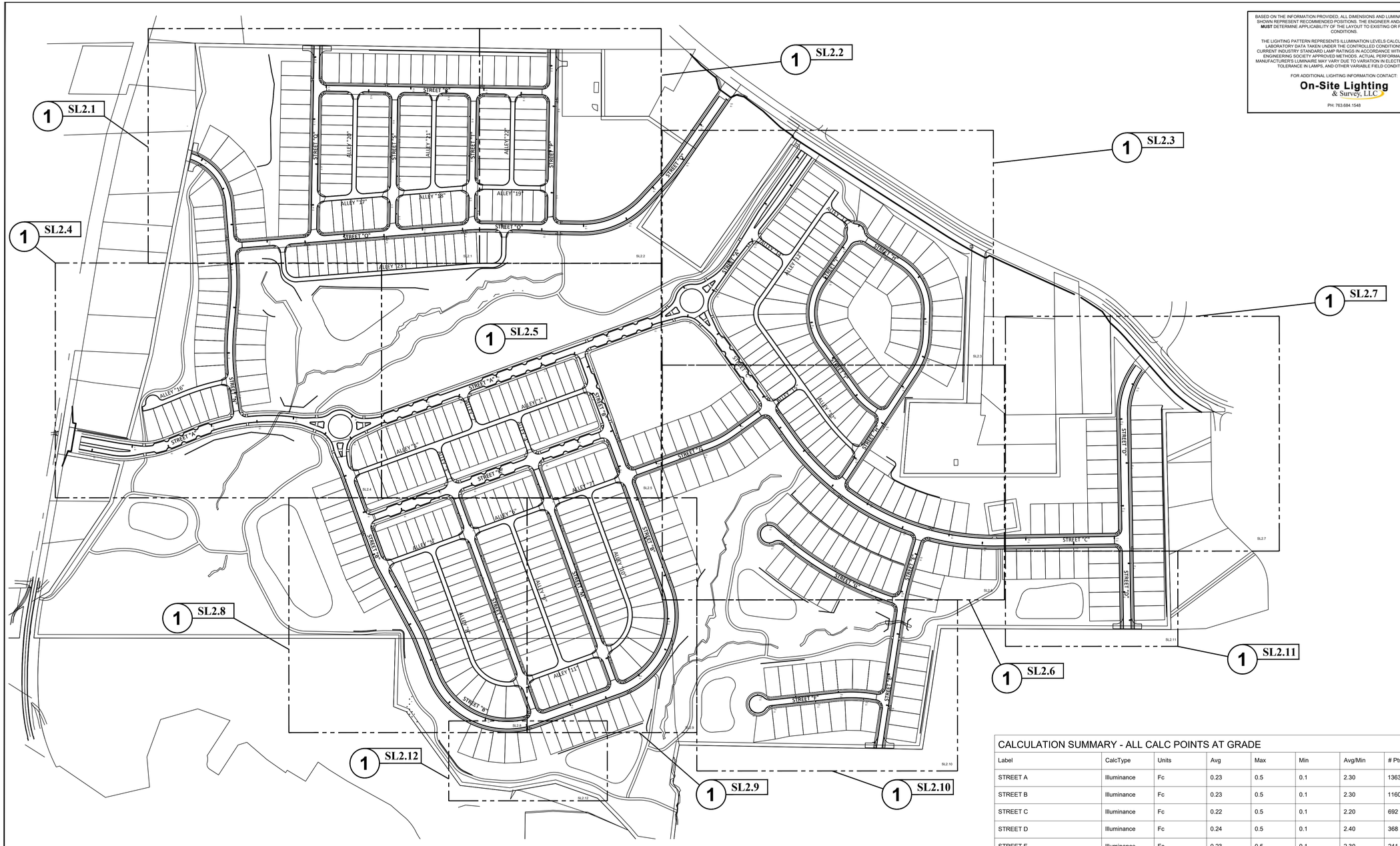

1 **PROPOSED LIGHTING PLAN**
SCALE: 1"= 200'-0"

0' 200' 400'

N

BASED ON THE INFORMATION PROVIDED. ALL DIMENSIONS AND LUMINAIRE LOCATIONS SHOWN REPRESENT RECOMMENDED POSITIONS. THE ENGINEER AND/OR ARCHITECT **MUST** DETERMINE APPLICABILITY OF THE LAYOUT TO EXISTING OR FUTURE FIELD CONDITIONS.

THE LIGHTING PATTERN REPRESENTS ILLUMINATION LEVELS CALCULATED FROM LABORATORY DATA TAKEN UNDER THE CONTROLLED CONDITIONS UTILIZING CURRENT INDUSTRY STANDARD LAMP RATINGS IN ACCORDANCE WITH ILLUMINATING ENGINEERING SOCIETY APPROVED METHODS. ACTUAL PERFORMANCE OF ANY MANUFACTURER'S LUMINAIRE MAY VARY DUE TO VARIATION IN ELECTRICAL VOLTAGE, TOLERANCE IN LAMPS, AND OTHER VARIABLE FIELD CONDITIONS.

FOR ADDITIONAL LIGHTING INFORMATION CONTACT:

On-Site Lighting & Survey, LLC

PH: 763.684.1548

CALCULATION SUMMARY - ALL CALC POINTS AT GRADE

Label	CalcType	Units	Avg	Max	Min	Avg/Min	# Pts
STREET A	Illuminance	Fc	0.23	0.5	0.1	2.30	1363
STREET B	Illuminance	Fc	0.23	0.5	0.1	2.30	1160
STREET C	Illuminance	Fc	0.22	0.5	0.1	2.20	692
STREET D	Illuminance	Fc	0.24	0.5	0.1	2.40	368
STREET E	Illuminance	Fc	0.23	0.5	0.1	2.30	241
STREET F	Illuminance	Fc	0.16	0.6	0.1	1.60	141
STREET G	Illuminance	Fc	0.16	0.7	0.1	1.60	166
STREET H	Illuminance	Fc	0.22	0.5	0.1	2.20	293
STREET I	Illuminance	Fc	0.23	0.5	0.1	2.30	244
STREET J	Illuminance	Fc	0.21	0.5	0.1	2.10	125
STREET K	Illuminance	Fc	0.21	0.5	0.1	2.10	352
STREET L	Illuminance	Fc	0.20	0.6	0.1	2.00	249
STREET M	Illuminance	Fc	0.20	0.7	0.1	2.00	244
STREET N	Illuminance	Fc	0.22	0.5	0.1	2.20	291
STREET O	Illuminance	Fc	0.22	0.5	0.1	2.20	655
STREET P	Illuminance	Fc	0.21	0.5	0.1	2.10	192
STREET Q	Illuminance	Fc	0.22	0.5	0.1	2.20	207
STREET R	Illuminance	Fc	0.22	0.5	0.1	2.20	246
STREET S	Illuminance	Fc	0.19	0.7	0.1	1.90	130
STREET T	Illuminance	Fc	0.19	0.7	0.1	1.90	128

LUMINAIRE SCHEDULE

Symbol	Qty	Label	Arrangement	LLF	Description	Lum. Watts	Lum. Lumens	BUG Rating
	131	R1	SINGLE	0.950	AEL ATBM 247L P25 XX 40K R3 AY LED Street Light / Pole - 30'-0 Mounting Height	34	3335	B1-U3-G2
	47	D1	SINGLE	0.950	AEL HTFL P10 XX 40K R3VC AP 8R Post Top Decorative Fixture / Pole - 14'-0 Pole	25.3	3221	B1-U5-G2

_____
Date

_____
LDA, Town of Rolesville
Rolesville, North Carolina"

"I, _____, Review Officer of the Town of Rolesville, Wake County, certify that the map or plat to which this certification is affixed meets all statutory requirements for recording.

_____
Review Officer Date"

On-Site Lighting & Survey, LLC

1111 HIGHWAY 25 NORTH
SUITE 201
BUFFALO MN 55313

PH:763.684.1548
FAX:763.682.9048

PROPERTY OWNER

McADAMS
The John R. McAdams Company, Inc.
2905 Meridian Parkway
Durham, NC 27713

phone 919. 361. 5000
fax 919. 361. 2269
license number: C-0293, C-187

www.mcadamsco.com

PROJECT INFO

PEARCE FARM

ROLESVILLE, NC

ENGINEER INFO

ENGINEER SEAL

REVISIONS

#	DATE	INIT	DESCRIPTION
1			
2			
3			
4			
5			
6			

SHEET DESCRIPTION

PROPOSED LIGHTING PLAN

PROJECT #

ISSUE DATE

07.24.2024

DESIGN LEVEL

2

AGI

C.D.HEANER

CAD

C.D.HEANER

SHEET#: **SL2.0** REV #: **0**

_____
Date

_____
LDA, Town of Rolesville
Rolesville, North Carolina"

"I, _____, Review Officer of the Town of Rolesville, Wake County, certify that the map or plat to which this certification is affixed meets all statutory requirements for recording.

_____
Review Officer Date"

1 **PROPOSED PHOTOMETRIC DETAIL**
SCALE: 1"= 50'-0"

0' 50' 100'

BASED ON THE INFORMATION PROVIDED, ALL DIMENSIONS AND LUMINAIRE LOCATIONS SHOWN REPRESENT RECOMMENDED POSITIONS. THE ENGINEER AND/OR ARCHITECT **MUST** DETERMINE APPLICABILITY OF THE LAYOUT TO EXISTING OR FUTURE FIELD CONDITIONS.

THE LIGHTING PATTERN REPRESENTS ILLUMINATION LEVELS CALCULATED FROM LABORATORY DATA TAKEN UNDER THE CONTROLLED CONDITIONS UTILIZING CURRENT INDUSTRY STANDARD LAMP RATINGS IN ACCORDANCE WITH ILLUMINATING ENGINEERING SOCIETY APPROVED METHODS. ACTUAL PERFORMANCE OF ANY MANUFACTURER'S LUMINAIRE MAY VARY DUE TO VARIATION IN ELECTRICAL VOLTAGE, TOLERANCE IN LAMPS, AND OTHER VARIABLE FIELD CONDITIONS.

FOR ADDITIONAL LIGHTING INFORMATION CONTACT:
On-Site Lighting & Survey, LLC
PH: 763.684.1548

On-Site Lighting & Survey, LLC
1111 HIGHWAY 25 NORTH
SUITE 201
BUFFALO MN 55313
PH:763.684.1548
FAX:763.682.9048

PROPERTY OWNER
McADAMS
The John R. McAdams Company, Inc.
2905 Meridian Parkway
Durham, NC 27713
phone 919. 361. 5000
fax 919. 361. 2269
license number: C-0293, C-187
www.mcadamsco.com

PROJECT INFO
PEARCE FARM
ROLESVILLE, NC

ENGINEER INFO

ENGINEER SEAL

REVISIONS

#	DESCRIPTION	INIT	DATE
1			
2			
3			
4			
5			
6			

SHEET DESCRIPTION: **PROPOSED PHOTOMETRIC PLAN**
PROJECT #:
ISSUE DATE: **07.24.2024**
DESIGN LEVEL: **2**
AGI: **C.D.HEANER**
CAD: **C.D.HEANER**
SHEET#: **SL2.1** REV #: **0**

Date

LDA, Town of Rolesville
Rolesville, North Carolina"

"I, _____, Review Officer of the Town of Rolesville, Wake County, certify that the map or plat to which this certification is affixed meets all statutory requirements for recording.

Review Officer Date"

1 PROPOSED PHOTOMETRIC DETAIL
SCALE: 1"= 50'-0"

N

0' 50' 100'

BASED ON THE INFORMATION PROVIDED. ALL DIMENSIONS AND LUMINAIRE LOCATIONS SHOWN REPRESENT RECOMMENDED POSITIONS. THE ENGINEER AND/OR ARCHITECT **MUST** DETERMINE APPLICABILITY OF THE LAYOUT TO EXISTING OR FUTURE FIELD CONDITIONS.

THE LIGHTING PATTERN REPRESENTS ILLUMINATION LEVELS CALCULATED FROM LABORATORY DATA TAKEN UNDER THE CONTROLLED CONDITIONS UTILIZING CURRENT INDUSTRY STANDARD LAMP RATINGS IN ACCORDANCE WITH ILLUMINATING ENGINEERING SOCIETY APPROVED METHODS. ACTUAL PERFORMANCE OF ANY MANUFACTURER'S LUMINAIRE MAY VARY DUE TO VARIATION IN ELECTRICAL VOLTAGE, TOLERANCE IN LAMPS, AND OTHER VARIABLE FIELD CONDITIONS.

FOR ADDITIONAL LIGHTING INFORMATION CONTACT:

On-Site Lighting & Survey, LLC

PH: 763.684.1548

On-Site Lighting & Survey, LLC

1111 HIGHWAY 25 NORTH
SUITE 201
BUFFALO MN 55313

PH:763.684.1548
FAX:763.682.9048

PROPERTY OWNER

McADAMS

The John R. McAdams Company, Inc.
2905 Meridian Parkway
Durham, NC 27713

phone 919. 361. 5000
fax 919. 361. 2269
license number: C-0293, C-187

www.mcadamsco.com

PROJECT INFO

PEARCE FARM

ROLESVILLE, NC

ENGINEER INFO

ENGINEER SEAL

REVISIONS

#	DATE	INIT	DESCRIPTION
1			
2			
3			
4			
5			
6			

SHEET DESCRIPTION

PROPOSED PHOTOMETRIC PLAN

PROJECT #

ISSUE DATE

07.24.2024

DESIGN LEVEL

2

AGI

C.D.HEANER

CAD

C.D.HEANER

SHEET#: **SL2.4** **REV #:** **0**

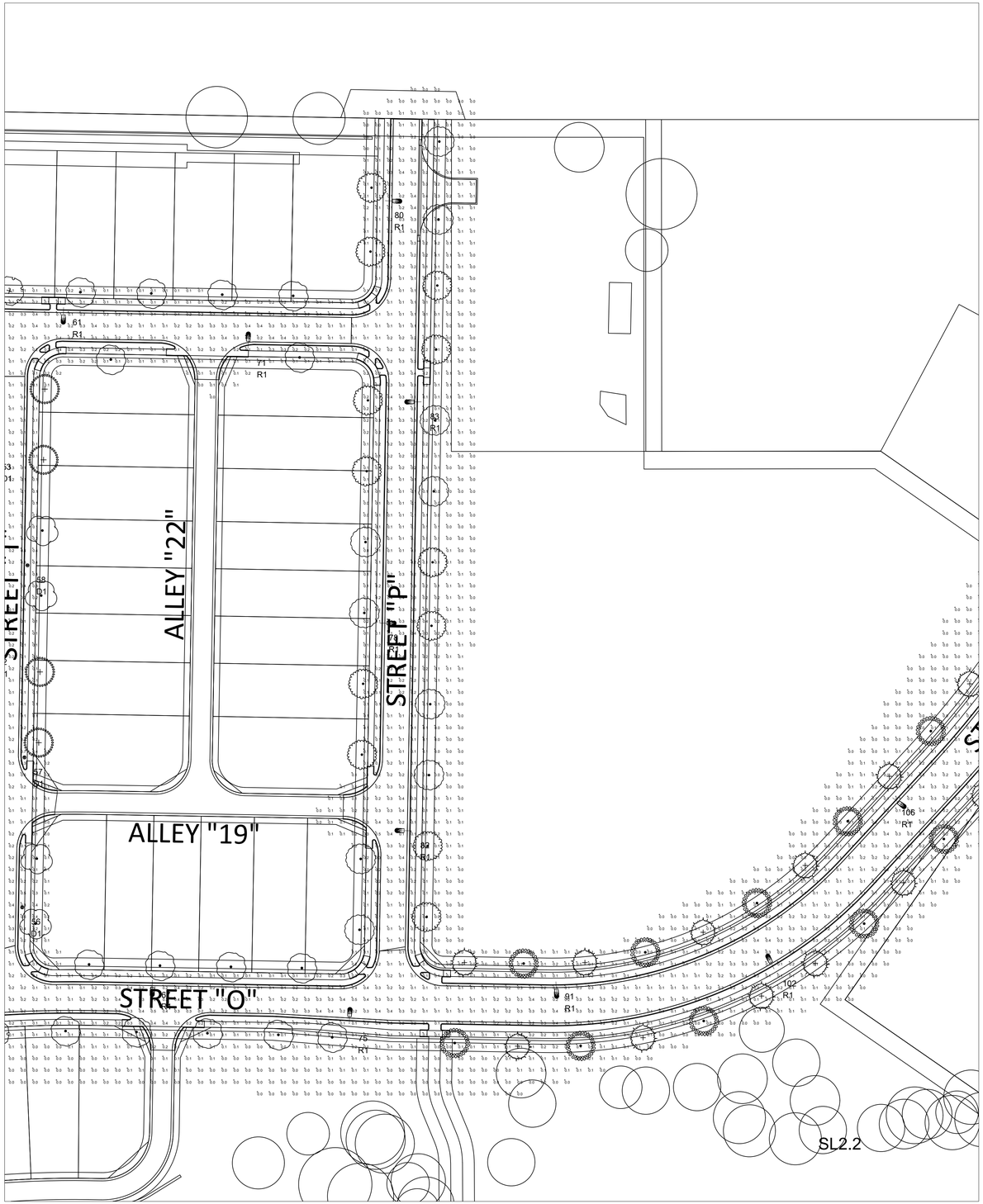

1 PROPOSED PHOTOMETRIC DETAIL
SCALE: 1"= 50'-0"

N

0' 50' 100'

_____
Date

_____
LDA, Town of Rolesville
Rolesville, North Carolina"

"I, _____, Review Officer of the Town of Rolesville, Wake County, certify that the map or plat to which this certification is affixed meets all statutory requirements for recording.

_____
Review Officer Date"

BASED ON THE INFORMATION PROVIDED. ALL DIMENSIONS AND LUMINAIRE LOCATIONS SHOWN REPRESENT RECOMMENDED POSITIONS. THE ENGINEER AND/OR ARCHITECT **MUST** DETERMINE APPLICABILITY OF THE LAYOUT TO EXISTING OR FUTURE FIELD CONDITIONS.

THE LIGHTING PATTERN REPRESENTS ILLUMINATION LEVELS CALCULATED FROM LABORATORY DATA TAKEN UNDER THE CONTROLLED CONDITIONS UTILIZING CURRENT INDUSTRY STANDARD LAMP RATINGS IN ACCORDANCE WITH ILLUMINATING ENGINEERING SOCIETY APPROVED METHODS. ACTUAL PERFORMANCE OF ANY MANUFACTURER'S LUMINAIRE MAY VARY DUE TO VARIATION IN ELECTRICAL VOLTAGE, TOLERANCE IN LAMPS, AND OTHER VARIABLE FIELD CONDITIONS.

FOR ADDITIONAL LIGHTING INFORMATION CONTACT:
On-Site Lighting & Survey, LLC
PH: 763.684.1548

On-Site Lighting & Survey, LLC

1111 HIGHWAY 25 NORTH
SUITE 201
BUFFALO MN 55313

PH:763.684.1548
FAX:763.682.9048

PROPERTY OWNER

McADAMS
The John R. McAdams Company, Inc.
2905 Meridian Parkway
Durham, NC 27713

phone 919. 361. 5000
fax 919. 361. 2269
license number: C-0293, C-187

www.mcadamsco.com

PROJECT INFO

PEARCE FARM

ROLESVILLE, NC

ENGINEER INFO

ENGINEER SEAL

REVISIONS

#	DATE	INIT	DESCRIPTION
1			
2			
3			
4			
5			
6			

SHEET DESCRIPTION: **PROPOSED PHOTOMETRIC PLAN**

PROJECT #:

ISSUE DATE: **07.24.2024**

DESIGN LEVEL: **2**

AGI: **C.D.HEANER**

CAD: **C.D.HEANER**

SHEET#: **SL2.2** REV #: **0**

1 **PROPOSED PHOTOMETRIC DETAIL**
SCALE: 1"= 50'-0"

N

0' 50' 100'

_____
Date

_____
LDA, Town of Rolesville
Rolesville, North Carolina"

"I, _____, Review Officer of the Town of Rolesville, Wake County, certify that the map or plat to which this certification is affixed meets all statutory requirements for recording.

_____
Review Officer Date"

BASED ON THE INFORMATION PROVIDED. ALL DIMENSIONS AND LUMINAIRE LOCATIONS SHOWN REPRESENT RECOMMENDED POSITIONS. THE ENGINEER AND/OR ARCHITECT **MUST** DETERMINE APPLICABILITY OF THE LAYOUT TO EXISTING OR FUTURE FIELD CONDITIONS.

THE LIGHTING PATTERN REPRESENTS ILLUMINATION LEVELS CALCULATED FROM LABORATORY DATA TAKEN UNDER THE CONTROLLED CONDITIONS UTILIZING CURRENT INDUSTRY STANDARD LAMP RATINGS IN ACCORDANCE WITH ILLUMINATING ENGINEERING SOCIETY APPROVED METHODS. ACTUAL PERFORMANCE OF ANY MANUFACTURER'S LUMINAIRE MAY VARY DUE TO VARIATION IN ELECTRICAL VOLTAGE, TOLERANCE IN LAMPS, AND OTHER VARIABLE FIELD CONDITIONS.

FOR ADDITIONAL LIGHTING INFORMATION CONTACT:
On-Site Lighting & Survey, LLC
PH: 763.684.1548

On-Site Lighting & Survey, LLC
1111 HIGHWAY 25 NORTH
SUITE 201
BUFFALO MN 55313
PH:763.684.1548
FAX:763.682.9048

PROPERTY OWNER

McADAMS
The John R. McAdams Company, Inc.
2905 Meridian Parkway
Durham, NC 27713
phone 919. 361. 5000
fax 919. 361. 2269
license number: C-0293, C-187
www.mcadamsco.com

PROJECT INFO

PEARCE FARM
ROLESVILLE, NC

ENGINEER INFO

ENGINEER SEAL

REVISIONS

#	DATE	INIT	DESCRIPTION
1			
2			
3			
4			
5			
6			

SHEET DESCRIPTION: **PROPOSED PHOTOMETRIC PLAN**

PROJECT #:

ISSUE DATE: **07.24.2024**

DESIGN LEVEL: **2**

AGI: **C.D.HEANER**

CAD: **C.D.HEANER**

SHEET#: **SL2.3** REV #: **0**

1 **PROPOSED PHOTOMETRIC DETAIL**
SCALE: 1"= 50'-0"

N

0' 50' 100'

_____
Date

_____
LDA, Town of Rolesville
Rolesville, North Carolina"

"I, _____, Review Officer of the Town of Rolesville, Wake County, certify that the map or plat to which this certification is affixed meets all statutory requirements for recording.

_____
Review Officer Date"

BASED ON THE INFORMATION PROVIDED. ALL DIMENSIONS AND LUMINAIRE LOCATIONS SHOWN REPRESENT RECOMMENDED POSITIONS. THE ENGINEER AND/OR ARCHITECT **MUST** DETERMINE APPLICABILITY OF THE LAYOUT TO EXISTING OR FUTURE FIELD CONDITIONS.

THE LIGHTING PATTERN REPRESENTS ILLUMINATION LEVELS CALCULATED FROM LABORATORY DATA TAKEN UNDER THE CONTROLLED CONDITIONS UTILIZING CURRENT INDUSTRY STANDARD LAMP RATINGS IN ACCORDANCE WITH ILLUMINATING ENGINEERING SOCIETY APPROVED METHODS. ACTUAL PERFORMANCE OF ANY MANUFACTURER'S LUMINAIRE MAY VARY DUE TO VARIATION IN ELECTRICAL VOLTAGE, TOLERANCE IN LAMPS, AND OTHER VARIABLE FIELD CONDITIONS.

FOR ADDITIONAL LIGHTING INFORMATION CONTACT:

On-Site Lighting & Survey, LLC

PH: 763.684.1548

On-Site Lighting & Survey, LLC

1111 HIGHWAY 25 NORTH
SUITE 201
BUFFALO MN 55313

PH:763.684.1548
FAX:763.682.9048

PROPERTY OWNER

McADAMS
The John R. McAdams Company, Inc.
2905 Meridian Parkway
Durham, NC 27713

phone 919. 361. 5000
fax 919. 361. 2269
license number: C-0293, C-187

www.mcadamsco.com

PROJECT INFO

PEARCE FARM

ROLESVILLE, NC

ENGINEER INFO

ENGINEER SEAL

REVISIONS

#	DATE	INIT	DESCRIPTION
1			
2			
3			
4			
5			
6			

SHEET DESCRIPTION: **PROPOSED PHOTOMETRIC PLAN**

PROJECT #:

ISSUE DATE: **07.24.2024**

DESIGN LEVEL: **2**

AGI: **C.D.HEANER**

CAD: **C.D.HEANER**

SHEET#: **SL2.5** REV #: **0**

Date

LDA, Town of Rolesville
Rolesville, North Carolina"

"I, _____, Review Officer of the Town of Rolesville, Wake County, certify that the map or plat to which this certification is affixed meets all statutory requirements for recording.

Review Officer Date"

1 PROPOSED PHOTOMETRIC DETAIL
SCALE: 1"= 50'-0"

N

0' 50' 100'

BASED ON THE INFORMATION PROVIDED. ALL DIMENSIONS AND LUMINAIRE LOCATIONS SHOWN REPRESENT RECOMMENDED POSITIONS. THE ENGINEER AND/OR ARCHITECT **MUST** DETERMINE APPLICABILITY OF THE LAYOUT TO EXISTING OR FUTURE FIELD CONDITIONS.

THE LIGHTING PATTERN REPRESENTS ILLUMINATION LEVELS CALCULATED FROM LABORATORY DATA TAKEN UNDER THE CONTROLLED CONDITIONS UTILIZING CURRENT INDUSTRY STANDARD LAMP RATINGS IN ACCORDANCE WITH ILLUMINATING ENGINEERING SOCIETY APPROVED METHODS. ACTUAL PERFORMANCE OF ANY MANUFACTURER'S LUMINAIRE MAY VARY DUE TO VARIATION IN ELECTRICAL VOLTAGE, TOLERANCE IN LAMPS, AND OTHER VARIABLE FIELD CONDITIONS.

FOR ADDITIONAL LIGHTING INFORMATION CONTACT:

On-Site Lighting & Survey, LLC

PH: 763.684.1548

On-Site Lighting & Survey, LLC

1111 HIGHWAY 25 NORTH
SUITE 201
BUFFALO MN 55313

PH:763.684.1548
FAX:763.682.9048

PROPERTY OWNER

McADAMS
The John R. McAdams Company, Inc.
2905 Meridian Parkway
Durham, NC 27713

phone 919. 361. 5000
fax 919. 361. 2269
license number: C-0293, C-187

www.mcadamsco.com

PROJECT INFO

PEARCE FARM

ROLESVILLE, NC

ENGINEER INFO

ENGINEER SEAL

REVISIONS

#	DATE	INIT	DESCRIPTION
1			
2			
3			
4			
5			
6			

SHEET DESCRIPTION: **PROPOSED PHOTOMETRIC PLAN**

PROJECT #:

ISSUE DATE: **07.24.2024**

DESIGN LEVEL: **2**

AGI: **C.D.HEANER**

CAD: **C.D.HEANER**

SHEET#: **SL2.6** REV#: **0**

1 **PROPOSED PHOTOMETRIC DETAIL**
SCALE: 1"= 50'-0"

N

0' 50' 100'

BASED ON THE INFORMATION PROVIDED, ALL DIMENSIONS AND LUMINAIRE LOCATIONS SHOWN REPRESENT RECOMMENDED POSITIONS. THE ENGINEER AND/OR ARCHITECT **MUST** DETERMINE APPLICABILITY OF THE LAYOUT TO EXISTING OR FUTURE FIELD CONDITIONS.

THE LIGHTING PATTERN REPRESENTS ILLUMINATION LEVELS CALCULATED FROM LABORATORY DATA TAKEN UNDER THE CONTROLLED CONDITIONS UTILIZING CURRENT INDUSTRY STANDARD LAMP RATINGS IN ACCORDANCE WITH ILLUMINATING ENGINEERING SOCIETY APPROVED METHODS. ACTUAL PERFORMANCE OF ANY MANUFACTURER'S LUMINAIRE MAY VARY DUE TO VARIATION IN ELECTRICAL VOLTAGE, TOLERANCE IN LAMPS, AND OTHER VARIABLE FIELD CONDITIONS.

FOR ADDITIONAL LIGHTING INFORMATION CONTACT:

On-Site Lighting & Survey, LLC

PH: 763.684.1548

_____
Date

_____
LDA, Town of Rolesville
Rolesville, North Carolina"

"I, _____, Review Officer of the Town of Rolesville, Wake County, certify that the map or plat to which this certification is affixed meets all statutory requirements for recording.

_____
Review Officer Date"

On-Site Lighting & Survey, LLC

1111 HIGHWAY 25 NORTH
SUITE 201
BUFFALO MN 55313

PH:763.684.1548
FAX:763.682.9048

PROPERTY OWNER

McADAMS
The John R. McAdams Company, Inc.
2905 Meridian Parkway
Durham, NC 27713

phone 919. 361. 5000
fax 919. 361. 2269
license number: C-0293, C-187

www.mcadamsco.com

PROJECT INFO

PEARCE FARM

ROLESVILLE, NC

ENGINEER INFO

ENGINEER SEAL

REVISIONS

#	DESCRIPTION	INIT	DATE
1			
2			
3			
4			
5			
6			

SHEET DESCRIPTION: **PROPOSED PHOTOMETRIC PLAN**

PROJECT #:

ISSUE DATE: **07.24.2024**

DESIGN LEVEL: **2**

AGI: **C.D.HEANER**

CAD: **C.D.HEANER**

SHEET#: **SL2.7** **REV #**: **0**

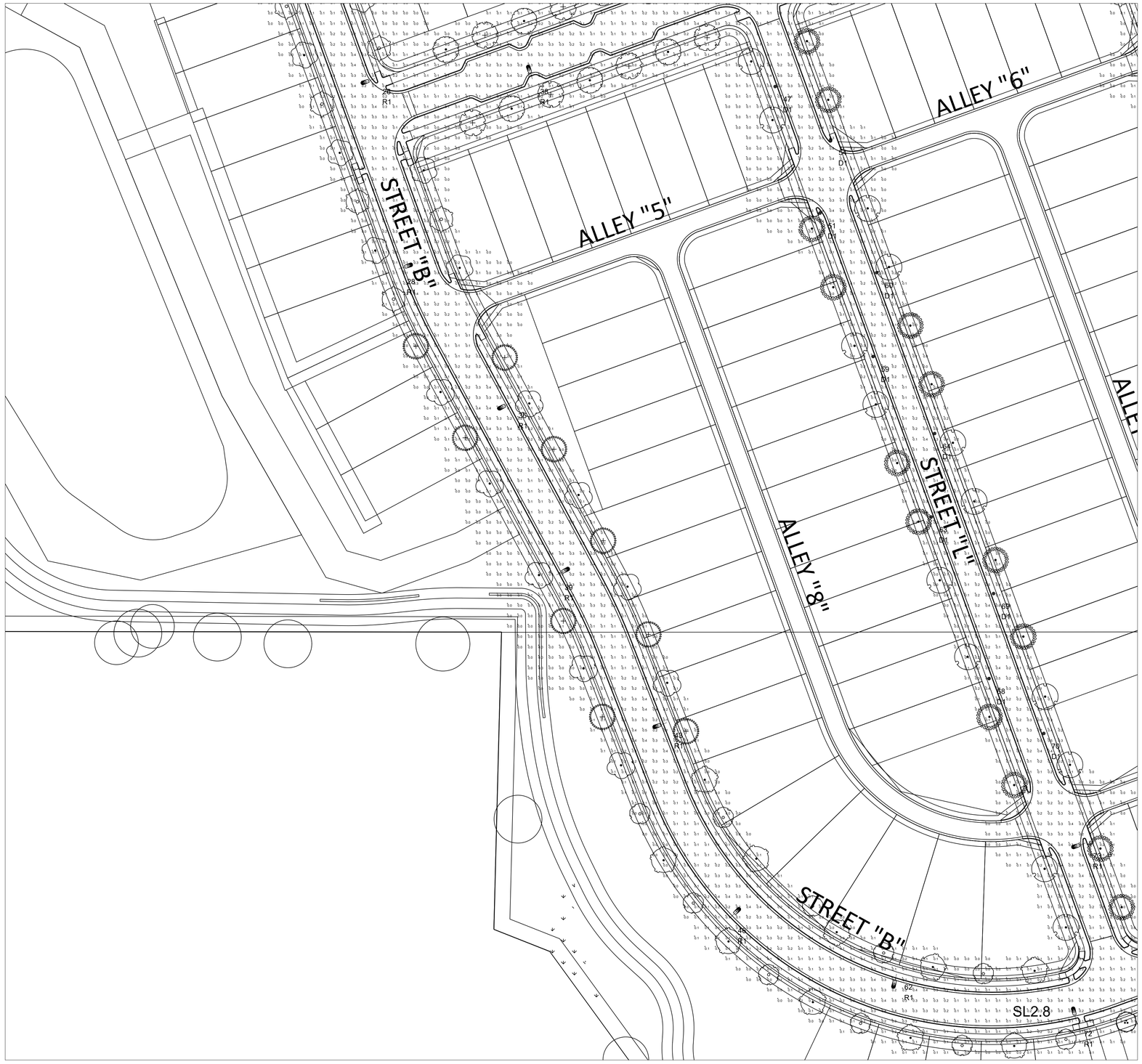

1 **PROPOSED PHOTOMETRIC DETAIL**
SCALE: 1"= 50'-0"

N

0' 50' 100'

_____
Date

_____
LDA, Town of Rolesville
Rolesville, North Carolina"

"I, _____, Review Officer of the Town of Rolesville, Wake County, certify that the map or plat to which this certification is affixed meets all statutory requirements for recording.

_____
Review Officer Date"

BASED ON THE INFORMATION PROVIDED, ALL DIMENSIONS AND LUMINAIRE LOCATIONS SHOWN REPRESENT RECOMMENDED POSITIONS. THE ENGINEER AND/OR ARCHITECT **MUST** DETERMINE APPLICABILITY OF THE LAYOUT TO EXISTING OR FUTURE FIELD CONDITIONS.

THE LIGHTING PATTERN REPRESENTS ILLUMINATION LEVELS CALCULATED FROM LABORATORY DATA TAKEN UNDER THE CONTROLLED CONDITIONS UTILIZING CURRENT INDUSTRY STANDARD LAMP RATINGS IN ACCORDANCE WITH ILLUMINATING ENGINEERING SOCIETY APPROVED METHODS. ACTUAL PERFORMANCE OF ANY MANUFACTURER'S LUMINAIRE MAY VARY DUE TO VARIATION IN ELECTRICAL VOLTAGE, TOLERANCE IN LAMPS, AND OTHER VARIABLE FIELD CONDITIONS.

FOR ADDITIONAL LIGHTING INFORMATION CONTACT:

On-Site Lighting & Survey, LLC

PH: 763.684.1548

On-Site Lighting & Survey, LLC

1111 HIGHWAY 25 NORTH
SUITE 201
BUFFALO MN 55313

PH:763.684.1548
FAX:763.682.9048

PROPERTY OWNER

McADAMS
The John R. McAdams Company, Inc.
2905 Meridian Parkway
Durham, NC 27713

phone 919. 361. 5000
fax 919. 361. 2269
license number: C-0293, C-187

www.mcadamsco.com

PROJECT INFO

PEARCE FARM

ROLESVILLE, NC

ENGINEER INFO

ENGINEER SEAL

REVISIONS

#	DESCRIPTION	INIT	DATE
1			
2			
3			
4			
5			
6			

SHEET DESCRIPTION

PROPOSED PHOTOMETRIC PLAN

PROJECT #

ISSUE DATE

07.24.2024

DESIGN LEVEL

2

AGI

C.D.HEANER

CAD

C.D.HEANER

SHEET#: **SL2.8**

REV #: **0**

1 **PROPOSED PHOTOMETRIC DETAIL**
SCALE: 1"= 50'-0"

N

0' 50' 100'

_____
Date

_____
LDA, Town of Rolesville
Rolesville, North Carolina"

"I, _____, Review Officer of the Town of Rolesville, Wake County, certify that the map or plat to which this certification is affixed meets all statutory requirements for recording.

_____
Review Officer Date"

BASED ON THE INFORMATION PROVIDED, ALL DIMENSIONS AND LUMINAIRE LOCATIONS SHOWN REPRESENT RECOMMENDED POSITIONS. THE ENGINEER AND/OR ARCHITECT **MUST** DETERMINE APPLICABILITY OF THE LAYOUT TO EXISTING OR FUTURE FIELD CONDITIONS.

THE LIGHTING PATTERN REPRESENTS ILLUMINATION LEVELS CALCULATED FROM LABORATORY DATA TAKEN UNDER THE CONTROLLED CONDITIONS UTILIZING CURRENT INDUSTRY STANDARD LAMP RATINGS IN ACCORDANCE WITH ILLUMINATING ENGINEERING SOCIETY APPROVED METHODS. ACTUAL PERFORMANCE OF ANY MANUFACTURER'S LUMINAIRE MAY VARY DUE TO VARIATION IN ELECTRICAL VOLTAGE, TOLERANCE IN LAMPS, AND OTHER VARIABLE FIELD CONDITIONS.

FOR ADDITIONAL LIGHTING INFORMATION CONTACT:

On-Site Lighting & Survey, LLC

PH: 763.684.1548

On-Site Lighting & Survey, LLC

1111 HIGHWAY 25 NORTH
SUITE 201
BUFFALO MN 55313

PH:763.684.1548
FAX:763.682.9048

PROPERTY OWNER

McADAMS
The John R. McAdams Company, Inc.
2905 Meridian Parkway
Durham, NC 27713

phone 919. 361. 5000
fax 919. 361. 2269
license number: C-0293, C-187

www.mcadamsco.com

PROJECT INFO

PEARCE FARM

ROLESVILLE, NC

ENGINEER INFO

ENGINEER SEAL

REVISIONS

#	DATE	INIT	DESCRIPTION
1			
2			
3			
4			
5			
6			

SHEET DESCRIPTION: **PROPOSED PHOTOMETRIC PLAN**

PROJECT #:

ISSUE DATE: **07.24.2024**

DESIGN LEVEL: **2**

AGI: **C.D.HEANER**

CAD: **C.D.HEANER**

SHEET#: **SL2.9** REV #: **0**

Date

LDA, Town of Rolesville
Rolesville, North Carolina"

"I, _____, Review Officer of the Town of Rolesville, Wake County, certify that the map or plat to which this certification is affixed meets all statutory requirements for recording.

Review Officer Date"

1 PROPOSED PHOTOMETRIC DETAIL
SCALE: 1"= 50'-0"

N

0' 50' 100'

BASED ON THE INFORMATION PROVIDED. ALL DIMENSIONS AND LUMINAIRE LOCATIONS SHOWN REPRESENT RECOMMENDED POSITIONS. THE ENGINEER AND/OR ARCHITECT **MUST** DETERMINE APPLICABILITY OF THE LAYOUT TO EXISTING OR FUTURE FIELD CONDITIONS.

THE LIGHTING PATTERN REPRESENTS ILLUMINATION LEVELS CALCULATED FROM LABORATORY DATA TAKEN UNDER THE CONTROLLED CONDITIONS UTILIZING CURRENT INDUSTRY STANDARD LAMP RATINGS IN ACCORDANCE WITH ILLUMINATING ENGINEERING SOCIETY APPROVED METHODS. ACTUAL PERFORMANCE OF ANY MANUFACTURER'S LUMINAIRE MAY VARY DUE TO VARIATION IN ELECTRICAL VOLTAGE, TOLERANCE IN LAMPS, AND OTHER VARIABLE FIELD CONDITIONS.

FOR ADDITIONAL LIGHTING INFORMATION CONTACT:

On-Site Lighting & Survey, LLC

PH: 763.684.1548

On-Site Lighting & Survey, LLC

1111 HIGHWAY 25 NORTH
SUITE 201
BUFFALO MN 55313

PH:763.684.1548
FAX:763.682.9048

PROPERTY OWNER

McAdams
The John R. McAdams Company, Inc.
2905 Meridian Parkway
Durham, NC 27713

phone 919. 361. 5000
fax 919. 361. 2269
license number: C-0293, C-187

www.mcadamsco.com

PROJECT INFO

PEARCE FARM

ROLESVILLE, NC

ENGINEER INFO

ENGINEER SEAL

REVISIONS

#	DATE	INIT	DESCRIPTION
1			
2			
3			
4			
5			
6			

SHEET DESCRIPTION: **PROPOSED PHOTOMETRIC PLAN**

PROJECT #:

ISSUE DATE: **07.24.2024**

DESIGN LEVEL: **2**

AGI: **C.D.HEANER**

CAD: **C.D.HEANER**

SHEET#: **SL2.10** **REV #**: **0**

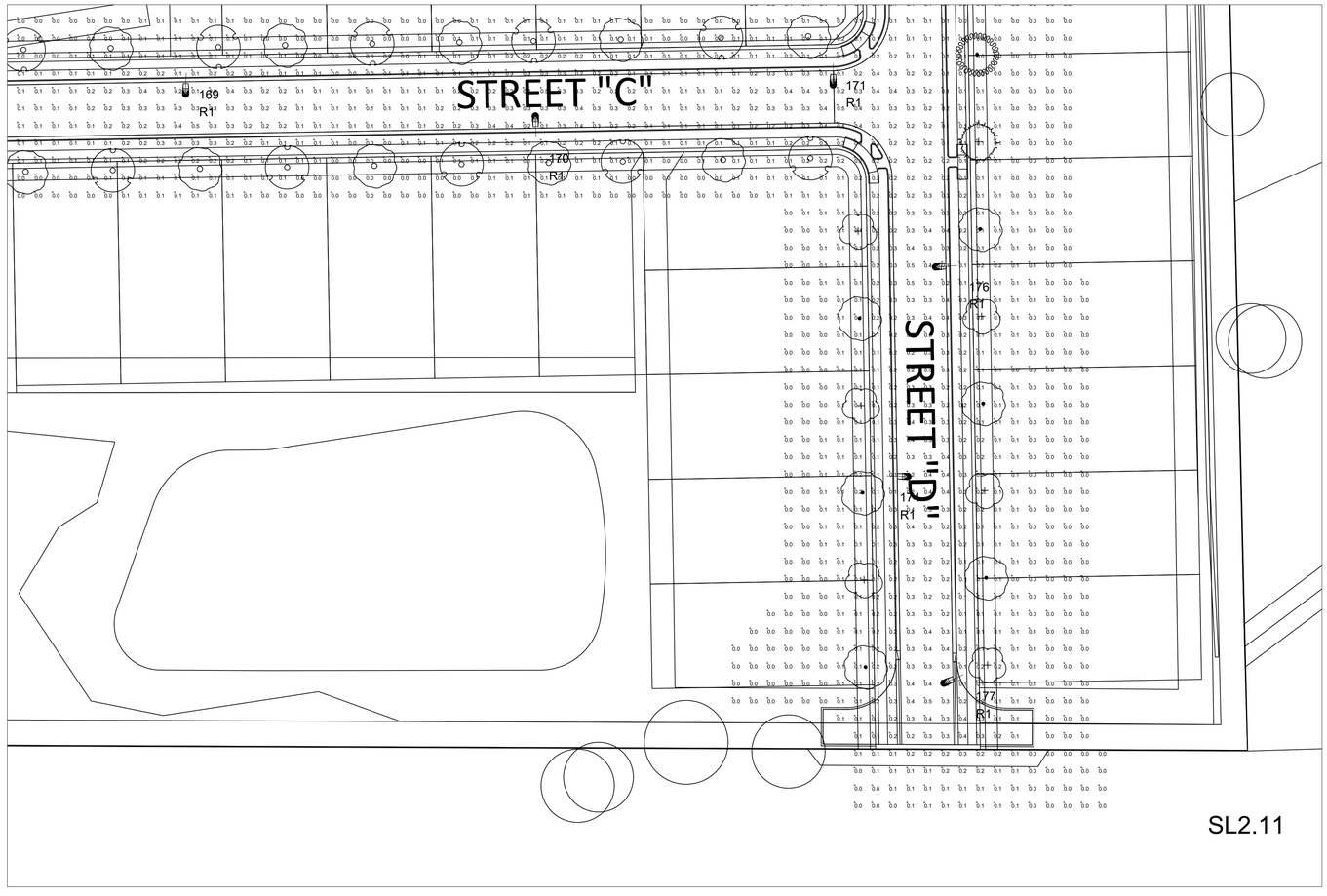

1 **PROPOSED PHOTOMETRIC DETAIL**
SCALE: 1"= 50'-0"

N

0' 50' 100'

_____
Date

_____
LDA, Town of Rolesville
Rolesville, North Carolina"

"I, _____, Review Officer of the Town of Rolesville, Wake County, certify that the map or plat to which this certification is affixed meets all statutory requirements for recording.

_____
Review Officer Date"

BASED ON THE INFORMATION PROVIDED, ALL DIMENSIONS AND LUMINAIRE LOCATIONS SHOWN REPRESENT RECOMMENDED POSITIONS. THE ENGINEER AND/OR ARCHITECT **MUST** DETERMINE APPLICABILITY OF THE LAYOUT TO EXISTING OR FUTURE FIELD CONDITIONS.

THE LIGHTING PATTERN REPRESENTS ILLUMINATION LEVELS CALCULATED FROM LABORATORY DATA TAKEN UNDER THE CONTROLLED CONDITIONS UTILIZING CURRENT INDUSTRY STANDARD LAMP RATINGS IN ACCORDANCE WITH ILLUMINATING ENGINEERING SOCIETY APPROVED METHODS. ACTUAL PERFORMANCE OF ANY MANUFACTURER'S LUMINAIRE MAY VARY DUE TO VARIATION IN ELECTRICAL VOLTAGE, TOLERANCE IN LAMPS, AND OTHER VARIABLE FIELD CONDITIONS.

FOR ADDITIONAL LIGHTING INFORMATION CONTACT:

On-Site Lighting & Survey, LLC

PH: 763.684.1548

On-Site Lighting & Survey, LLC

1111 HIGHWAY 25 NORTH
SUITE 201
BUFFALO MN 55313

PH:763.684.1548
FAX:763.682.9048

PROPERTY OWNER

McAdams
The John R. McAdams Company, Inc.
2905 Meridian Parkway
Durham, NC 27713

phone 919. 361. 5000
fax 919. 361. 2269
license number: C-0293, C-187

www.mcadamsco.com

PROJECT INFO

PEARCE FARM

ROLESVILLE, NC

ENGINEER INFO

ENGINEER SEAL

REVISIONS

#	DATE	INIT	DESCRIPTION
1			
2			
3			
4			
5			
6			

SHEET DESCRIPTION: **PROPOSED PHOTOMETRIC PLAN**

PROJECT #:

ISSUE DATE: **07.24.2024**

DESIGN LEVEL: **2**

AGI: **C.D.HEANER**

CAD: **C.D.HEANER**

SHEET#: **SL2.11** REV #: **0**

1 **PROPOSED PHOTOMETRIC DETAIL**
SCALE: 1"= 50'-0"

N

0' 50' 100'

BASED ON THE INFORMATION PROVIDED, ALL DIMENSIONS AND LUMINAIRE LOCATIONS SHOWN REPRESENT RECOMMENDED POSITIONS. THE ENGINEER AND/OR ARCHITECT **MUST** DETERMINE APPLICABILITY OF THE LAYOUT TO EXISTING OR FUTURE FIELD CONDITIONS.

THE LIGHTING PATTERN REPRESENTS ILLUMINATION LEVELS CALCULATED FROM LABORATORY DATA TAKEN UNDER THE CONTROLLED CONDITIONS UTILIZING CURRENT INDUSTRY STANDARD LAMP RATINGS IN ACCORDANCE WITH ILLUMINATING ENGINEERING SOCIETY APPROVED METHODS. ACTUAL PERFORMANCE OF ANY MANUFACTURER'S LUMINAIRE MAY VARY DUE TO VARIATION IN ELECTRICAL VOLTAGE, TOLERANCE IN LAMPS, AND OTHER VARIABLE FIELD CONDITIONS.

FOR ADDITIONAL LIGHTING INFORMATION CONTACT:

On-Site Lighting & Survey, LLC

PH: 763.684.1548

_____
Date

_____
LDA, Town of Rolesville
Rolesville, North Carolina"

"I, _____, Review Officer of the Town of Rolesville, Wake County, certify that the map or plat to which this certification is affixed meets all statutory requirements for recording.

_____
Review Officer Date"

On-Site Lighting & Survey, LLC

1111 HIGHWAY 25 NORTH
SUITE 201
BUFFALO MN 55313

PH:763.684.1548
FAX:763.682.9048

PROPERTY OWNER

McAdams
The John R. McAdams Company, Inc.
2905 Meridian Parkway
Durham, NC 27713

phone 919. 361. 5000
fax 919. 361. 2269
license number: C-0293, C-187

www.mcadamsco.com

PROJECT INFO

PEARCE FARM

ROLESVILLE, NC

ENGINEER INFO

ENGINEER SEAL

REVISIONS

#	DATE	INIT	DESCRIPTION
1			
2			
3			
4			
5			
6			

SHEET DESCRIPTION: **PROPOSED PHOTOMETRIC PLAN**

PROJECT #:

ISSUE DATE: **07.24.2024**

DESIGN LEVEL: **2**

AGI: **C.D.HEANER**

CAD: **C.D.HEANER**

SHEET#: **SL2.12** REV #: **0**

Autobahn Series ATB0
Roadway Lighting

Consistent with LEED® goals for light pollution reduction

PRODUCT OVERVIEW

Applications:

Roadways
Off ramps
Residential streets
Parking lots

DIMENSIONS

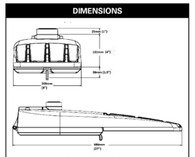

Effective Projected Area (EPA): The EPA for the ATB0 is 0.76 sq. ft.
Approx. Wt.: ~ 14 lbs.

Features:

OPTICAL

The Autobahn's new molded silicone optics provide exceptional performance. Silicone optics are superior to other polymeric materials in the areas of: optical efficiency, thermal performance, and reduction in dirt accumulation, all of which can lead to long term lumen degradation and a shift in optical distribution. Also, because silicone allows for the molding of fine details as well as thick sections, it produces the most crisp, clean and well-defined lighting distributions available. Silicone optics paired with modern LED's allow the Autobahn to take full advantage of both technologies.

Same Light: Performance is comparable to 100 - 400W HPS roadway luminaires.

White Light: Correlated color temperature - 4000K, or optional 2700K, 3000K or 5000K, all 70 CRI minimum.

Unique IP66-rated LED light engines provided 0% uplight and restrict backlight to within sidewalk depth, providing optimal application coverage and optimal pole spacing. Available in Type II, III, IV, and V roadway distributions.

ELECTRICAL

Expected Life: LED light engines are rated >100,000 hours at 25°C, L70. Electronic driver has an expected life of 100,000 hours at a 25°C ambient.

Lower Energy: Saves an expected of 40-60% over comparable HID luminaires.

Robust Surge Protection: Two different surge protection options provide a minimum of ANSI C136.2 10kV/5kA protection. 20kV/10kA protection is also available.

Luminaire ships with a 0-10v dimmable driver. Luminaire is continuous and step dimming capable via PO option or controls installed on P7 photocontrol receptacle option.

MECHANICAL

Includes standard AEL lineman-friendly features such as tool-less entry, 3 station terminal block and quick disconnects. Bubble level located inside the electrical compartment for easily leveling at installation.

Rugged die-cast aluminum housing and door are polyester powder-coated for durability and corrosion resistance. Rigorous five-stage pre-treating and painting process yields a finish that achieves a scribe creepage rating of 7 (per ASTM D1654) after over 5000 hours exposure to salt fog chamber (operated per ASTM B117).

Mast arm mount is adjustable for arms from 1-1/4" to 2" (1-5/8" to 2-3/8" O.D.) diameter. Provides a 3G vibration rating per ANSI C136.31

Wildlife shield is cast into the housing (not a separate piece).

STANDARDS

DesignLights Consortium® (DLC) qualified product. Not all versions of this product may be DLC qualified. Please check the DLC Qualified Products List at www.designlights.org/QPL to confirm which versions are qualified.

Color temperatures of ≤ 3000K must be specified for International Dark-Sky Association certification.

Rated for -40°C to 40°C ambient
CSA Certified to U.S. and Canadian standards
Complies with ANSI: C136.2, C136.10, C136.14, C136.31, C136.15, C136.37

CONTROLS

NEMA 3 pin photocontrol receptacle is standard, with the Acuity designed ANSI standard 7 pin receptacle optionally available.

Premium solid state locking style photocontrol - PCSS (10 year rated life) Extreme long life solid state locking style photocontrol - PCLL (20 year rated life).

Optional onboard Adjustable Output module allows the light output and input wattage to be modified to meet site specific requirements, and also can allow a single fixture to be flexibly applied in many different applications.

Note: Specifications subject to change without notice. Actual performance may differ as a result of end-user environment and application.

© 2014-2022 Acuity Brands Lighting, Inc. ATB0 02/03/22

1 POLE MOUNT FIXTURE TYPE R1
SPECIFICATION SHEET

Hartsfield AcornLED
Series HTFL

PRODUCT OVERVIEW

IP65

DIMENSIONS

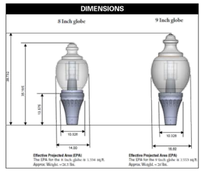

FINAL DIMENSIONS

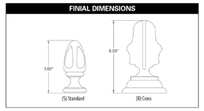

Features:

MECHANICAL

Heavy grade, A360 cast aluminum (<1% copper)

Optional internal or external NEMA twist lock photocontrol receptacle. Housing contains a tempered glass window to allow light to reach the cell for internal versions

Mount to slip-fitter that will accept 3" high by 2-7/8" to 3-1/8" O.D. pole tenon

Super Durable polyester powder coat finish with rigorous pretreatment process meets 5,000 hour salt spray rating per ASTM B117

Luminaire is IP65 rated

Mounts to 3" x 3" pole top tenons

Base and optical ship separately

ELECTRICAL

All surge protection meets ANSI/IEEE C62.41.2 10kV/10kA

Standard SPD meets 10kV/5kA per ANSI C136.2-2015

20kV SPD Option meets 20kV/10kA per ANSI C136.2-2015

Quick disconnect connectors for ease of installation and maintenance

LED drivers meet maximum total harmonic distortion

(THD) of 20% and are RoHS compliant. Minimum operating temperature is -40°C. Driver life has minimum estimated life of 100,000 hours at 25°C ambient.

120-277V 50/60 Hz and 347-480V 60 Hz

OPTICAL

Color temperature options of 2700K, 3000K, 4000K, and 5000K CCT with 70 CRI minimum

Optical distributions: Non-Prismatic Type III & Type V in both Polycarbonate and Acrylic

8" and 9" Globe Options

L80 at 100,200 hours at 40°C ambient

CONTROL OPTIONS

Adjust Output (AO) module – Onboard device that adjusts the light output and input wattage to meet site specific requirements. The AO module is preset at the factory to position number 8 (see chart).

Long Life Photocontrol (PCLL) – 20 Year Life

3 pin receptacle is standard. 7 pin (P7) or no receptacle (NR) are optional

TESTING / COMPLIANCE

UL 1598 – Wet Locations Safety Listing

Suitable for ambient temperatures -40°C – 40°C

DesignLights Consortium® (DLC) qualified product. Not all versions of this product may be DLC qualified. Please check the DLC Qualified Products List at www.designlights.org/QPL to confirm which versions are qualified.

US Patent No. D910,229

Note: Specifications subject to change without notice.
Hartsfield AcornLED Series HTFL

2 POLE MOUNT FIXTURE TYPE D1
SPECIFICATION SHEET

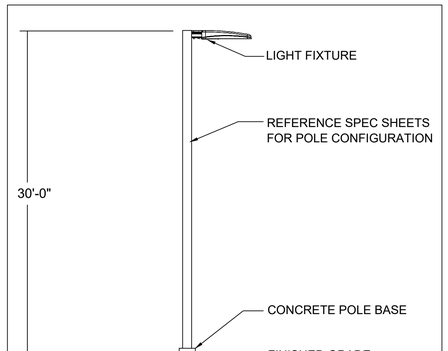

3 POLE DETAIL R1
SCALE: NTS

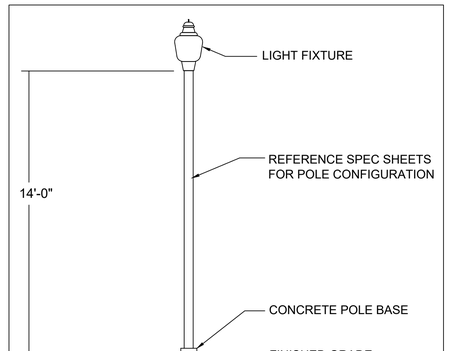

4 POLE DETAIL D1
SCALE: NTS

_____
Date

_____
LDA, Town of Rolesville
Rolesville, North Carolina"

"I, _____, Review Officer of the Town of Rolesville, Wake County, certify that the map or plat to which this certification is affixed meets all statutory requirements for recording.

_____
Review Officer Date"

BASED ON THE INFORMATION PROVIDED, ALL DIMENSIONS AND LUMINAIRE LOCATIONS SHOWN REPRESENT RECOMMENDED POSITIONS. THE ENGINEER AND/OR ARCHITECT **MUST** DETERMINE APPLICABILITY OF THE LAYOUT TO EXISTING OR FUTURE FIELD CONDITIONS.

THE LIGHTING PATTERN REPRESENTS ILLUMINATION LEVELS CALCULATED FROM LABORATORY DATA TAKEN UNDER THE CONTROLLED CONDITIONS UTILIZING CURRENT INDUSTRY STANDARD LAMP RATINGS IN ACCORDANCE WITH ILLUMINATING ENGINEERING SOCIETY APPROVED METHODS. ACTUAL PERFORMANCE OF ANY MANUFACTURER'S LUMINAIRE MAY VARY DUE TO VARIATION IN ELECTRICAL VOLTAGE, TOLERANCE IN LAMPS, AND OTHER VARIABLE FIELD CONDITIONS.

FOR ADDITIONAL LIGHTING INFORMATION CONTACT:

On-Site Lighting & Survey, LLC
PH: 763.684.1548

On-Site Lighting & Survey, LLC

1111 HIGHWAY 25 NORTH
SUITE 201
BUFFALO MN 55313

PH:763.684.1548
FAX:763.682.9048

PROPERTY OWNER
McADAMS
The John R. McAdams Company, Inc.
2905 Meridian Parkway
Durham, NC 27713

phone 919. 361. 5000
fax 919. 361. 2269
license number: C-0293, C-187

www.mcadamsco.com

PROJECT INFO
PEARCE FARM
ROLESVILLE, NC

ENGINEER INFO

ENGINEER SEAL

REVISIONS

#	DESCRIPTION	INIT	DATE
1			
2			
3			
4			
5			
6			

SHEET DESCRIPTION: **SPECIFICATION SHEETS**

PROJECT #:

ISSUE DATE: **07.24.2024**

DESIGN LEVEL: **2**

AGI: **C.D.HEANER**

CAD: **C.D.HEANER**

SHEET#: **SL2.13** REV #: **0**